Assembly Instructions

Assembly Instructions

INSTALLATION GUIDE

ONE PERSON ASSEMBLY: 15 MINUTES (APPROXIMATE)
TOOLS REQUIRED:ALLEN WRENCH (PROVIDED)

BEFORE ASSEMBLY

1. Remove all packaging materials, staples and packing straps from the carton.
2. Confirm with Parts Checklist in Page 3.

ATTENTION

1. Leave sufficient room for assembly.
2. Do not assemble on the ground that may hurt the product.
3. Do not over-tighten any fittings as it may cause damage.
4. DO NOT USE POWER TOOLS TO ASSEMBLE THIS PRODUCT.
5. Do not sit or stand on it before the assembly is complete.

DAILY MAINTENANCE

1. Recommended for indoor use only.
2. Wipe with a soft, dry cloth. Keep away from abrasives and household cleaners.
3. Check all the fittings periodically and re-tighten if necessary. Do not use the product if any part is damaged or broken.

Office Desk Chair Limited Warranty

Them office desk chairs are warranted from the date of purchase against failure due to material and workmanship as follows:

1 YEAR on all unmovable metal parts;

1 YEAR on upholstered PU leather and foam;

1 YEAR on component parts including control mechanisms, gas cylinder, wood, plastic parts, base and casters.

To make a warranty claim, please contact us with model number, purchase proof and problem descriptions.

Problem verified, we will:
a) Send a replacement.
b) Send a new product if necessary, customer need to return the original one to our warehouse. Return freight will be undertaken by us.

RETURN POLICY
30 days return policy after receiving is provided. our offers prepaid return labels for product quality issues.
）Original Box returned）

PARTS CHECKLIST

Ax5	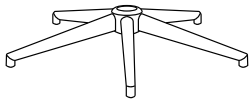 Bx1	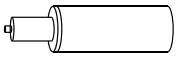 Cx1 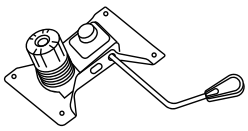 Dx1	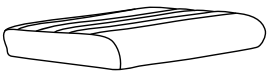 Ex1	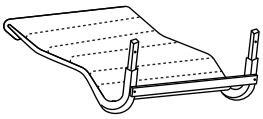 Fx1	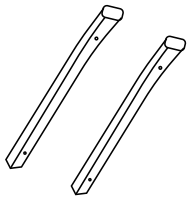 G (2x)

Hx1	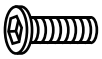 Ix2	Jx4	Kx4	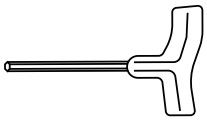 Lx1

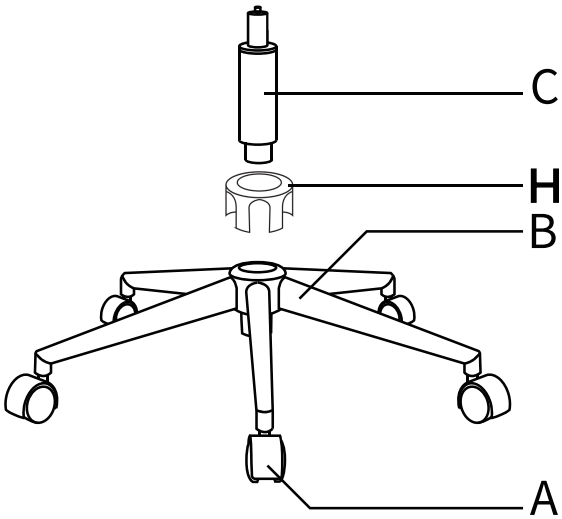

Step 1: Insert the Casters **Ax5** into the Five-star Base **B**.
Press the base cover **H** into the middle of the five star base
.Insert the Gas Cylinder **C** into the center of the Five-star Base **B**.

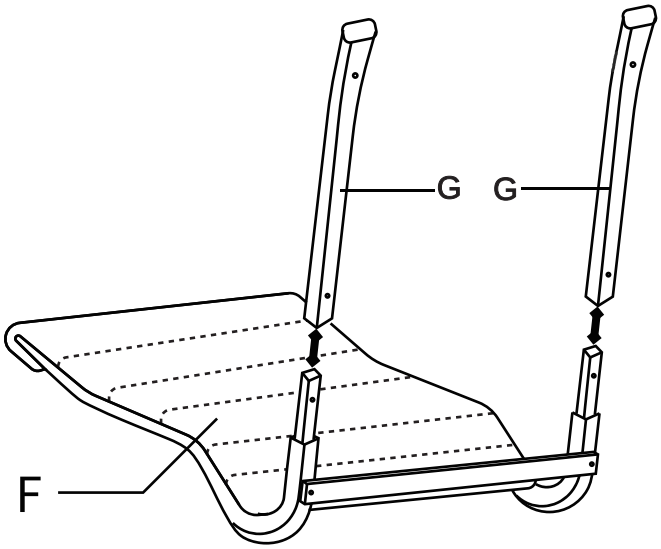

Step 2: Insert Brackets **G** into the bottom of the Chair Back **F** as shown in the picture.

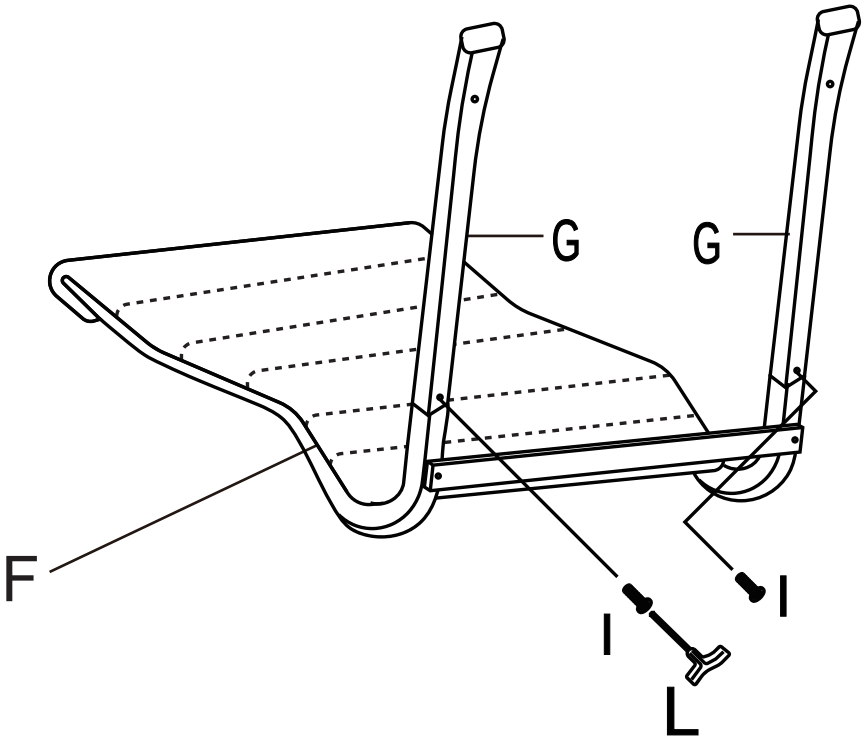

Step 3: Fix Brackets **G** with the Chair Back **F** with Screws **Ix2** and finish with Allen Wrench **L**.

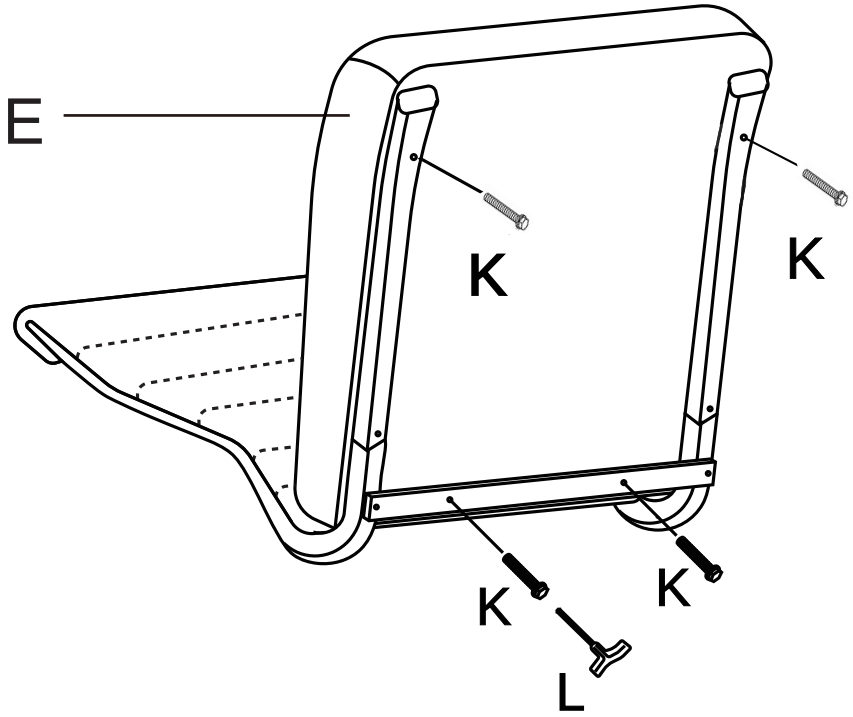

Step 4: Attach Seat **E** with Assembled Seat Back via Screws **Kx4** as shown in the picture and finish with Allen Wrench **L**.

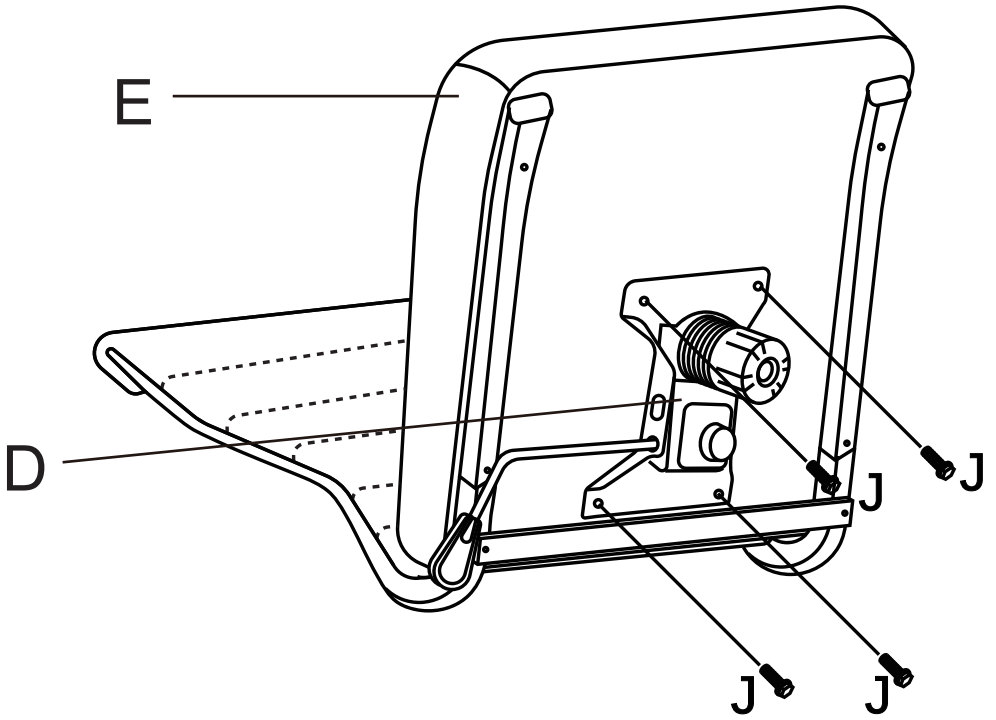

Step 5: Assemble the Tilt Mechanism **D** with the Seat **E** via Screws **Jx4** and finish with Allen Wrench **L**.

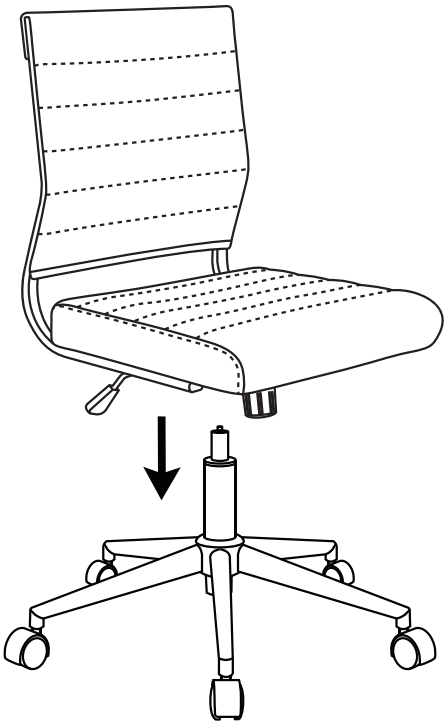

Step 6: Attach the assembled seat to the assembled base by aligning the hole in the Tilt Mechanism to the top of the Gas Cylinder.
Press the seat firmly.

Step 7: Enjoy Your New Chair!

Parts Missing?

We are working on delivering you a perfect product,
but sometimes the parts may still be damaged or lost in transit.

If any parts are damaged or lost, please contact us immediately,
we will give you a perfect solution.