# Assembly Instruction

| | | | |
|---|---|---|---|
| A*1 | 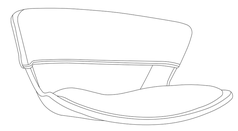 | D*1 | 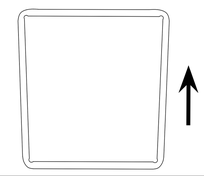 |
| B*1 | | E*10+1EXT | 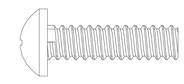 M6*30MM |
| C*1 | | G*1 | M6 |

## STEP 1

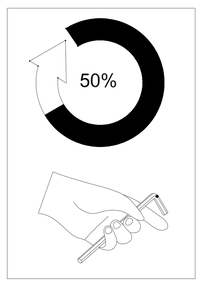


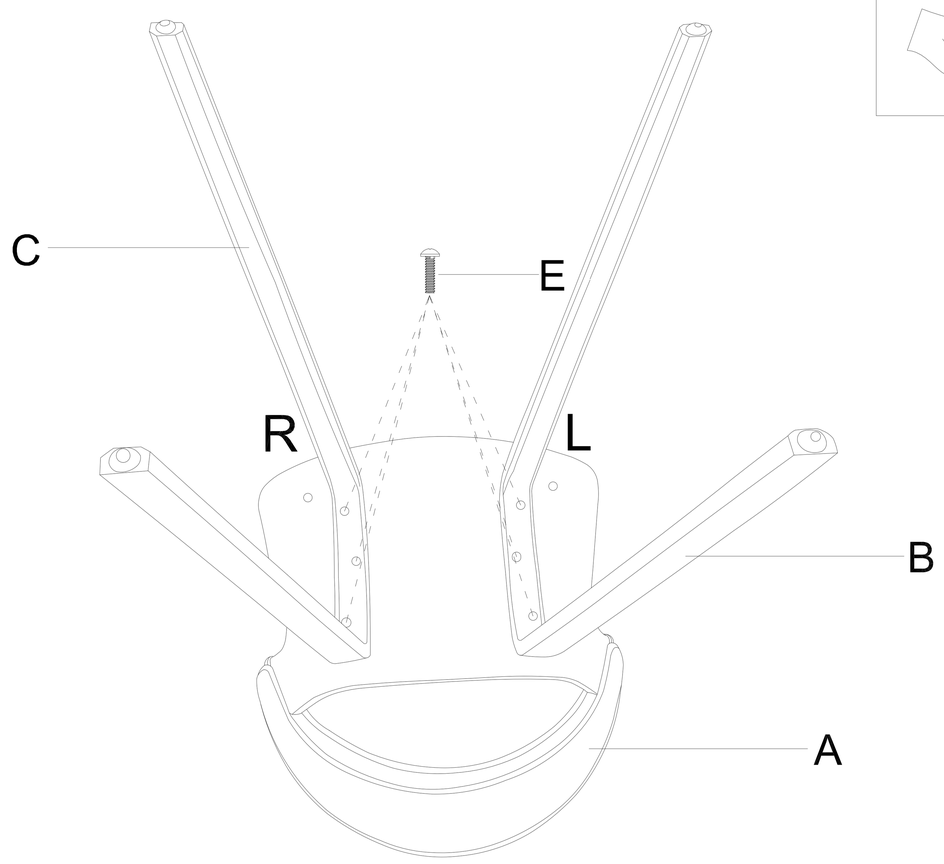


## STEP 2

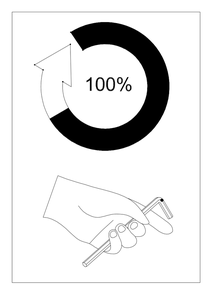


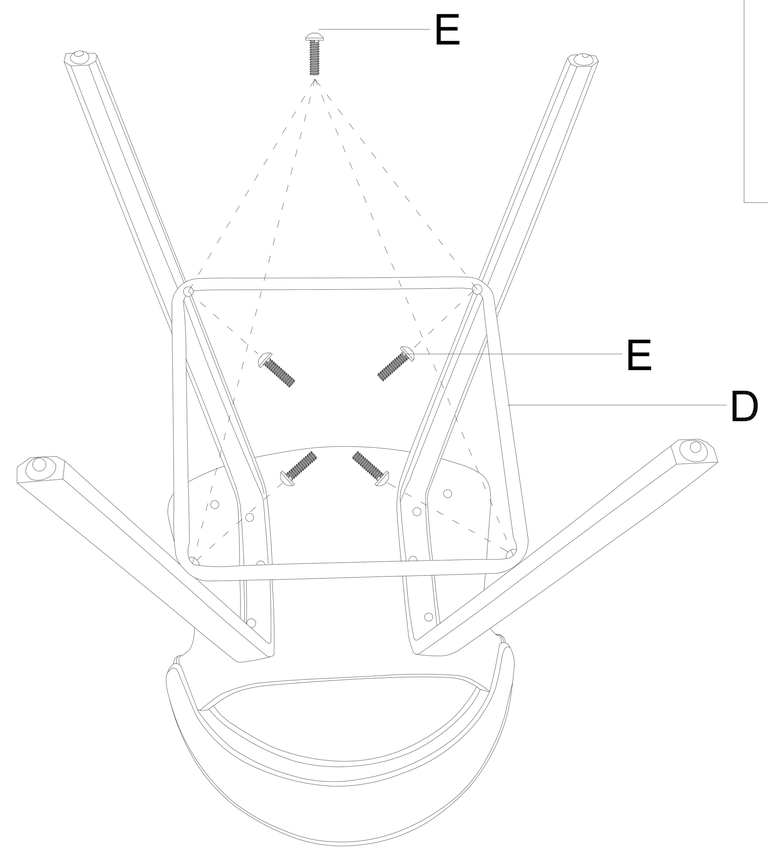


Fasten All screws indicate on Step 1& Step2.

## STEP 3

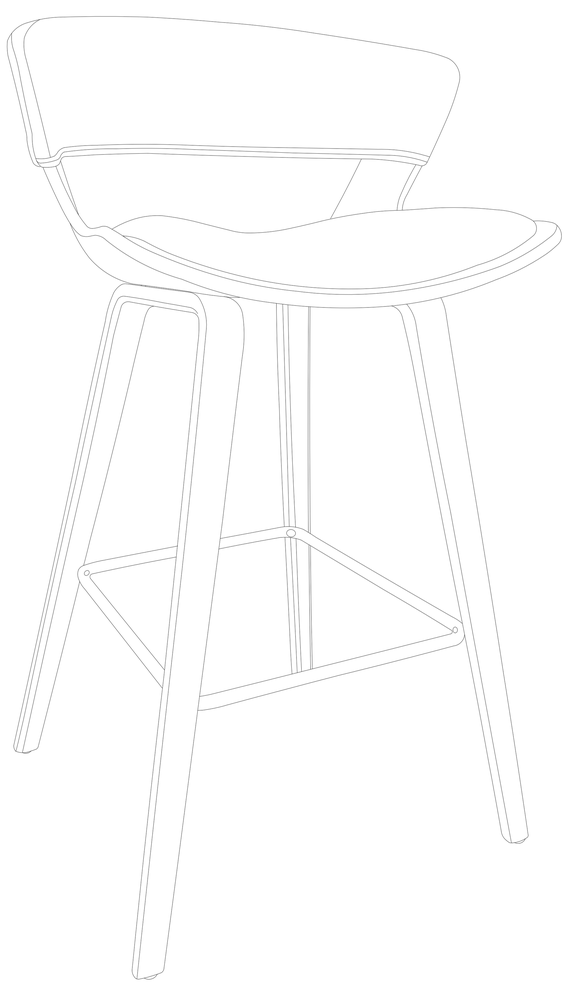

## STEP 4

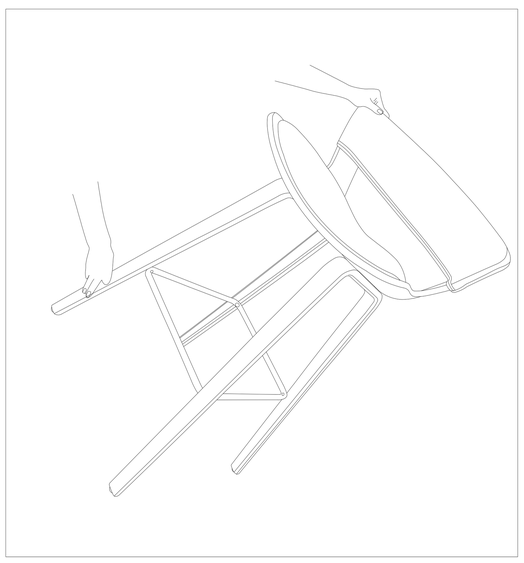

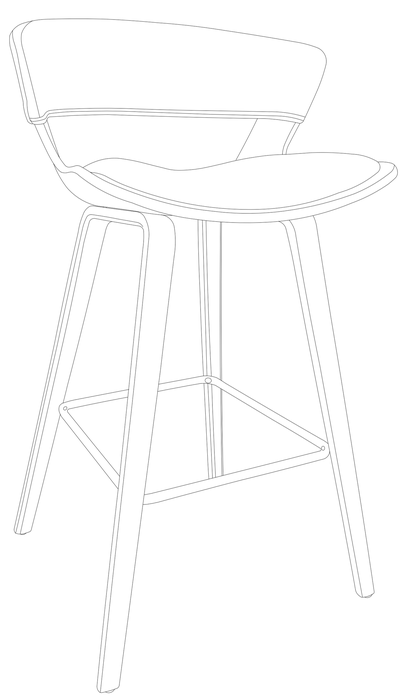

NOTE:

Step4,if the foot is uneven,press the right foot.