Storage Platform Bed-F

Assembly Instructions

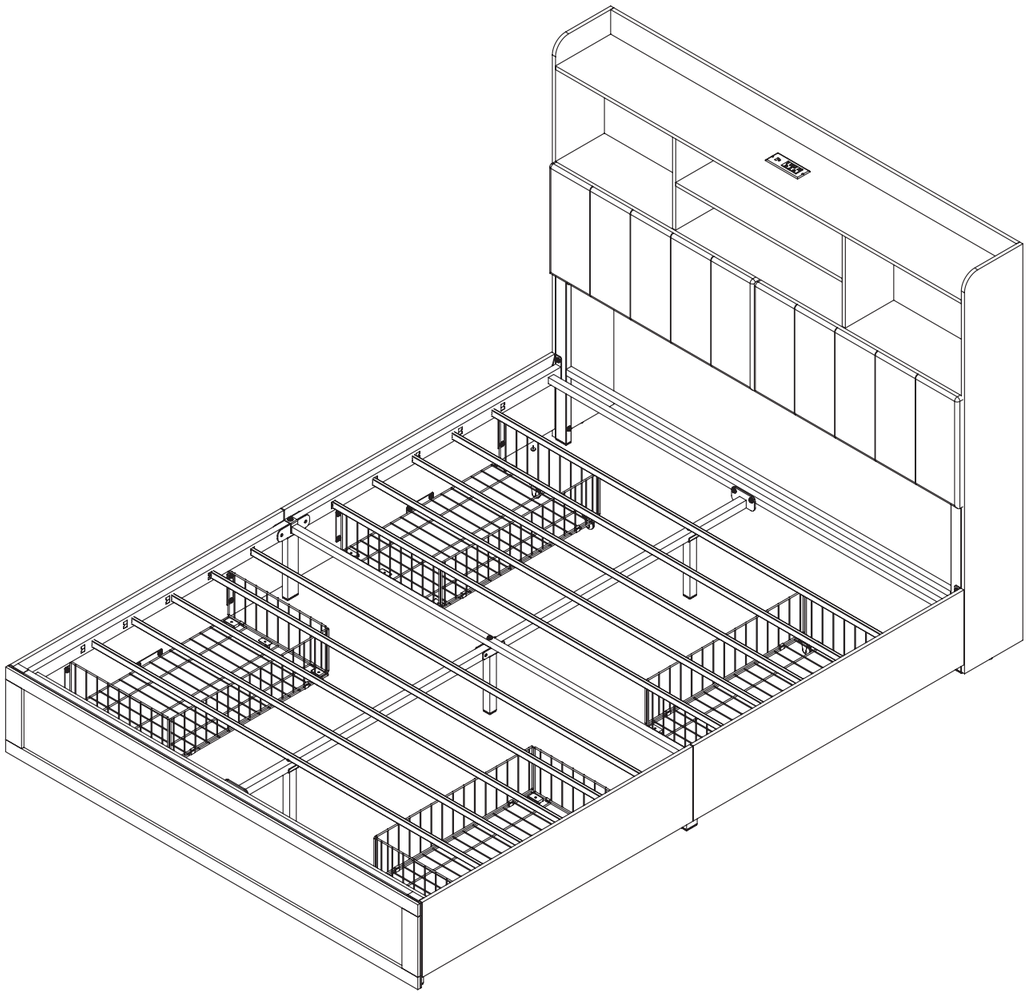

Dear Customers,

Thank you for purchasing our product. Please read this instruction manual carefully after receiving this product. It will help you assemble this product quickly, safely and correctly. You can keep this manual for future reference.

MADE IN CHINA

ASSEMBLY INSTRUCTIONS

! IMPORTANT

Please follow the instruction manuals and use a pad to protect the product during your assembly.

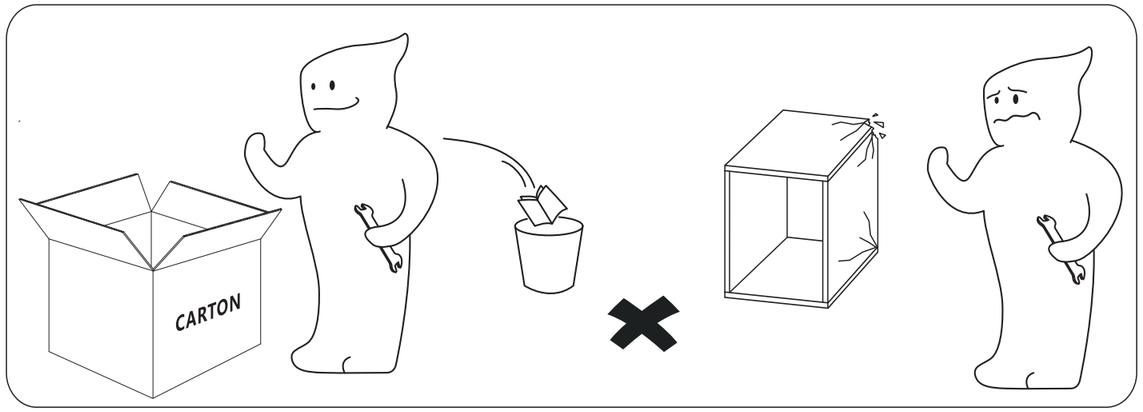

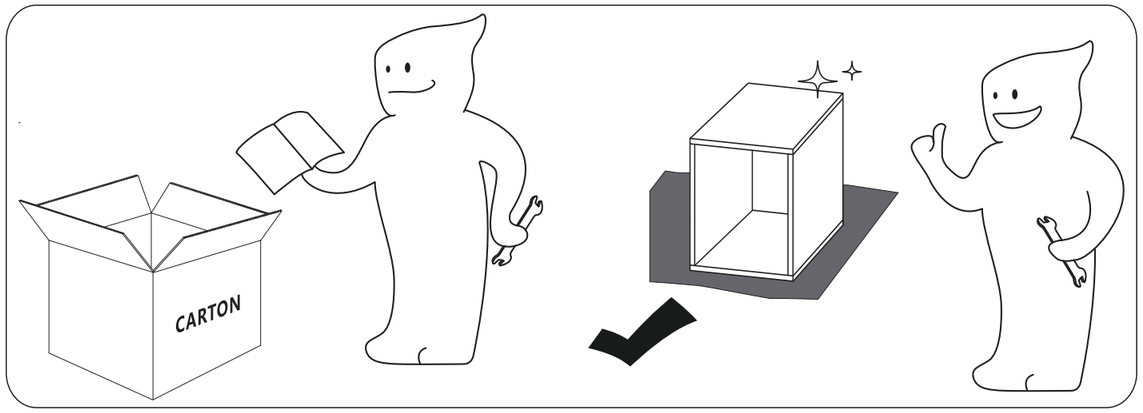

Note:

1. Should be assembled on flat ground to keep balance.

2. Before completing the installation, do not tighten the screws.

For easier and better assembly, **2** or more adults are required.

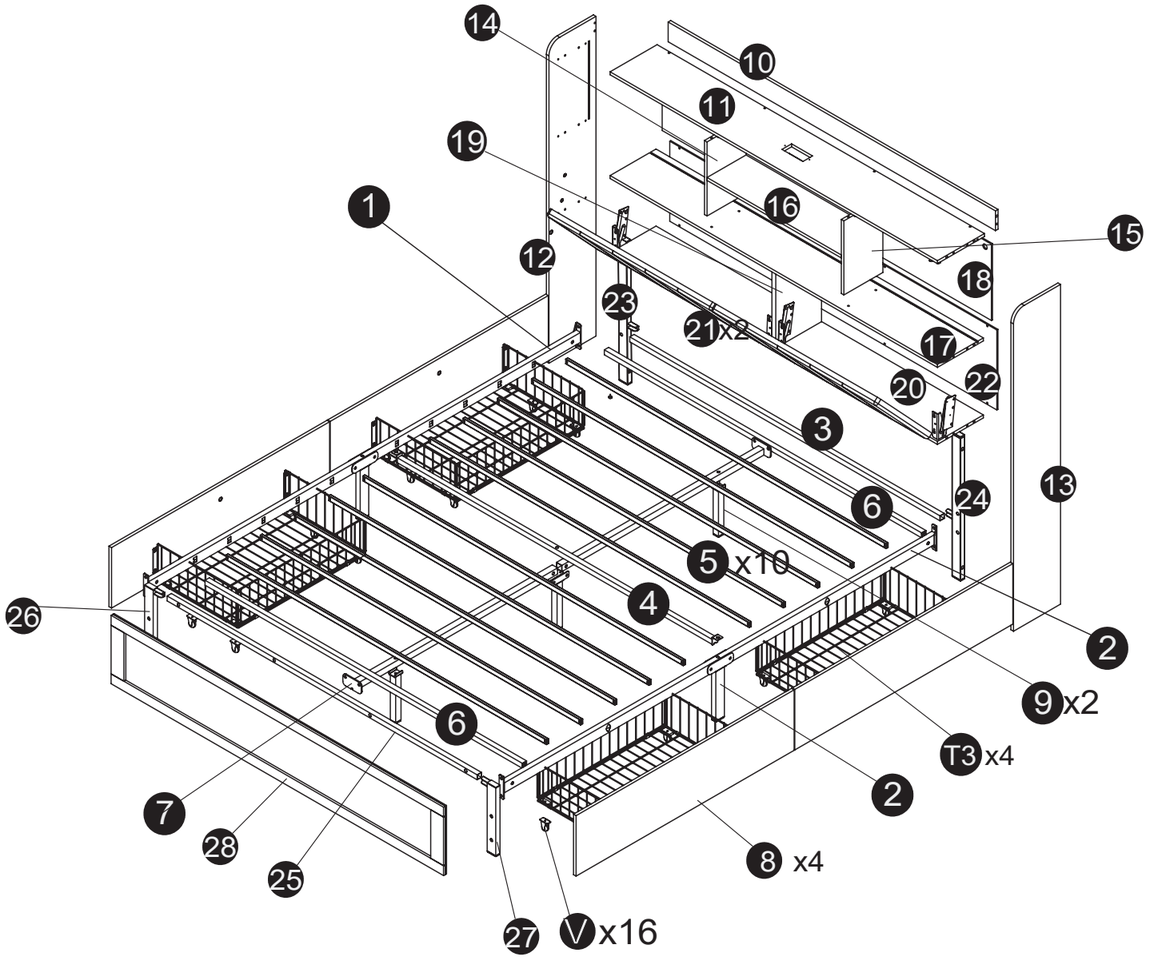

The box 1

3 1PC	4 1PC	5 10PCS
6 2PCS	9 2PCS	10 1PC
11 1PC	12 1PC	13 1PC
17 1PC	18 1PC	20 1PC
21 1PC	22 1PC	23 NUT 1PC
24 NUT 1PC	25 1PC	26 NUT 1PC
27 NUT 1PC	28 1PC	T3 4PCS

The box 1 continued

1 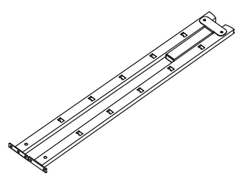 1PC	2 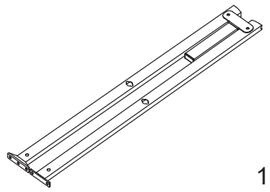 1PC	7 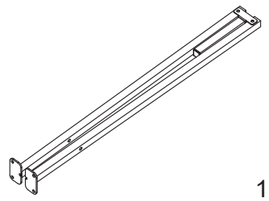 1PC
8 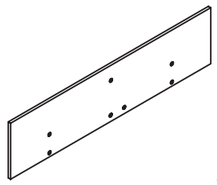 4PCS	14 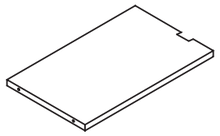 1PC	15 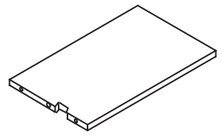 1PC
16 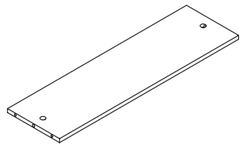 1PC	19 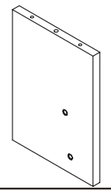 1PC	V  16PCS
J1 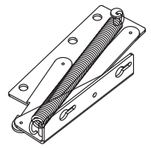 2PCS	J2 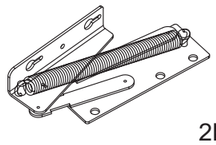 2PCS	

The box 1 continued

A  ST3.2x12 4PCS	B  ST4.2x12 2PCS	C  M8x12 white zinc 24PCS
D  M8x14 Colored Zinc 4PCS	E  M8x18 12PCS	F 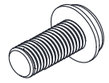 M8x30 12PCS
G  M8x40 6PCS	H  M8x50 white zinc 4PCS	I 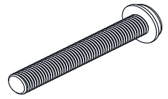 M8x60 3PCS
J  M6x10 16PCS	K 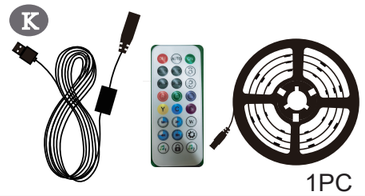 1PC	M 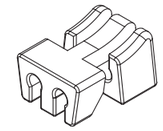 8PCS
N 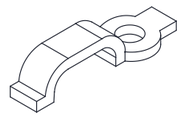 4PCS	O  M4x10 16PCS	P 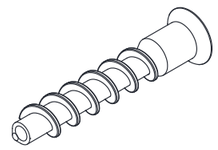 M5x30 19PCS
Q 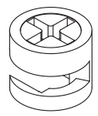 φ15x9.5 19PCS	R 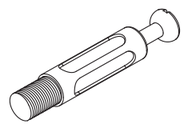 φ7x40 19PCS	S 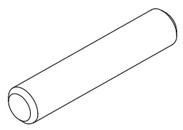 φ6x40 24PCS
T 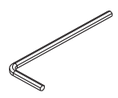 M4 1PC	W 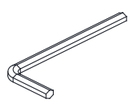 M5 1PC	Y1 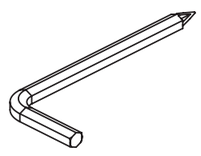 M8 1PC

The box 1 continued

Y2 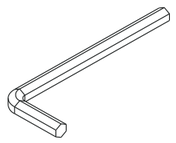 1PC	Z 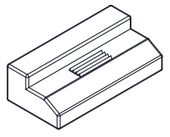 20PCS	U 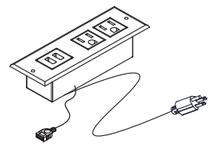 1PC

Ruler - Use this ruler to help correctly identify the screws

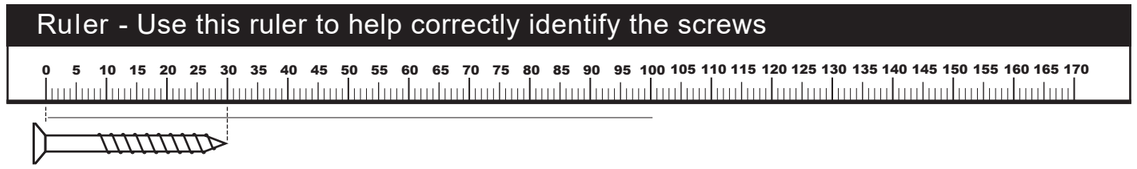

The lenath of the screw is measured from the rod part excluding the screw cap (30mm screw shown）

Please make sure to check that all screws are tightened after completing the entire installation.

1

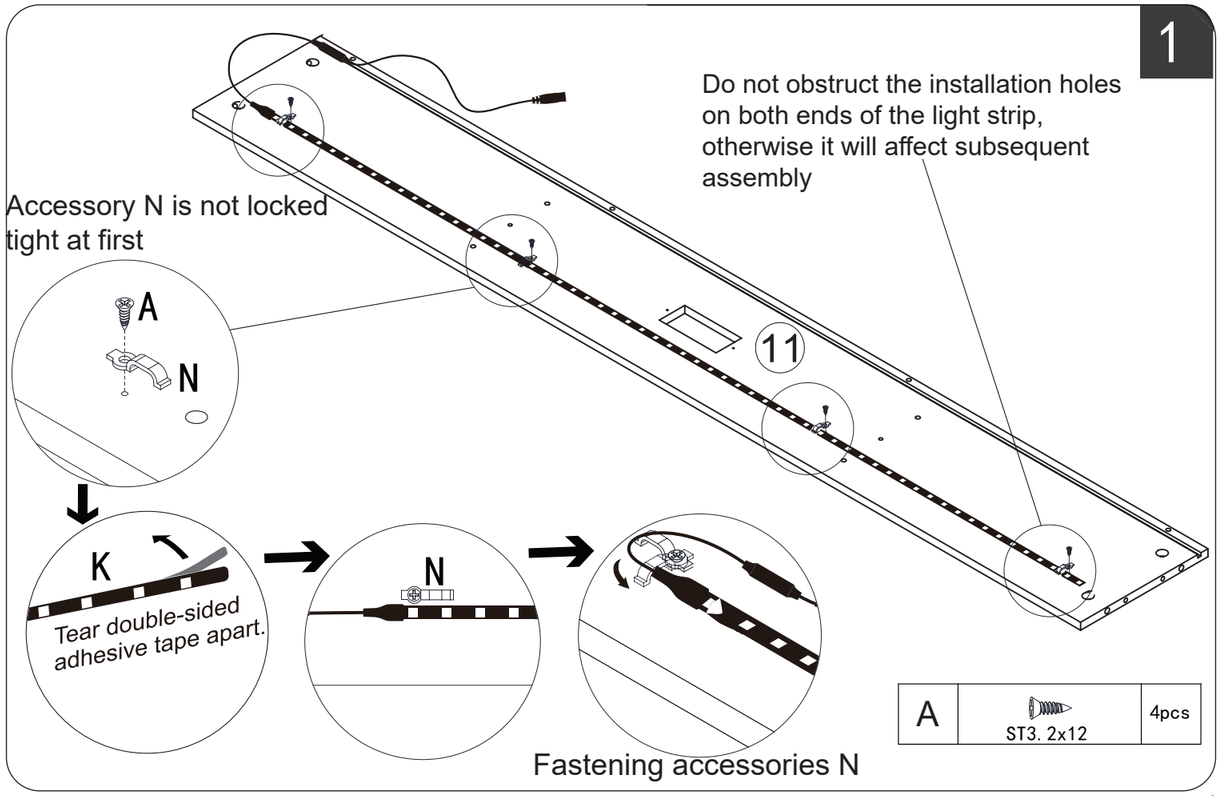

A	ST3. 2x12	4pcs

2

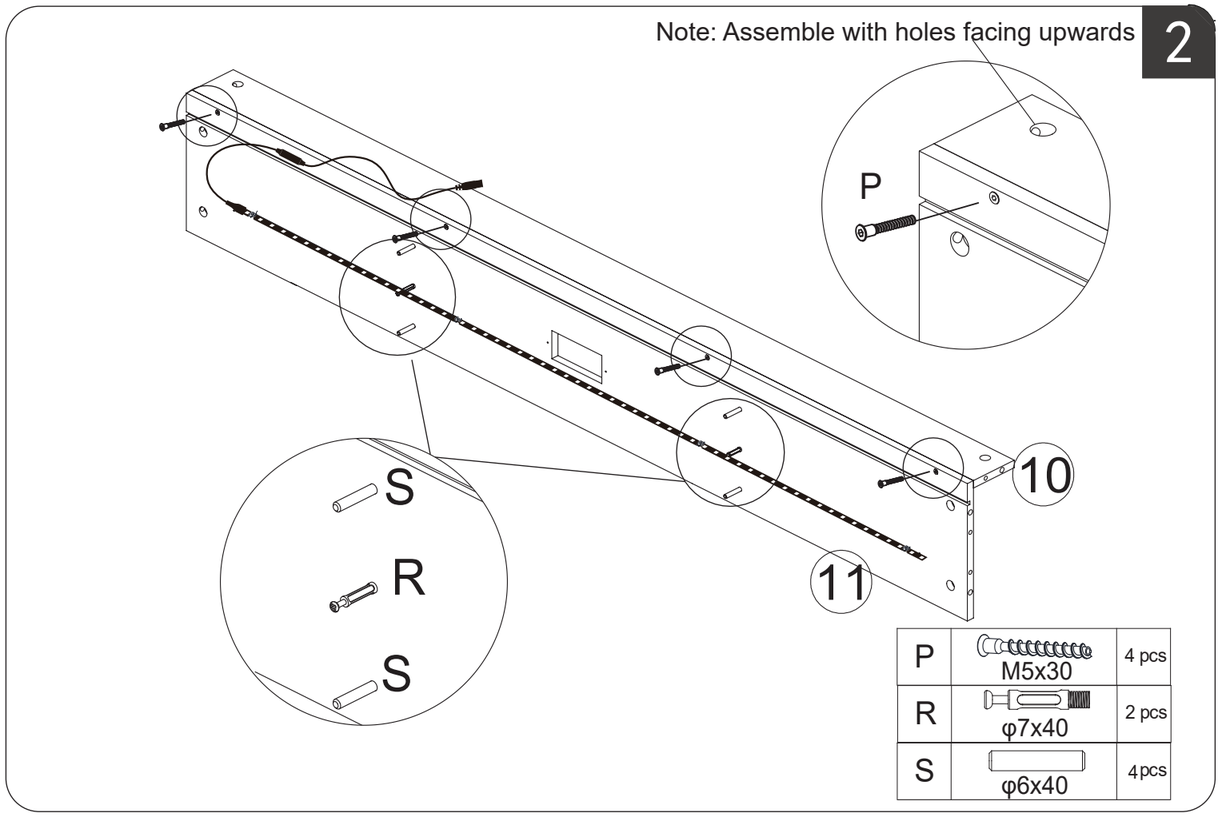

P	M5x30	4 pcs
R	φ7x40	2 pcs
S	φ6x40	4pcs

3

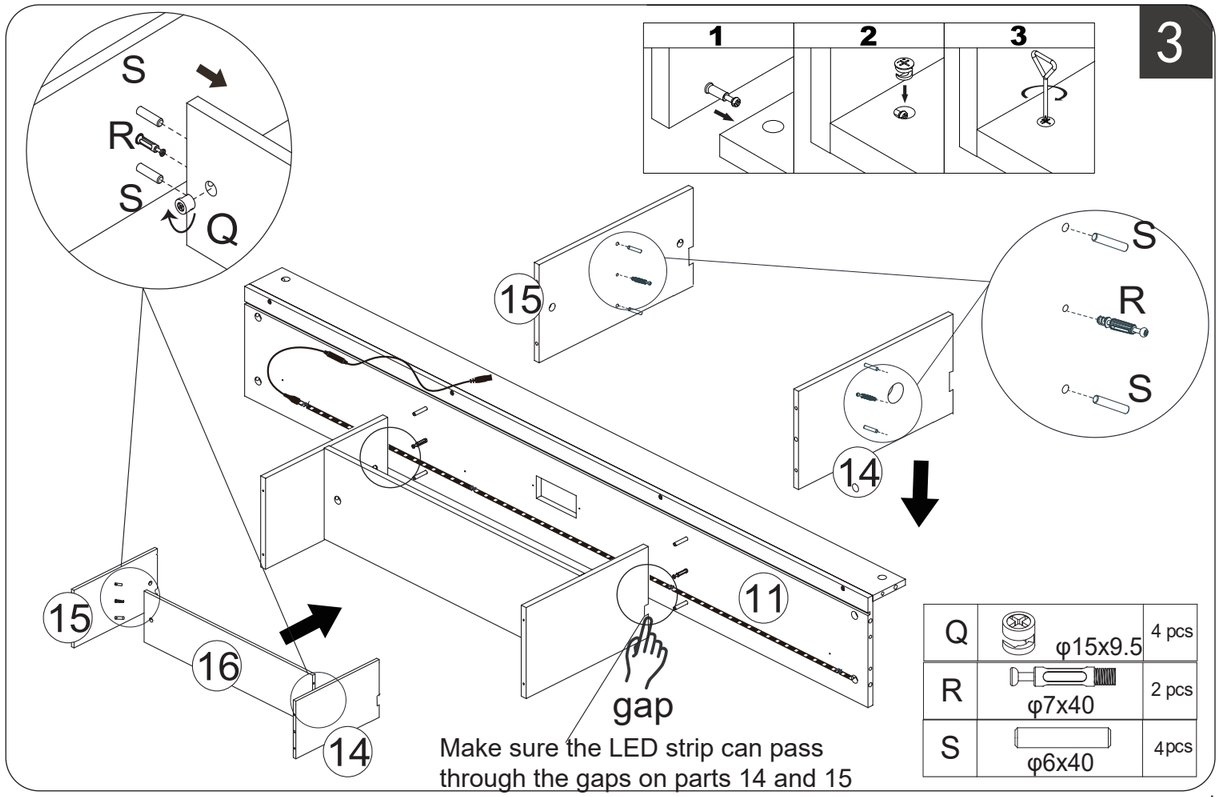

Make sure the LED strip can pass through the gaps on parts 14 and 15

Q	φ15x9.5	4 pcs
R	φ7x40	2 pcs
S	φ6x40	4pcs

5

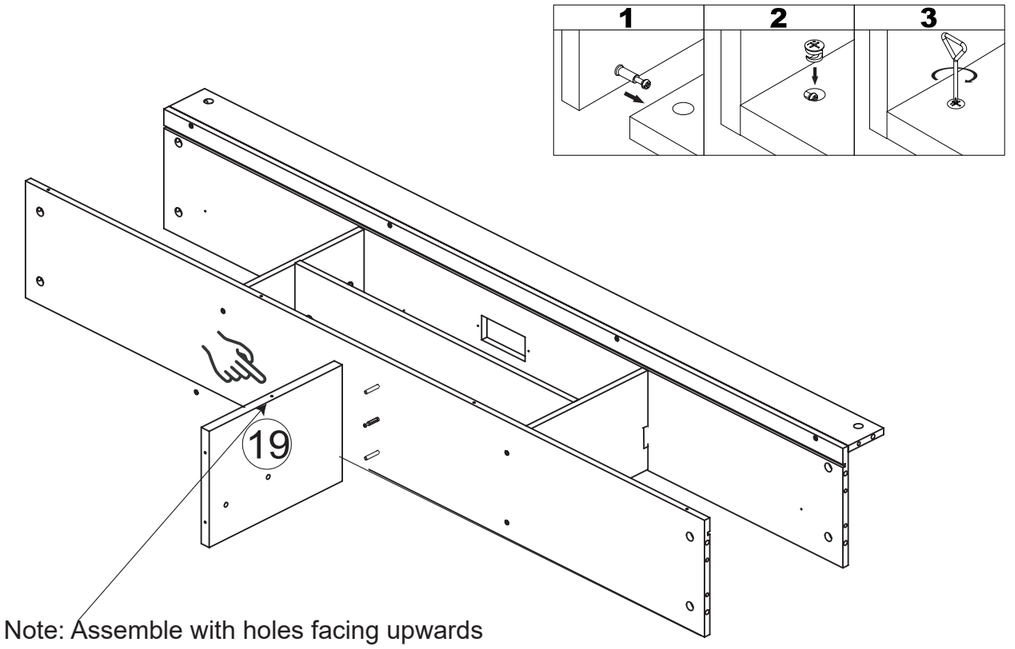

Note: Assemble with holes facing upwards

Q	φ15x9.5	1 pcs

4

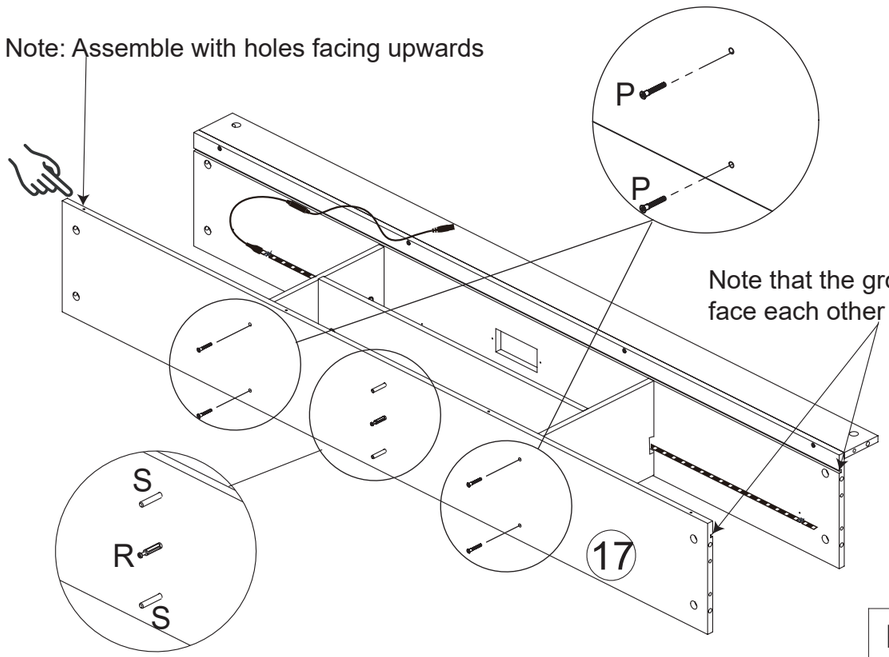

P	M5x30	4 pcs
R	φ7x40	1 pcs
S	φ6x40	2 pcs

6

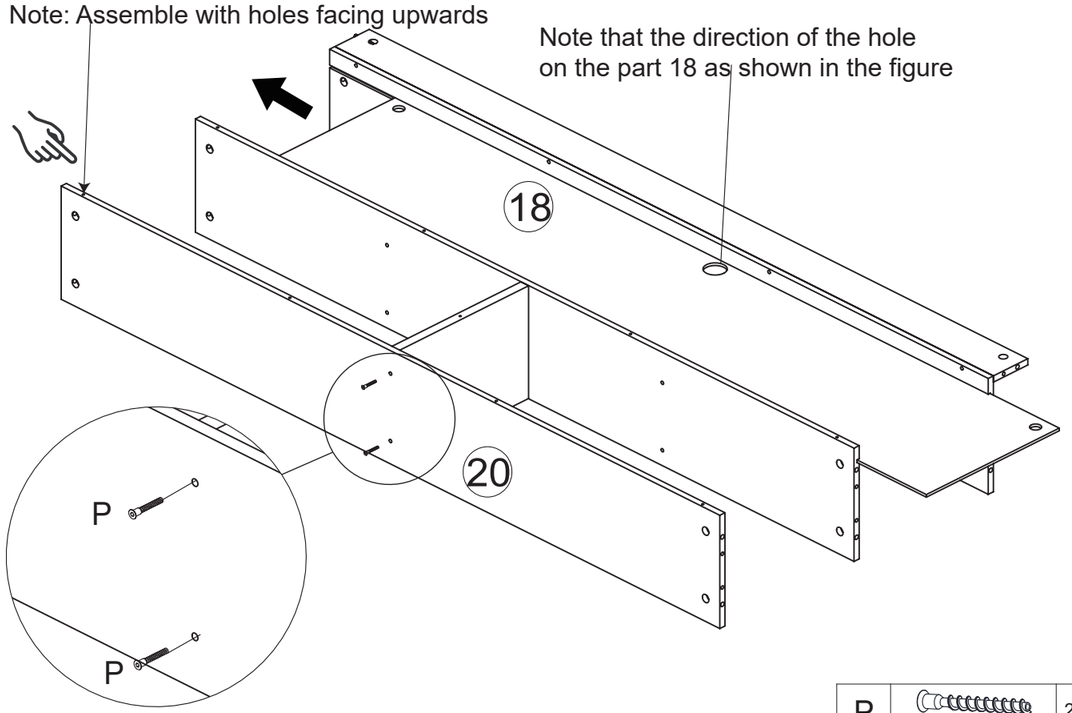

P	M5x30	2 pcs

7

Do not tighten the screws at first.
And making sure that the spring is assembled properly (as shown on the graph).

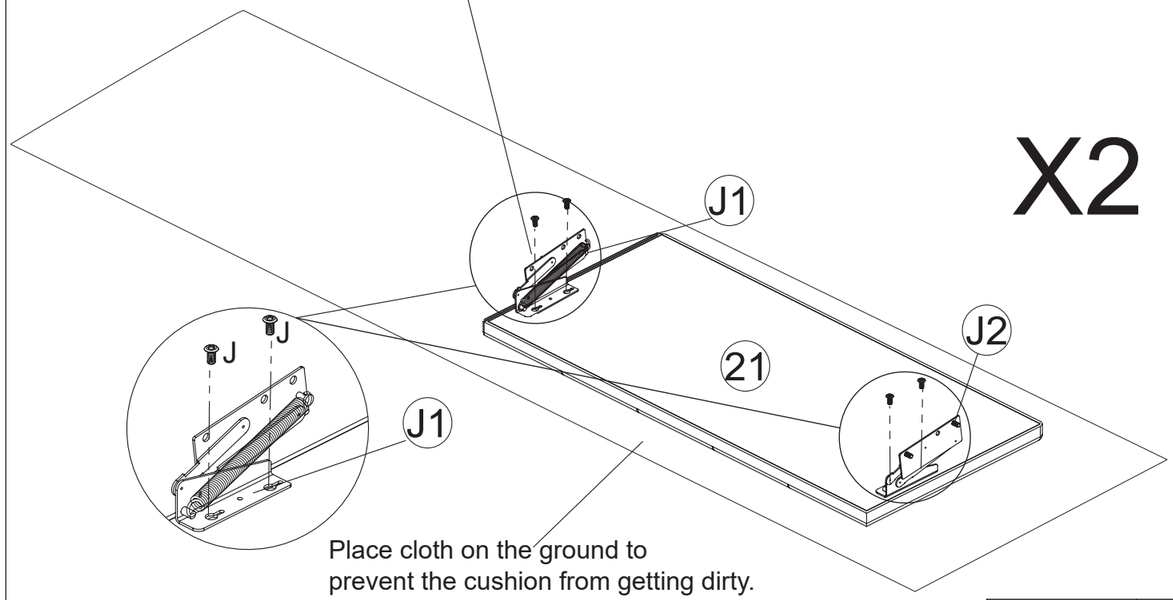

Place cloth on the ground to prevent the cushion from getting dirty.

J	M6x10	8PCS

9

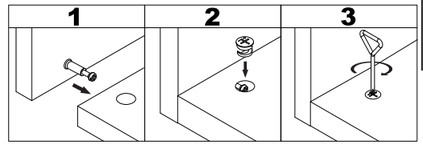

Q	φ15x9.5	10pcs

8

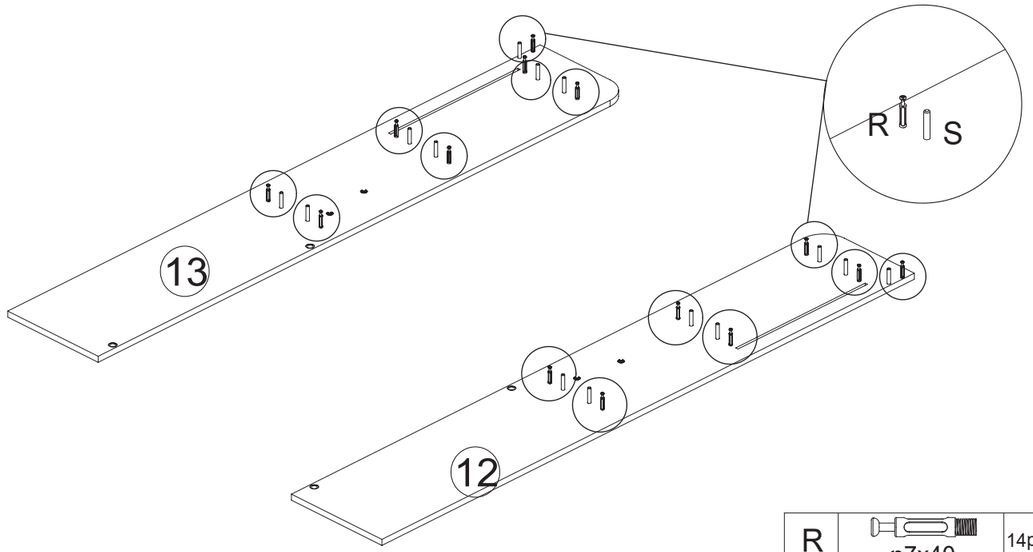

R	φ7x40	14pcs
S	φ6x40	14pcs

10

Make sure the hole positions of J1 and J2 are aligned, it helps you to assemble easily.

Note: Two components 21 are placed below components 13 and 12

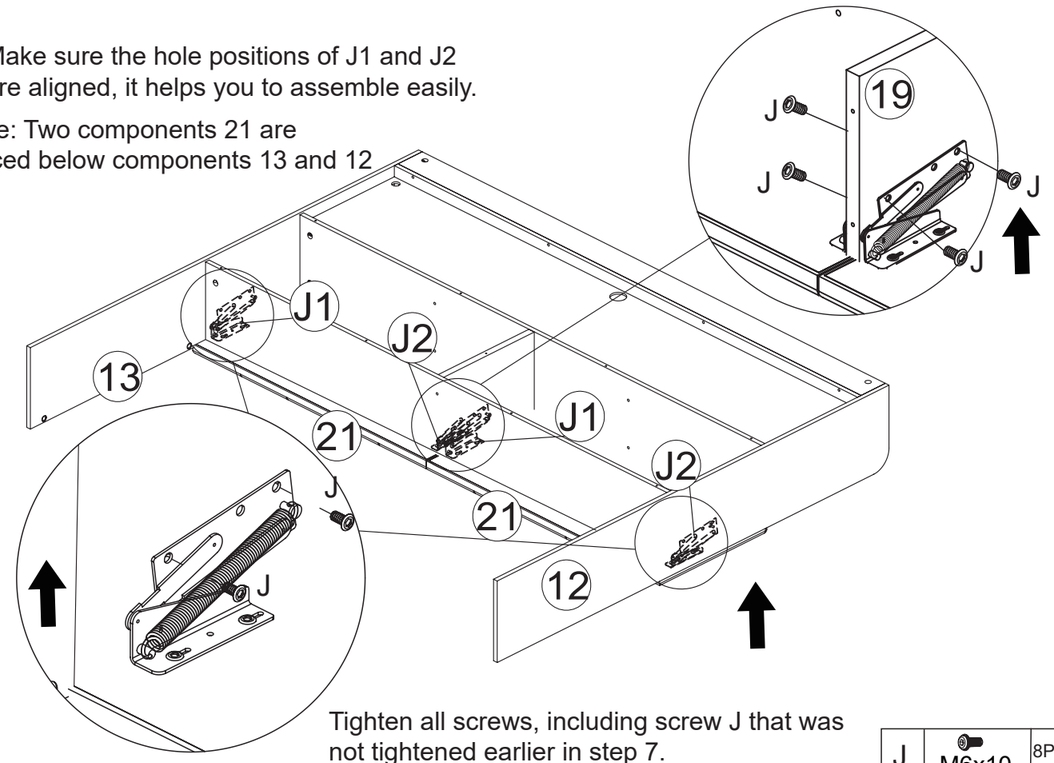

Tighten all screws, including screw J that was not tightened earlier in step 7.

J	M6x10	8PCS

11

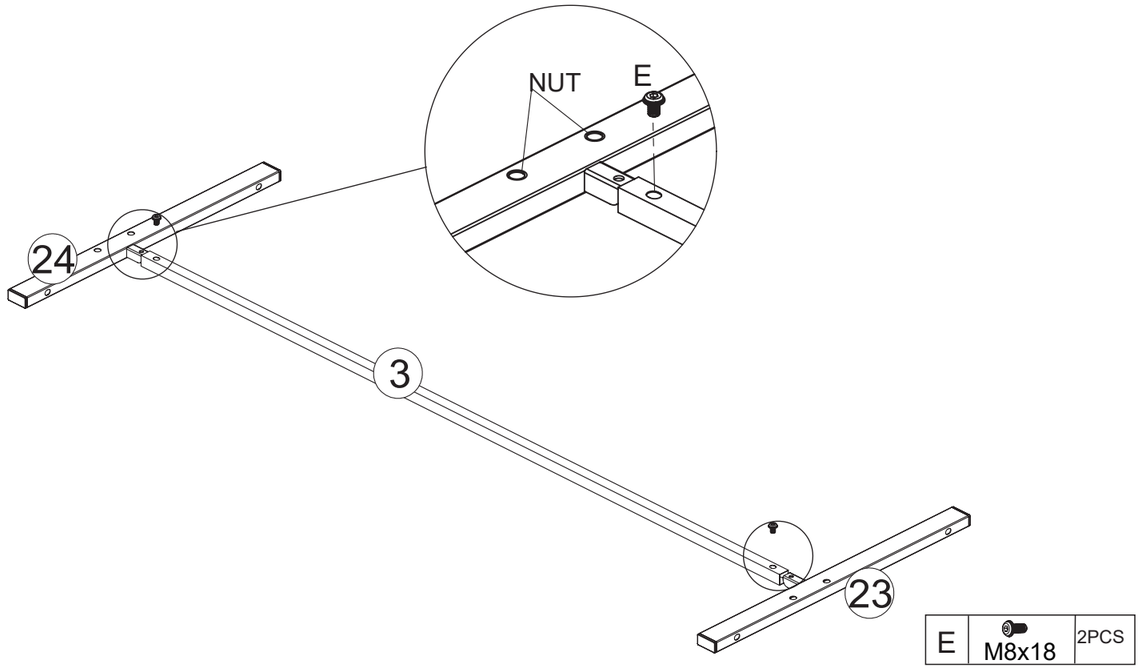

E	M8x18	2PCS

12

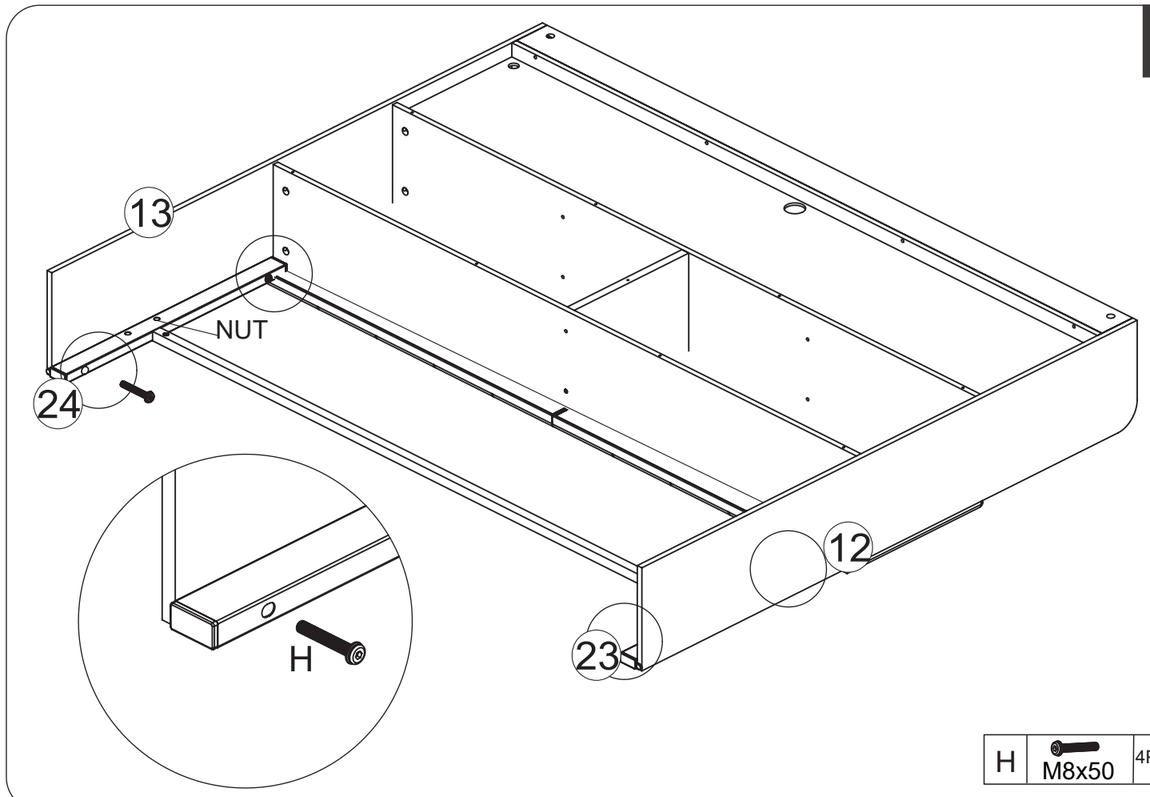

H	M8x50	4PCS

13

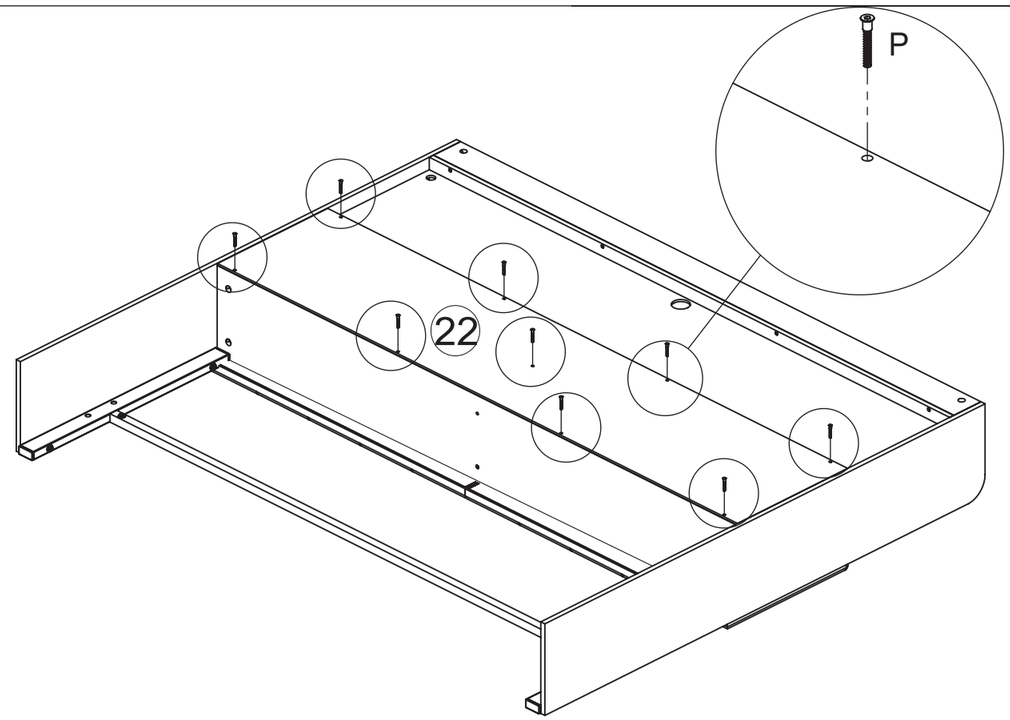

P	M5x30	9 pcs

14

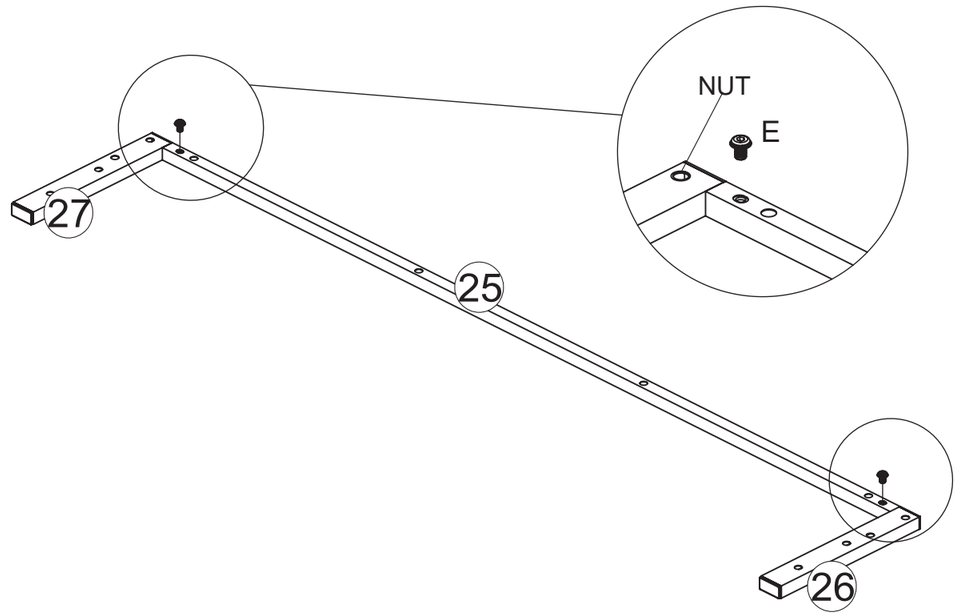

E	M8x18	2PCS

15

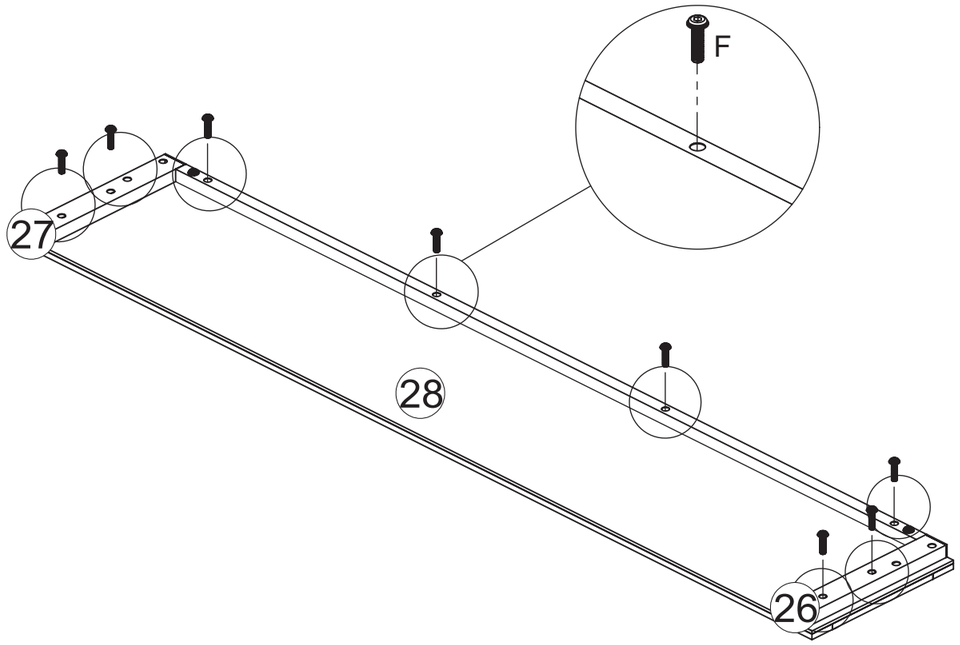

F	M8x30	8PCS

16

WARNING!

Moving parts can crush or cut. Keep fingers,hands,and feet away to avoid injury

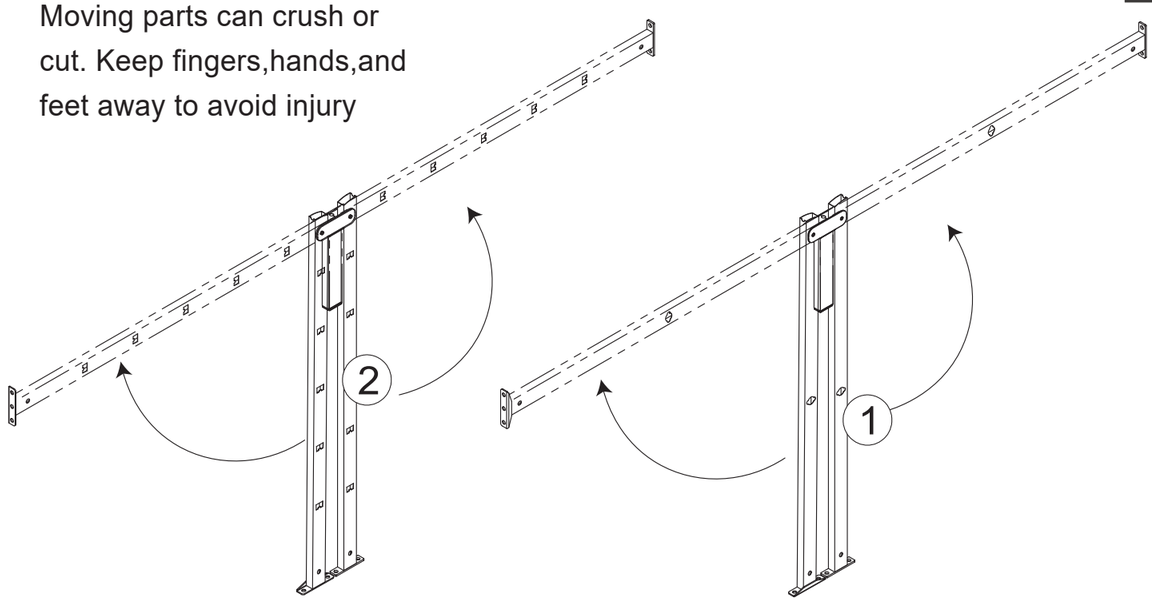

17

WARNING!

Moving parts can crush or cut. Keep fingers,hands,and feet away to avoid injury

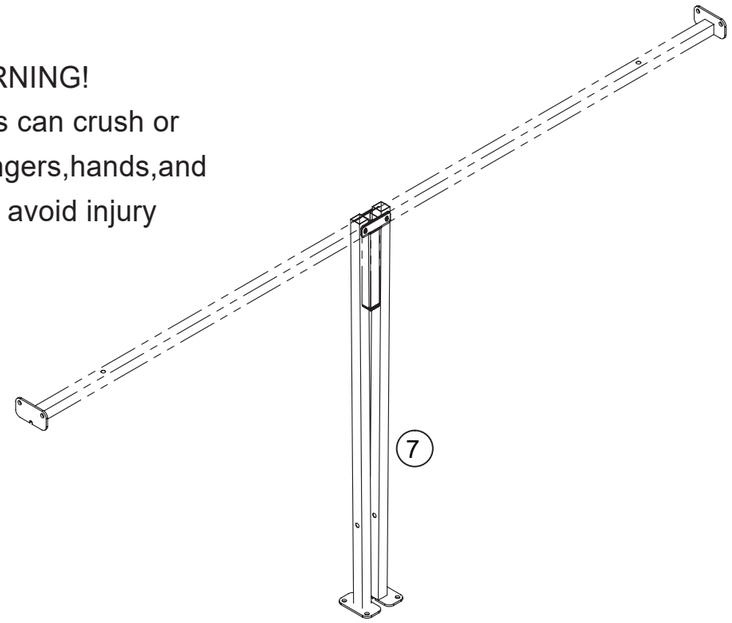

18

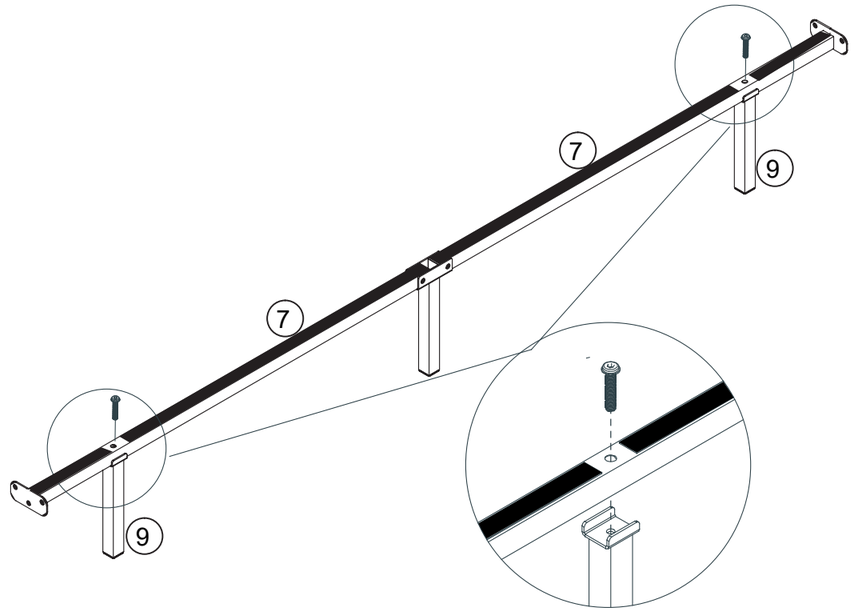

G	M8x40	2PCS

19

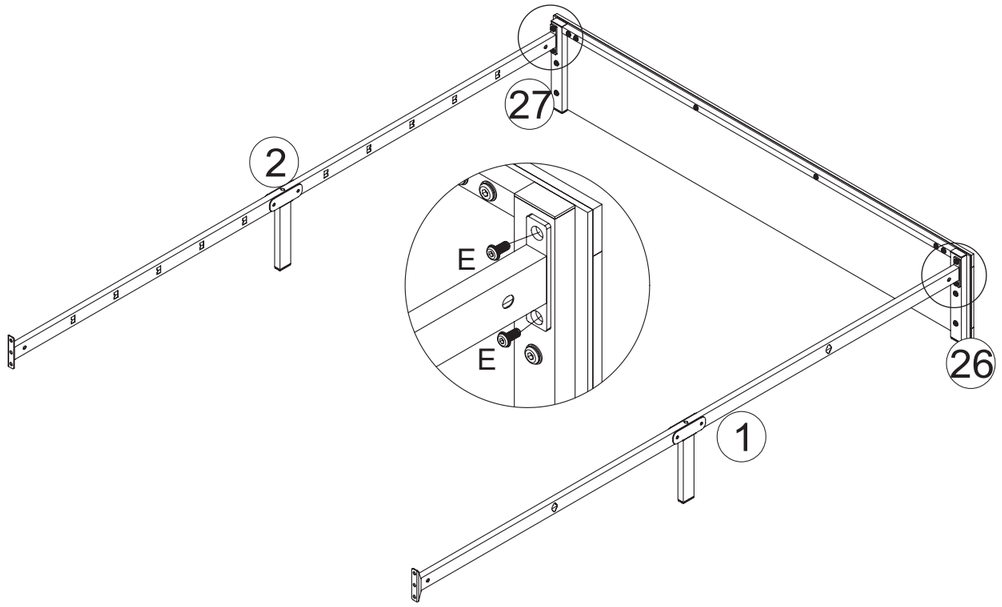

E	M8x18	4PCS

20

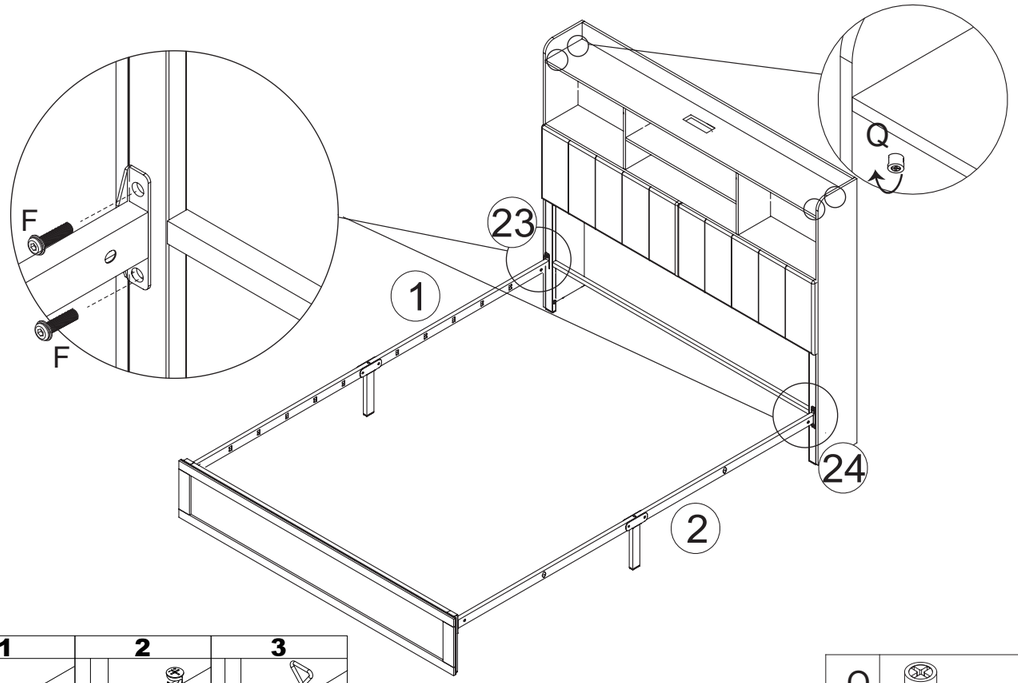

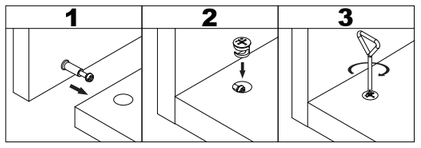

Q	φ15x9.5	4 pcs
F	M8x30	4PCS

21

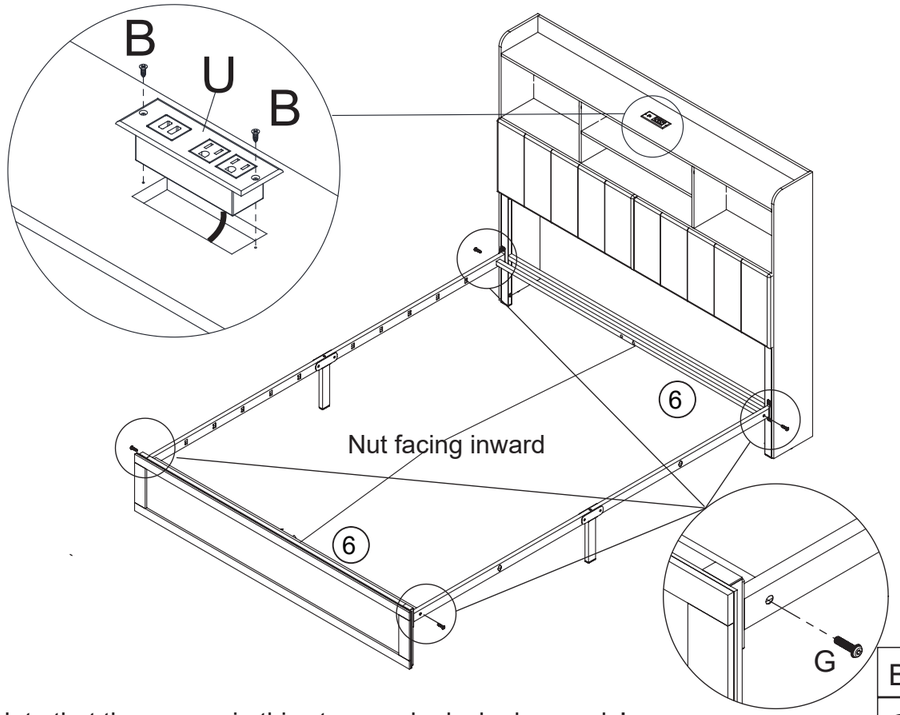

Note that the screws in this step can be locked properly!

B	ST4.2X12	2PCS
G	M8x40	4PCS

22

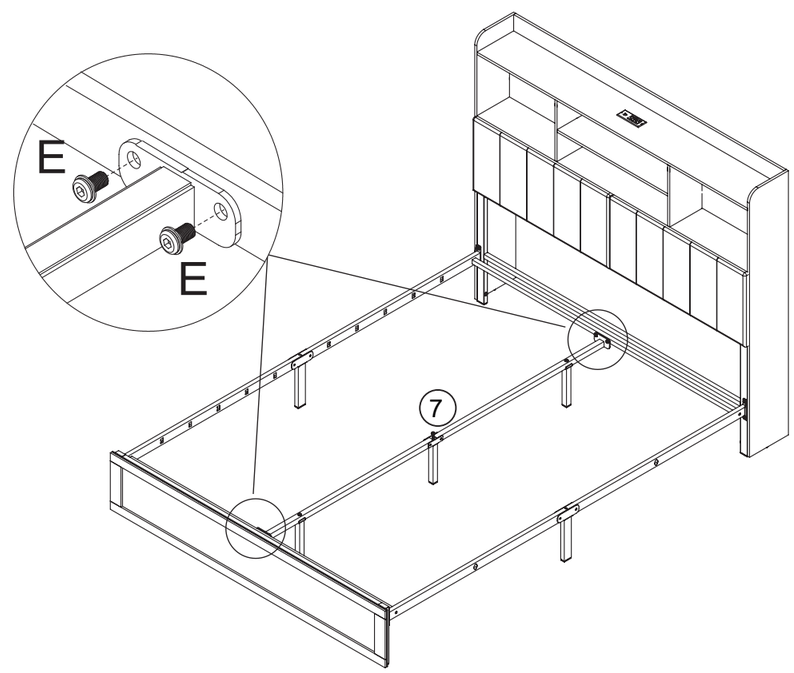

E	M8x18	4PCS

23

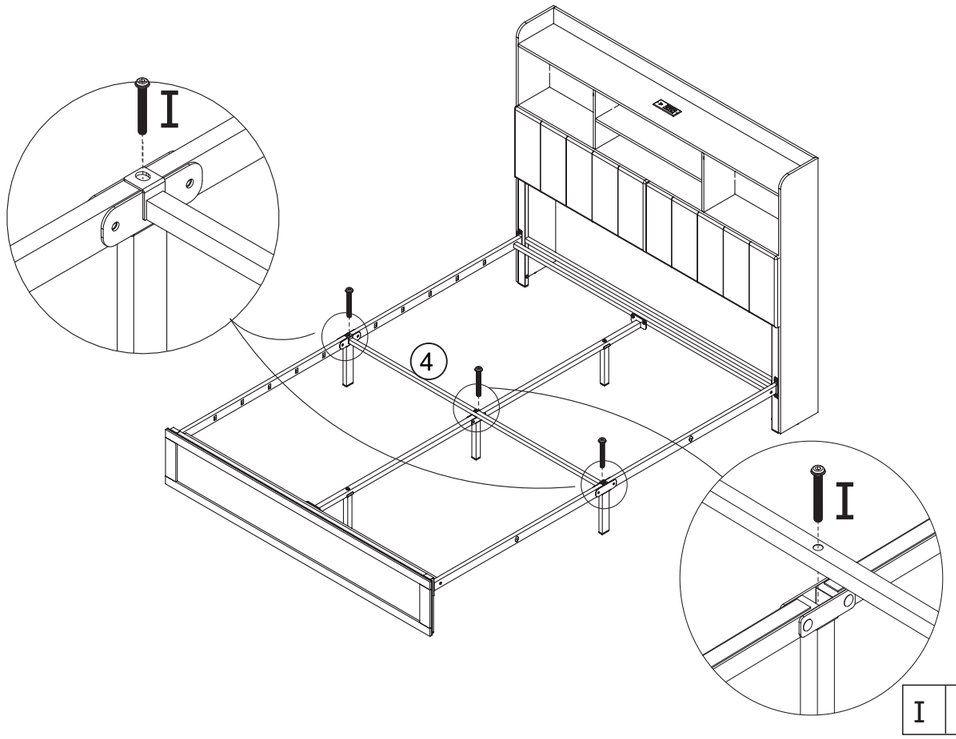

I	M8x60	3PCS

24

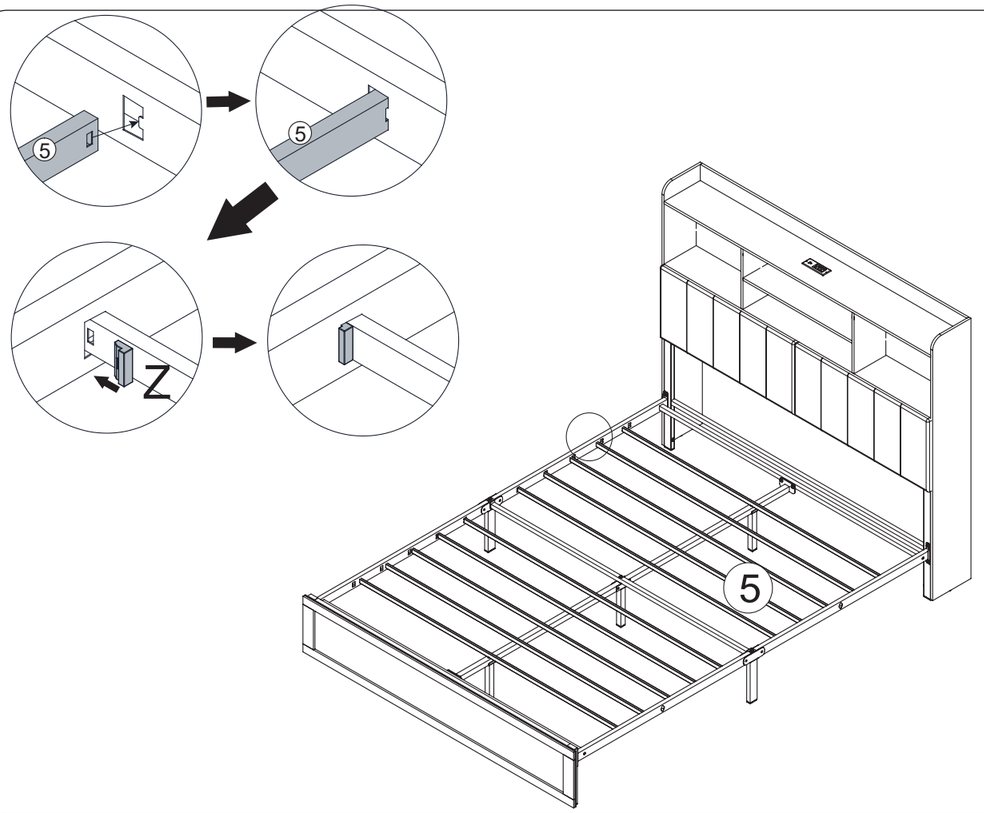

25

X4

Open the metal frame

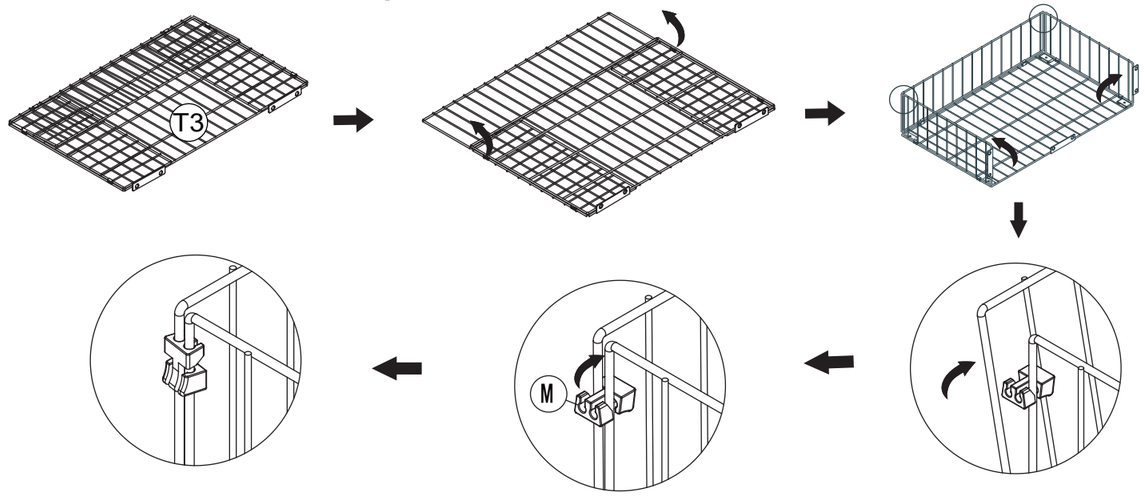

rotates part M at 90 degress and
lock the metal frame as shown on the graph

M		8PCS

26

X4

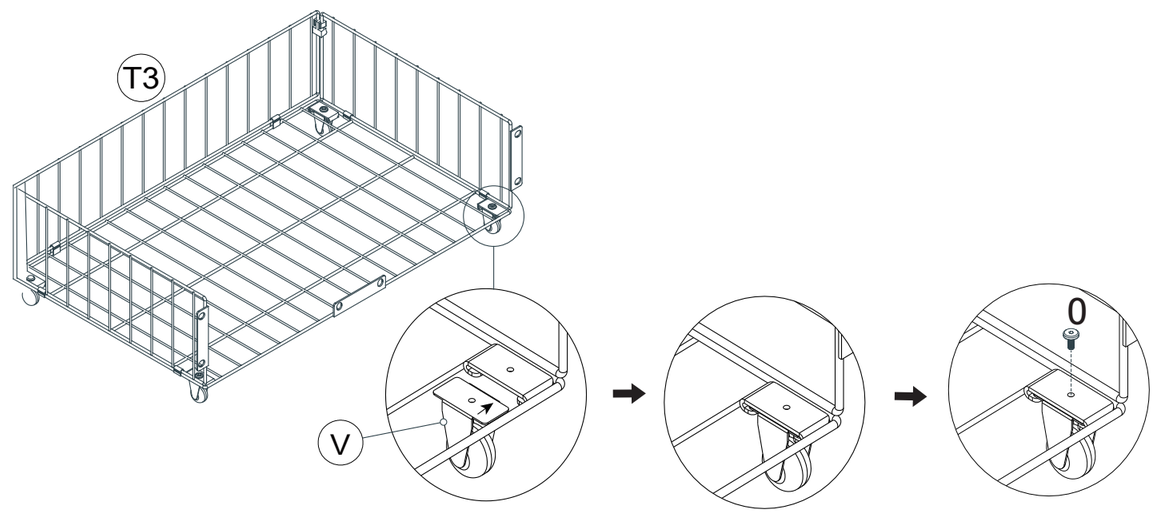

O	M4x10	16PCS

27

X4

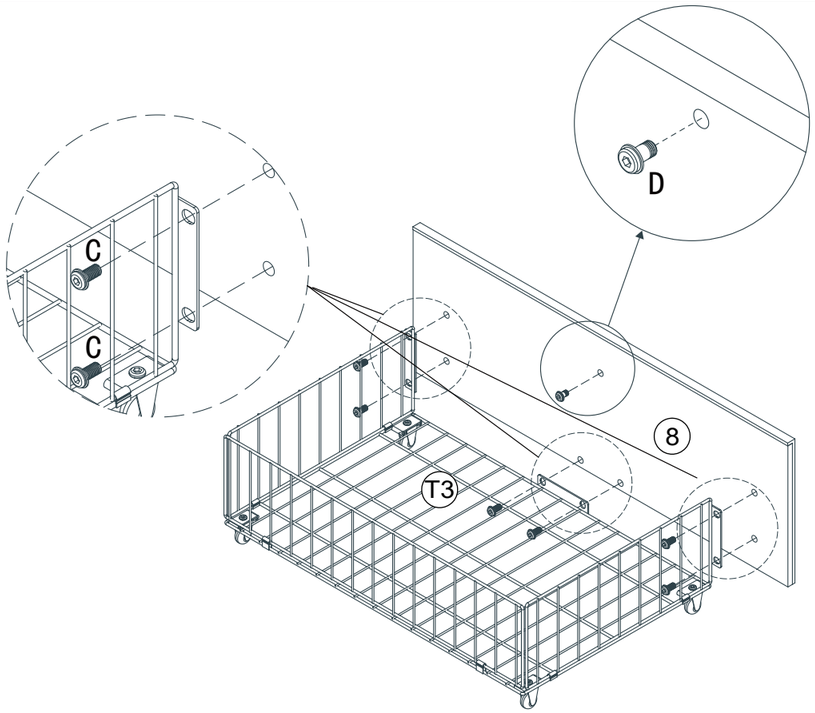

white zinc

C	M8x12	24pcs
D	M8x14	4pcs

Colored Zinc

28

Gently lift the drawer, align the screw with the gourd-shaped hole,and then snap it in

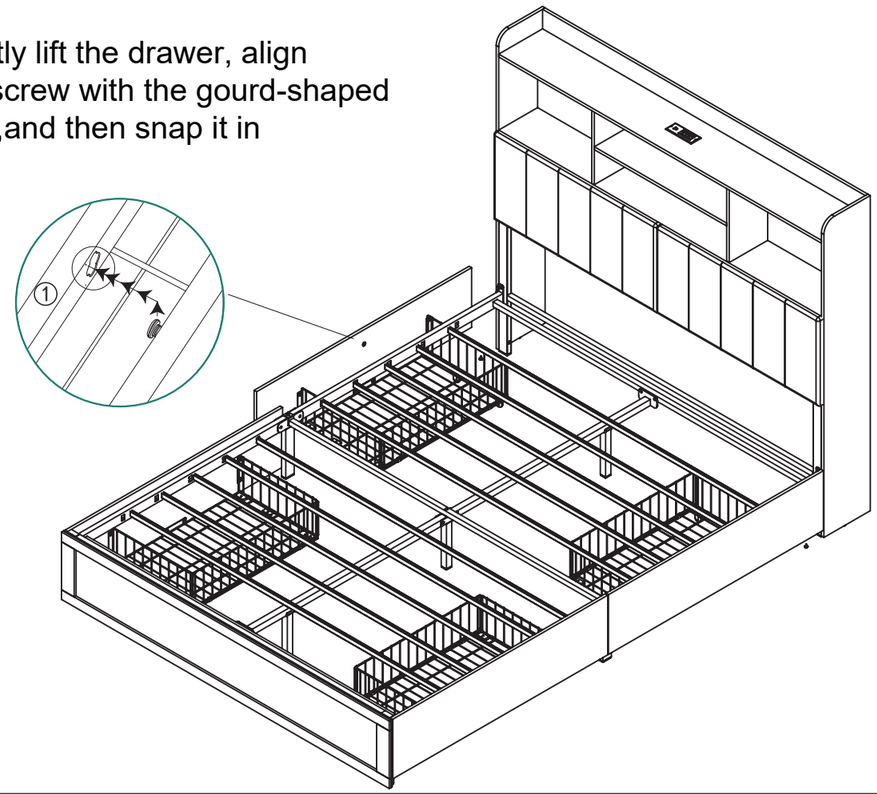

29

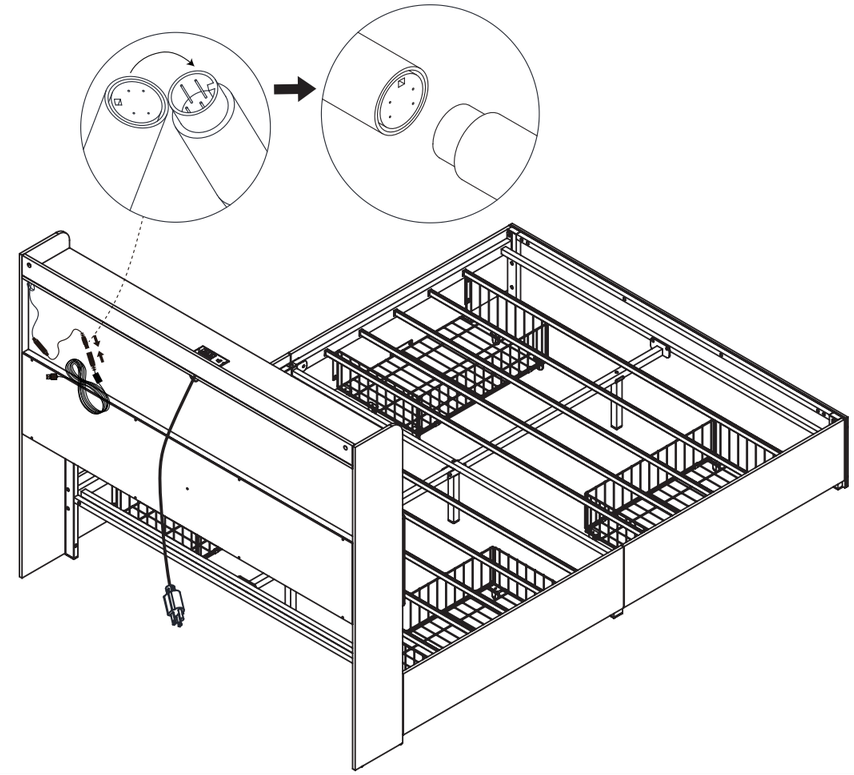

30

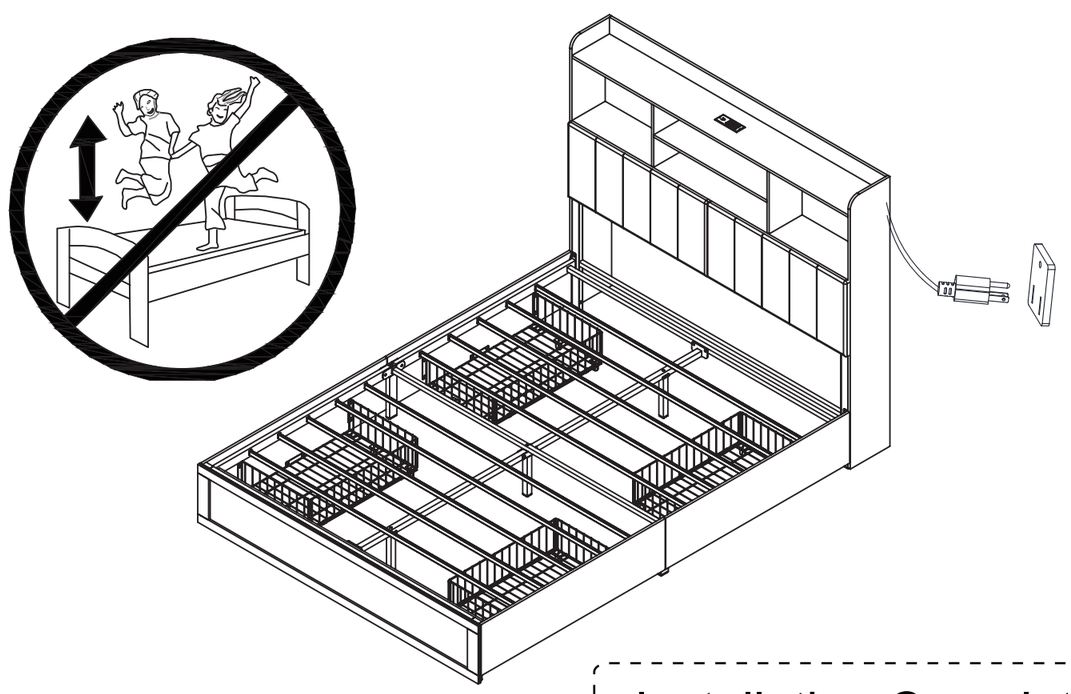

Installation Complete