2PC SINGLE SOFA

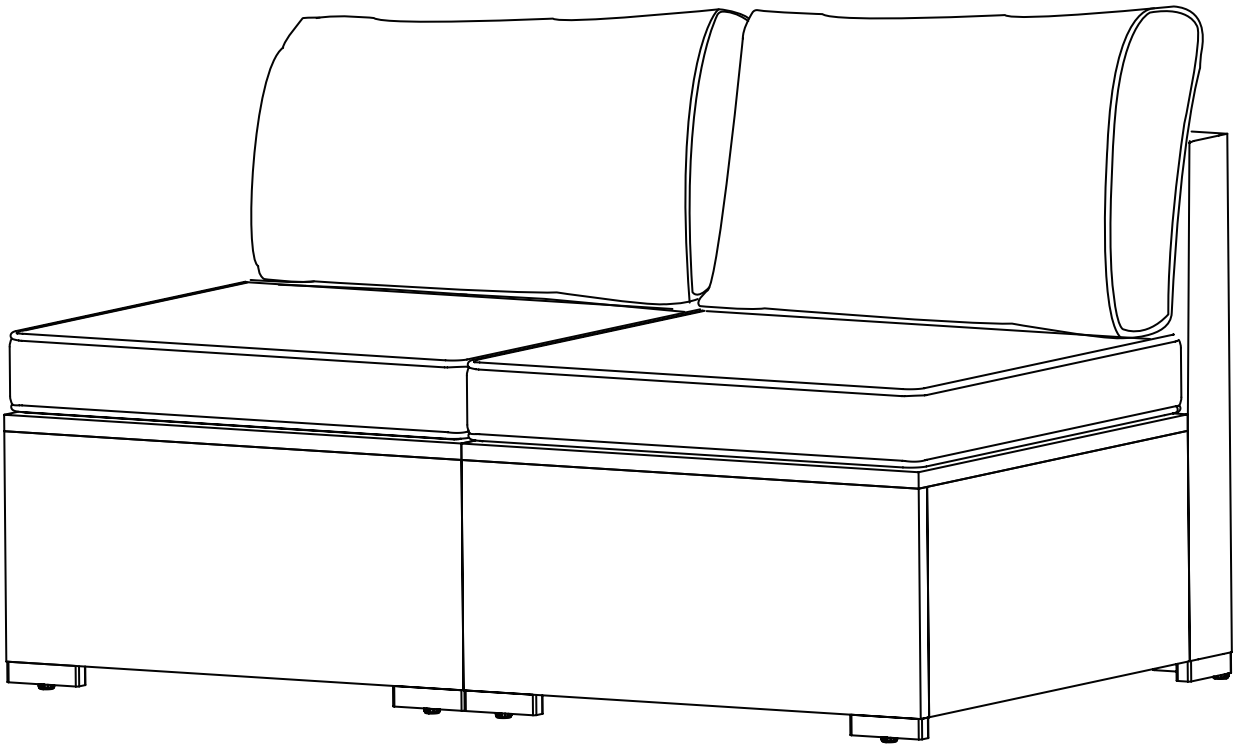

After-sales mailbox：
Patiofurnitureserviceteam@outlook.com

NOTICE ⚠

Please keep these instructions for future reference.
Dear Customer

● Thank you for your purchase. When you receive the product, please make sure that all the parts are intact. Then follow the entire installation instructions to install!

● When installing, please be careful not to tighten the screws immediately! You need to make sure that all the screws are secured to 80%,then tighten them!

● In order to protect the rattan from harm. and the screw hole from grind, do not use the electric drill, please use the manual screwdriver in the hardware package!

If problem occur unsatisfactorily as follows

A . The outer box is damaged

B . The product is damaged / bent / cracked while you open the box

C . The parts / accessories / assembly tools are missing

D . The instructions are not clear and can not be referred

E . The product has functional problems

F . Other aspects that you are not satisfied with

Please feel free to contact us for help. and provide the following information:Platform/Shop name/Order ID/buyer's name/ receiver's address/Problem description.

(**Patiofurnitureserviceteam@outlook.com**) will reply within 24 hours and will do our best to resolve the problem for you.

CARE INSTRUCTIONS

● **IMPORTANT!** Always cover the conversation sets with the waterproof cover (**included**) when not in use, or you will get dirty surface.

● To clean the cushion cover, please take out the sponge inside. Follow the care instructions that are sewn into the fabric. Never use solvent-based detergents since these may bleach the material and damage the fabric.

● To clean the metal frame and weaving rattan ,wipe them with clean water.It is not recommended to clean products with a strong cleaner or an abrasive materials, it may discolor or damage the surface.

PART LIST

Before installation, please check that the parts are all included !

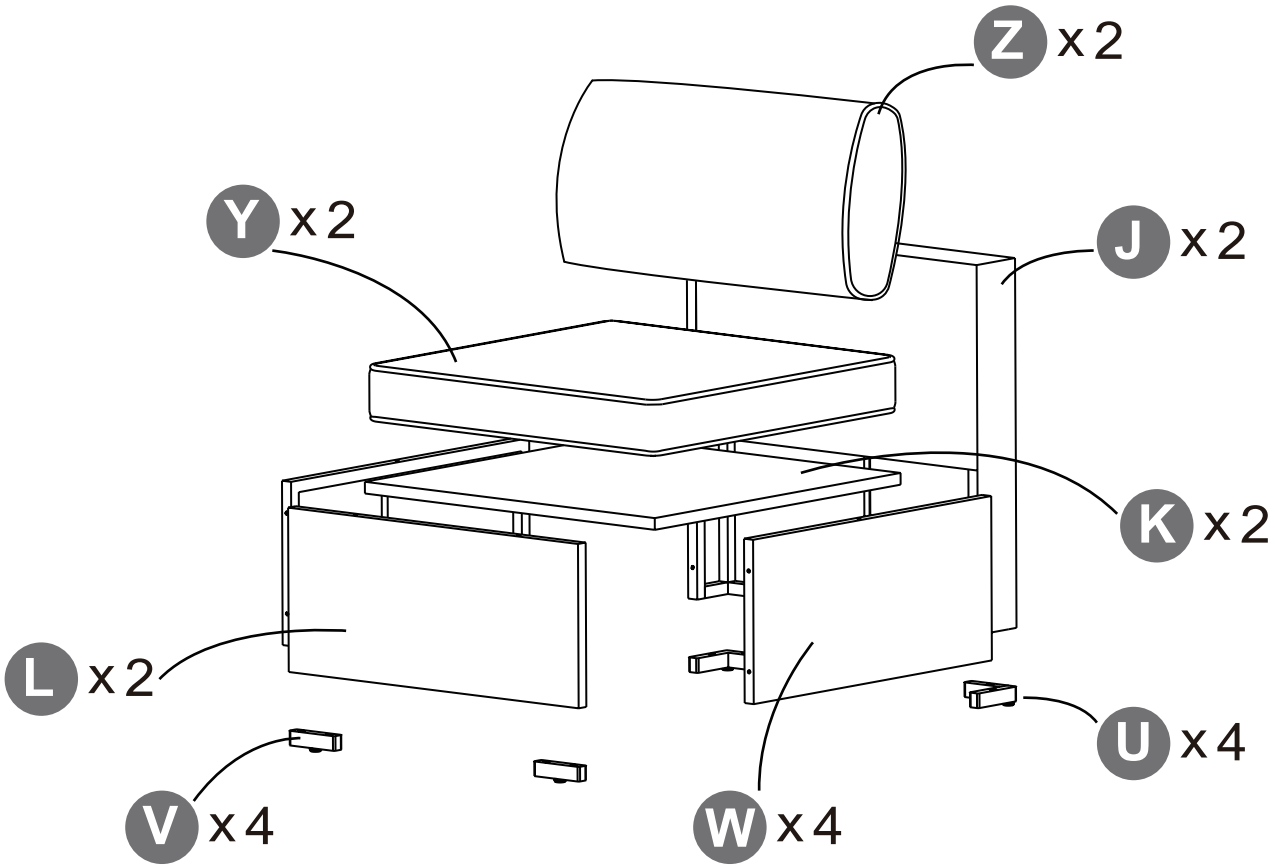

1 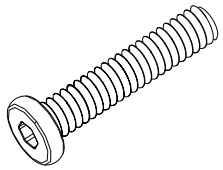 M6*35MM x 28	2 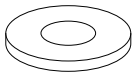 Gasket x 28	3 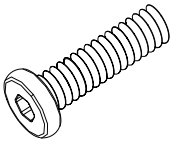 M6*25MM x 16
4 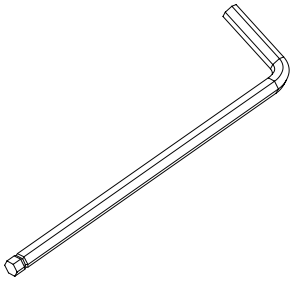 x 1	5 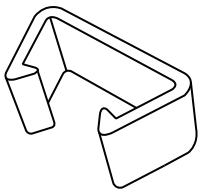 x 6	

1

⚠Notice!

When installing, please DO NOT to tighten the screws immediately! You need to make sure that all the screws are secured to 80%,then tighten them!(In order to aim all the screw holes)

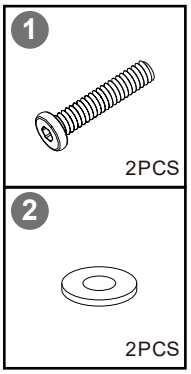

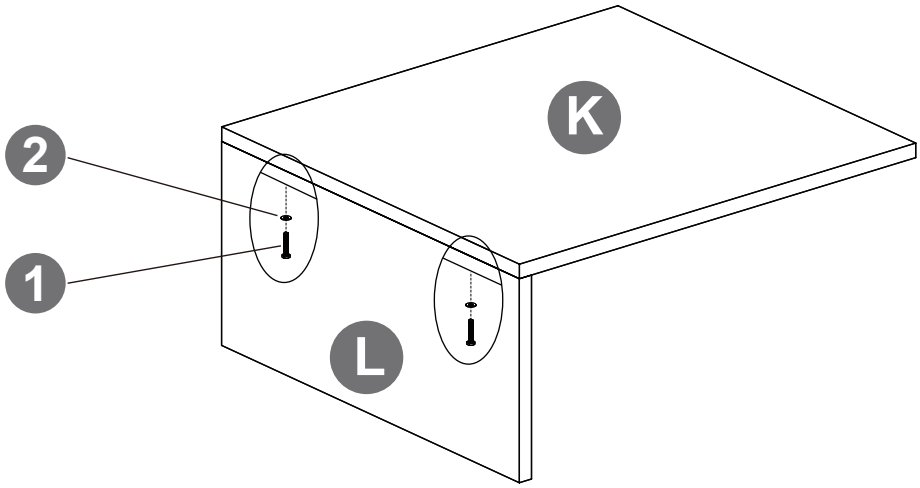

2

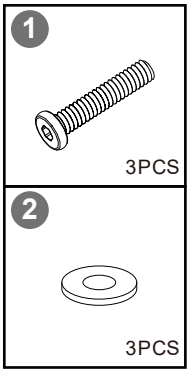

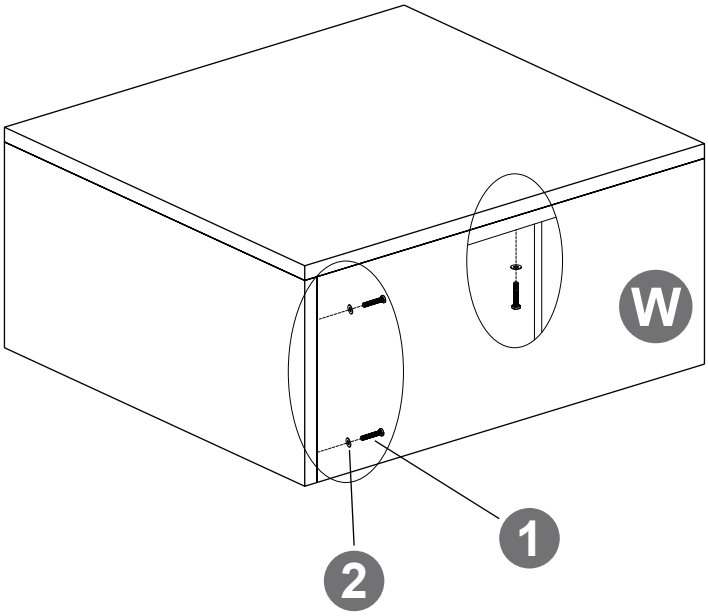

3

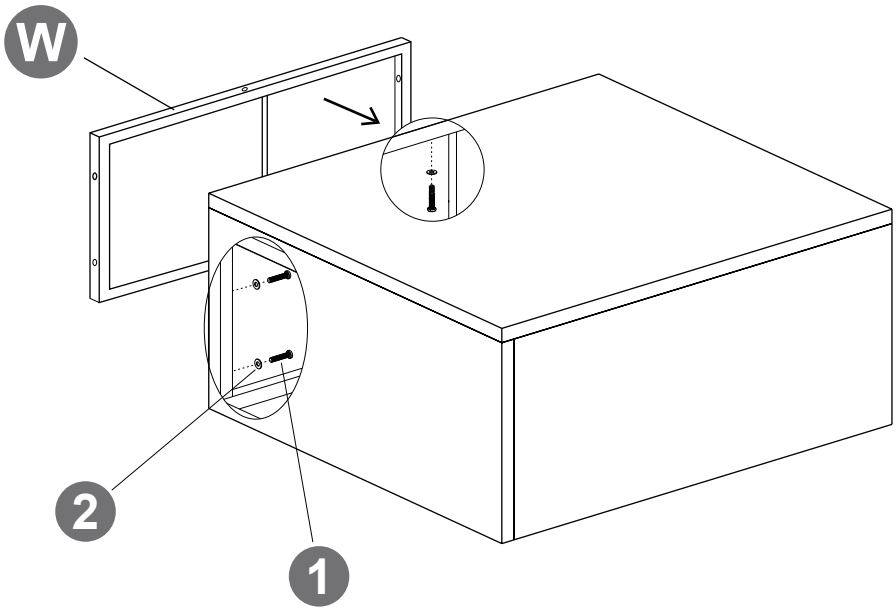

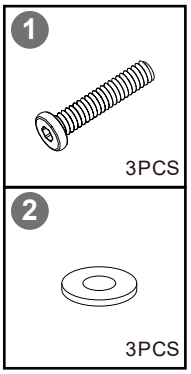

4

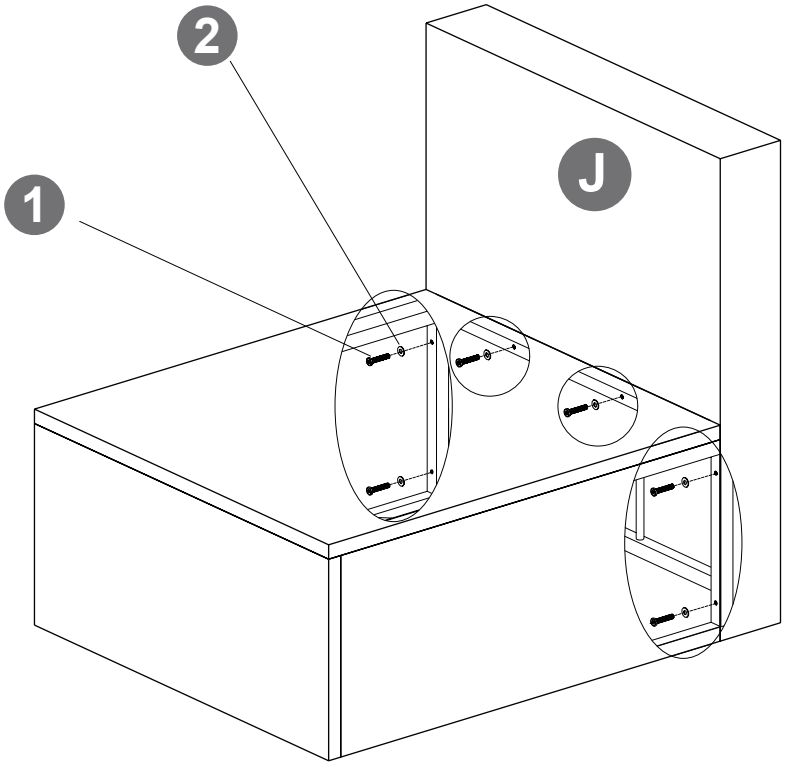

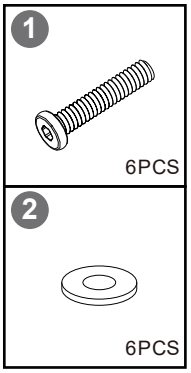

5

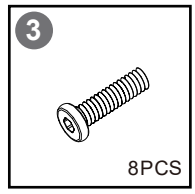

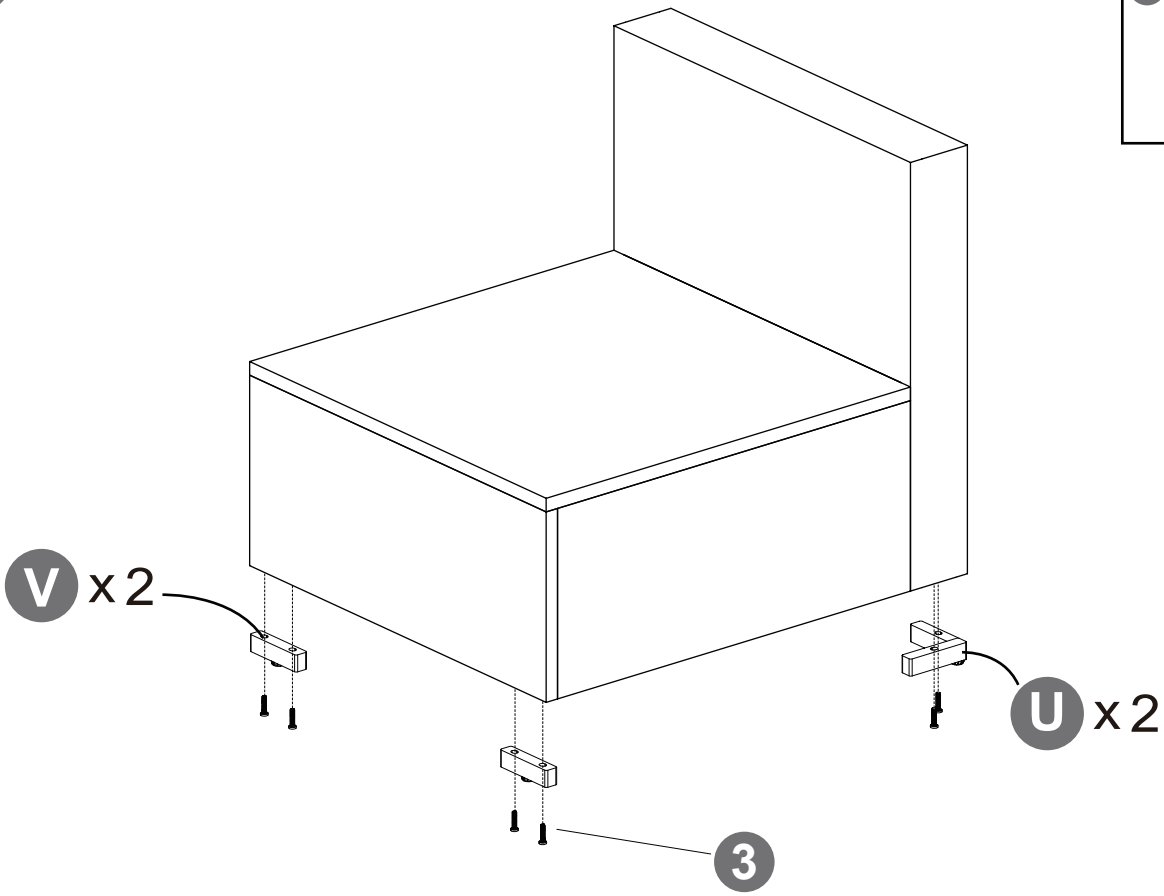

6

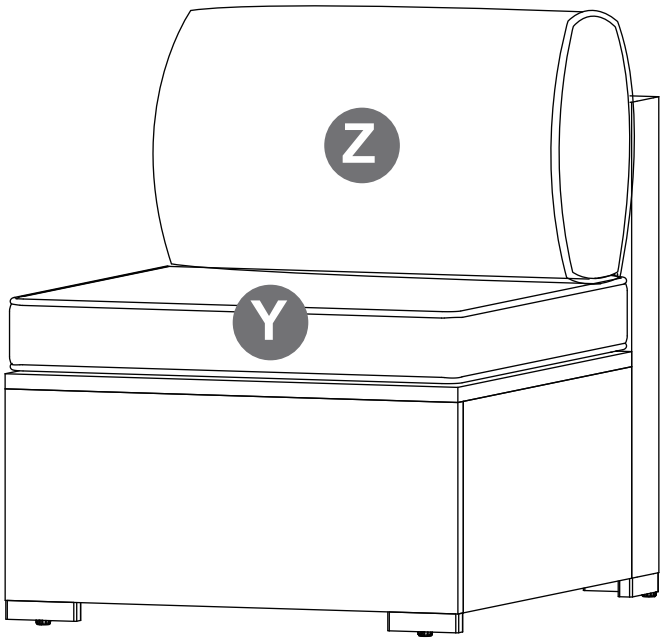

The installation is complete.
Make sure ALL the screws are fully tighten.
The second single sofa can be installed as the same steps.

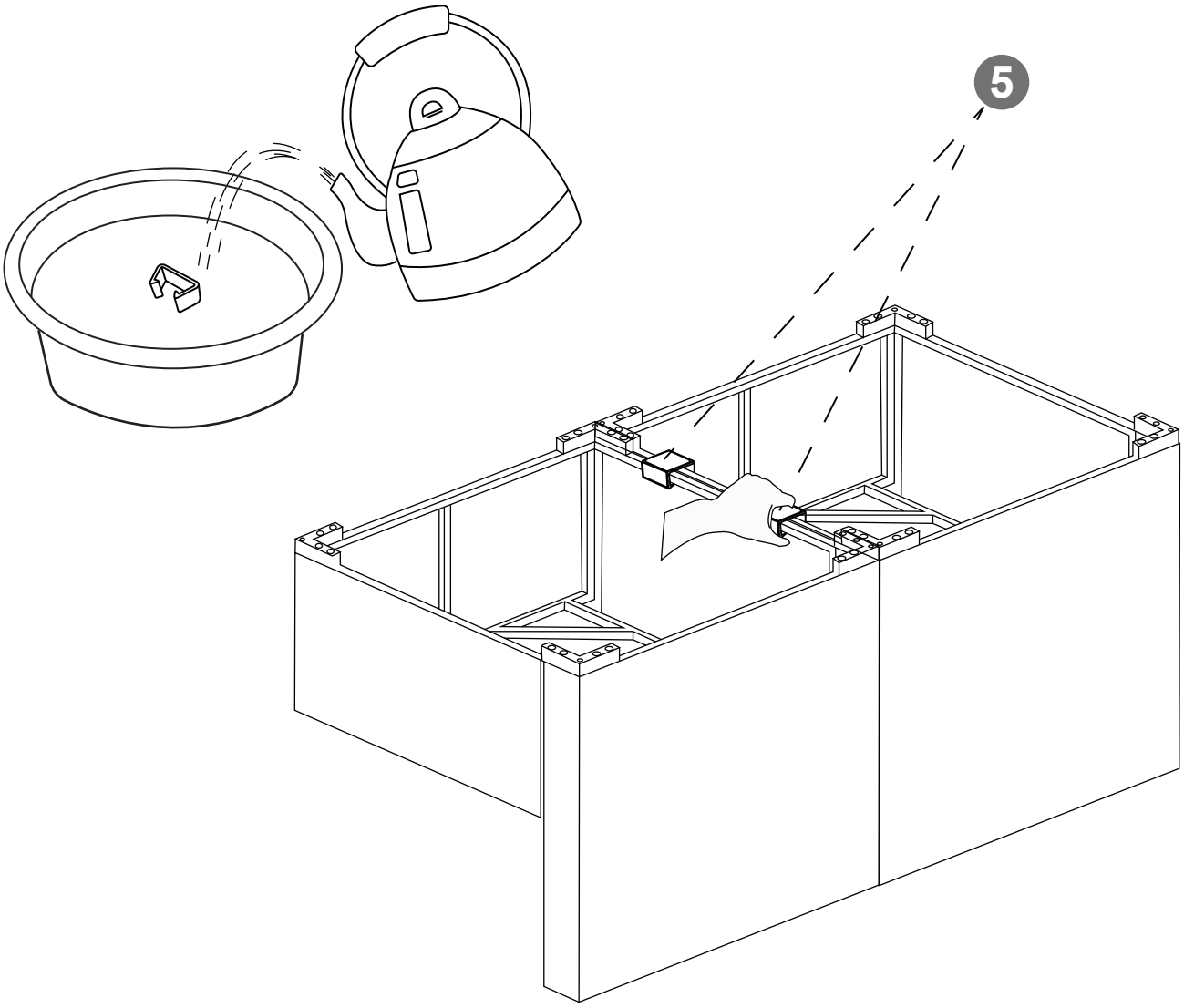

TIPS

1.In order to increase the toughness of the sofa fixed buckle, please soak it in hot water for 10 minutes before use.

2.When in use, first to snap one side of the buckle into the metal frame, and then force the other side into all the frame.

3.You can freely to make a variety of combinations using the above methods.

AFTER-SALE SERVICE

If you have any suggestions for our products or find that the products have quality problems, please contact us first, our after-sales team will reply you within 24 hours, and we will do our best to give you solutions until you are satisfied.

Guaranteed Customer Service

Your shopping experience is very important to us!
Feel unsatisfied? **Contact us!**
Have any questions? **Contact us!**

Wanna Share how wonderful our smart promakes your home?
Share your pictures with us.
Any suggestions? **Contact us!**
We gotcha back!

Patiofurnitureserviceteam@outlook.com