Installation Manual

Accessory list

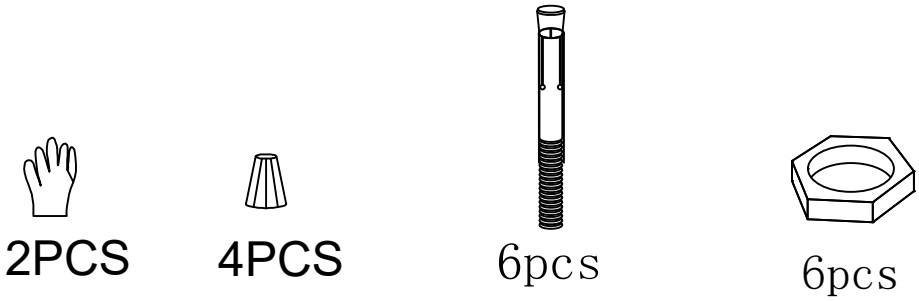

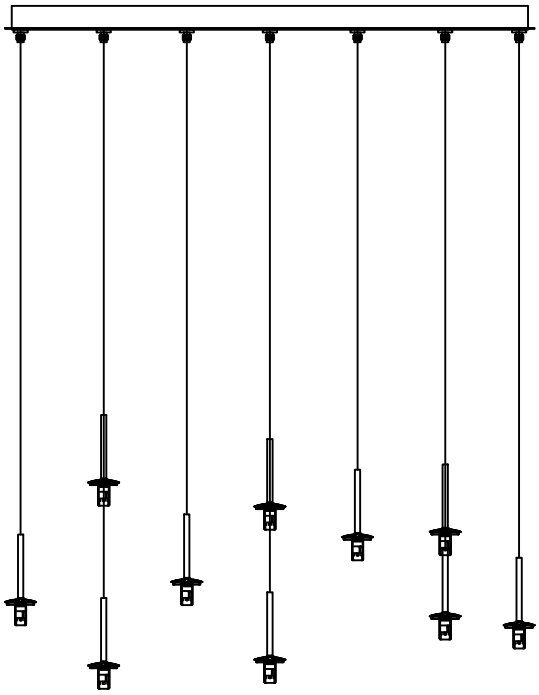

a. Lamp body

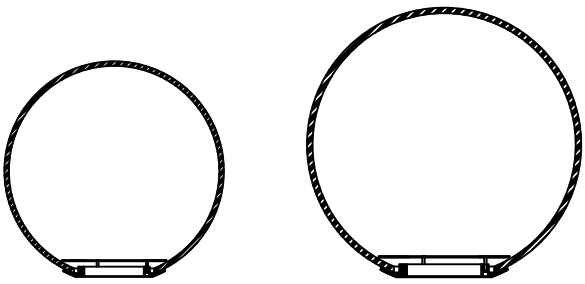

b1*6 b2*4

b. Glass Lampshade

Packaging diagram:

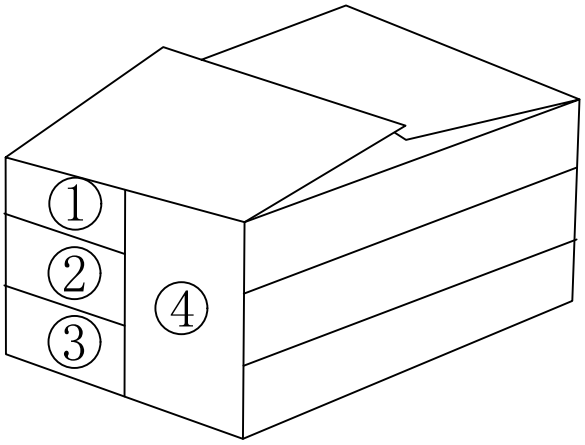

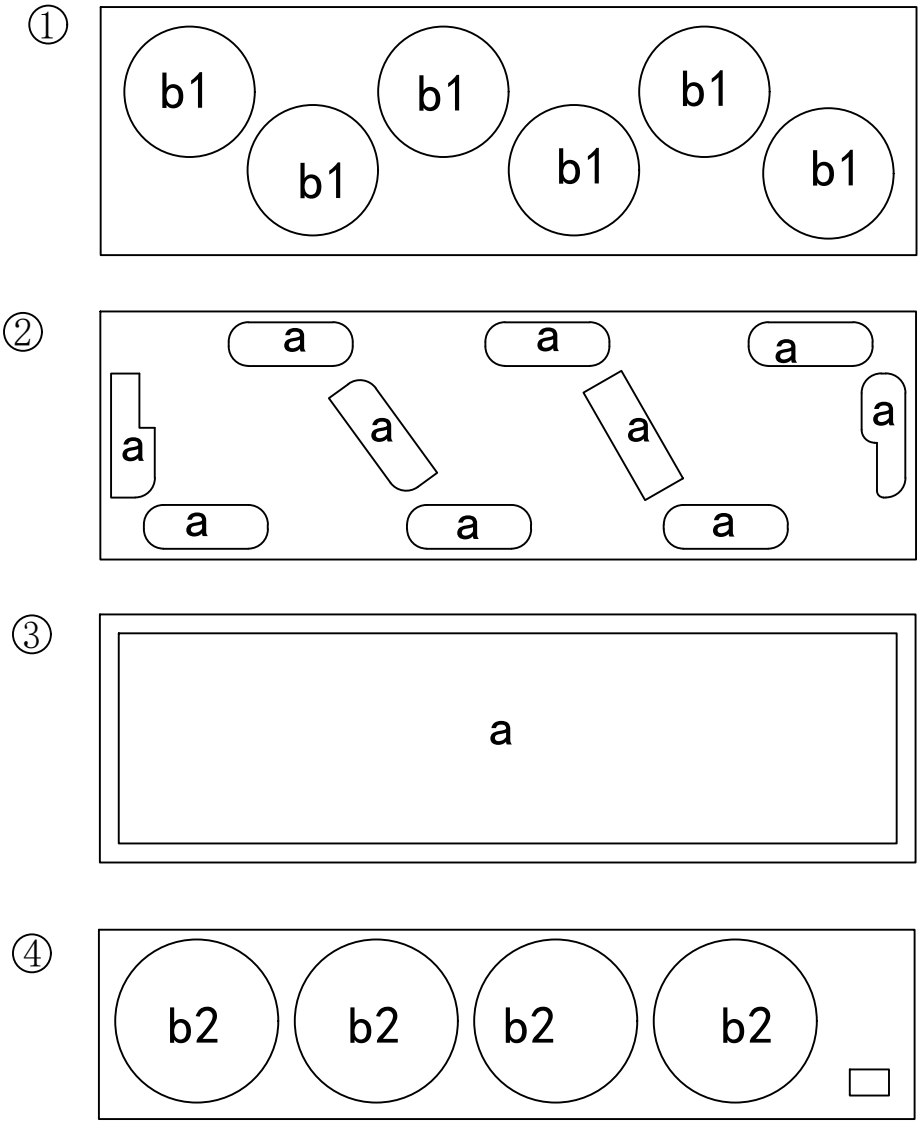

internal packing list:

layer 1:b1*6
layer 2:a
layer 3:a
layer 4:b2*4

Chandelier Installation and Safety Standards

The installation of a chandelier is a crucial step in ensuring its safety. Chandelier safety standards dictate the process of installation, including the tools and equipment that can be used, the methods of securing the chandelier, and the location of the chandelier.

Securing the chandelier is a crucial step in the installation process. Chandelier safety standards dictate that the chandelier must be securely attached to a suitable support, such as a ceiling joist, to prevent it from falling. This includes ensuring that the support is strong enough to bear the weight of the chandelier, and that the chandelier is properly balanced to prevent it from tipping or swaying.

Furthermore, the chandelier must be secured using suitable hardware, such as screws or bolts, that are strong enough to bear its weight. The hardware must be properly installed and tightened to ensure that the chandelier is securely attached. Regular inspections of the hardware are also necessary to detect and repair any damage or
wear promptly

Before assembly:

★ Please read all the instructions carefully.

★ Keep the instruction manual for future reference

★ Separate and list all parts and hardware

★ Read each step carefully and follow the correct installation order.

★ To avoid losing any parts during assembly, we recommend not moving the lamp before completing the assembly. Always place the product on a flat, firm, and stable surface.

★ Keep all small parts and packaging materials of this product away from babies and children, as they may cause serious injury.

★Product Parameters：

light：G9*10

1. mounting plate installation :

(1), Take out the hanging plate inside the ceiling canopy.

(2), Fix the hanging plate to the ceiling with expansion bolts.

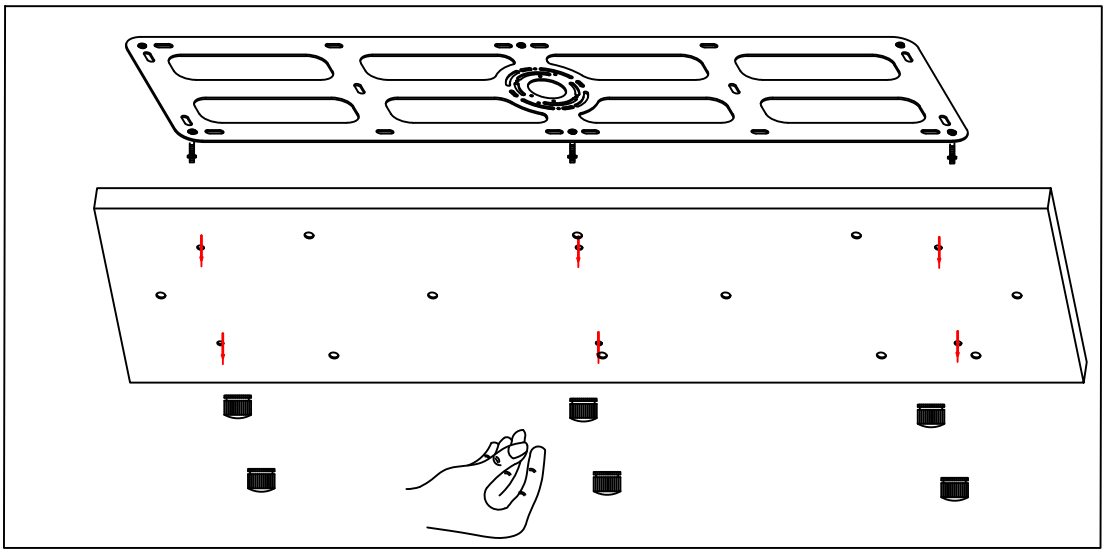

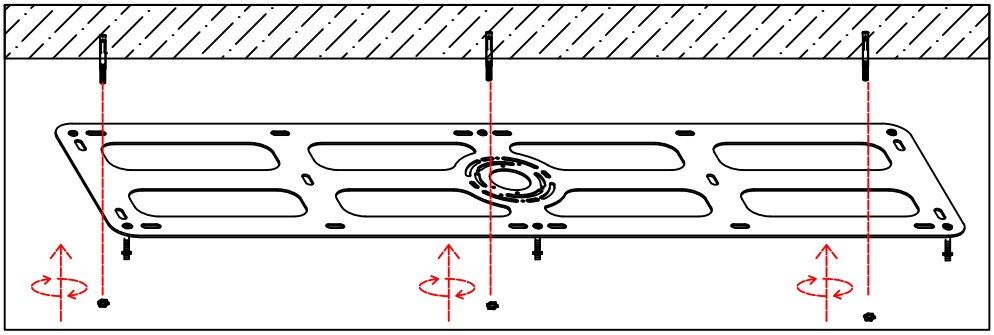

2. Whole Lamp Installation :

(1), Untie the cord binding the electrical wires to allow for subsequent height adjustment of the lamp body

(2) secure the ceiling canopy onto the hanging plate.

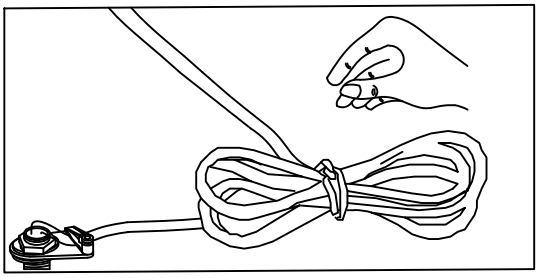

Step 1

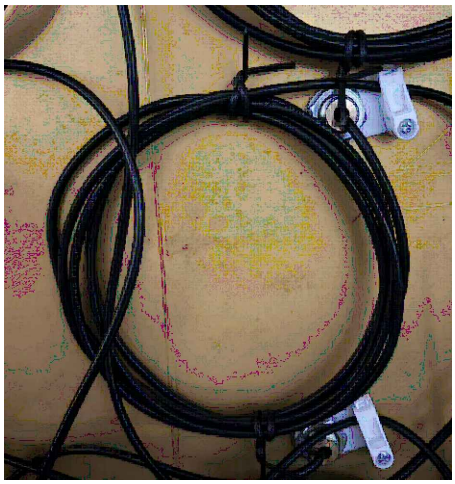

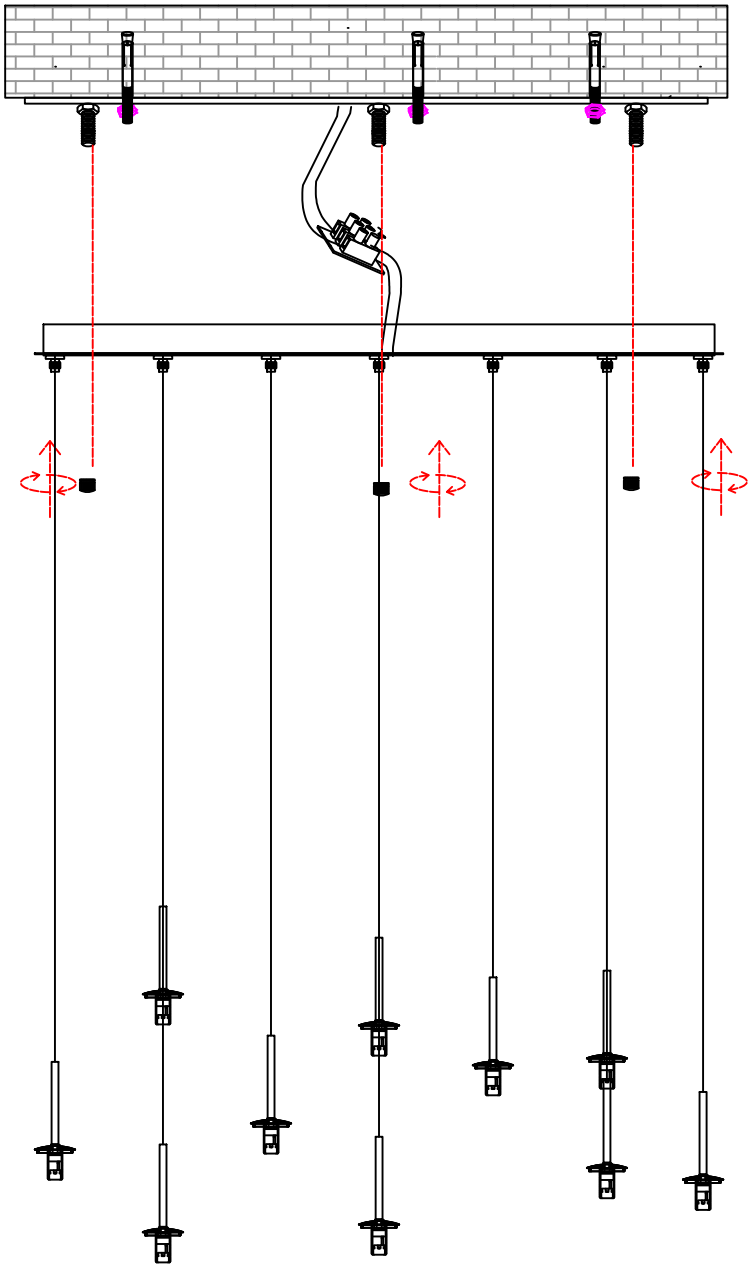

Step 2

3. Glass Lampshade Installation :
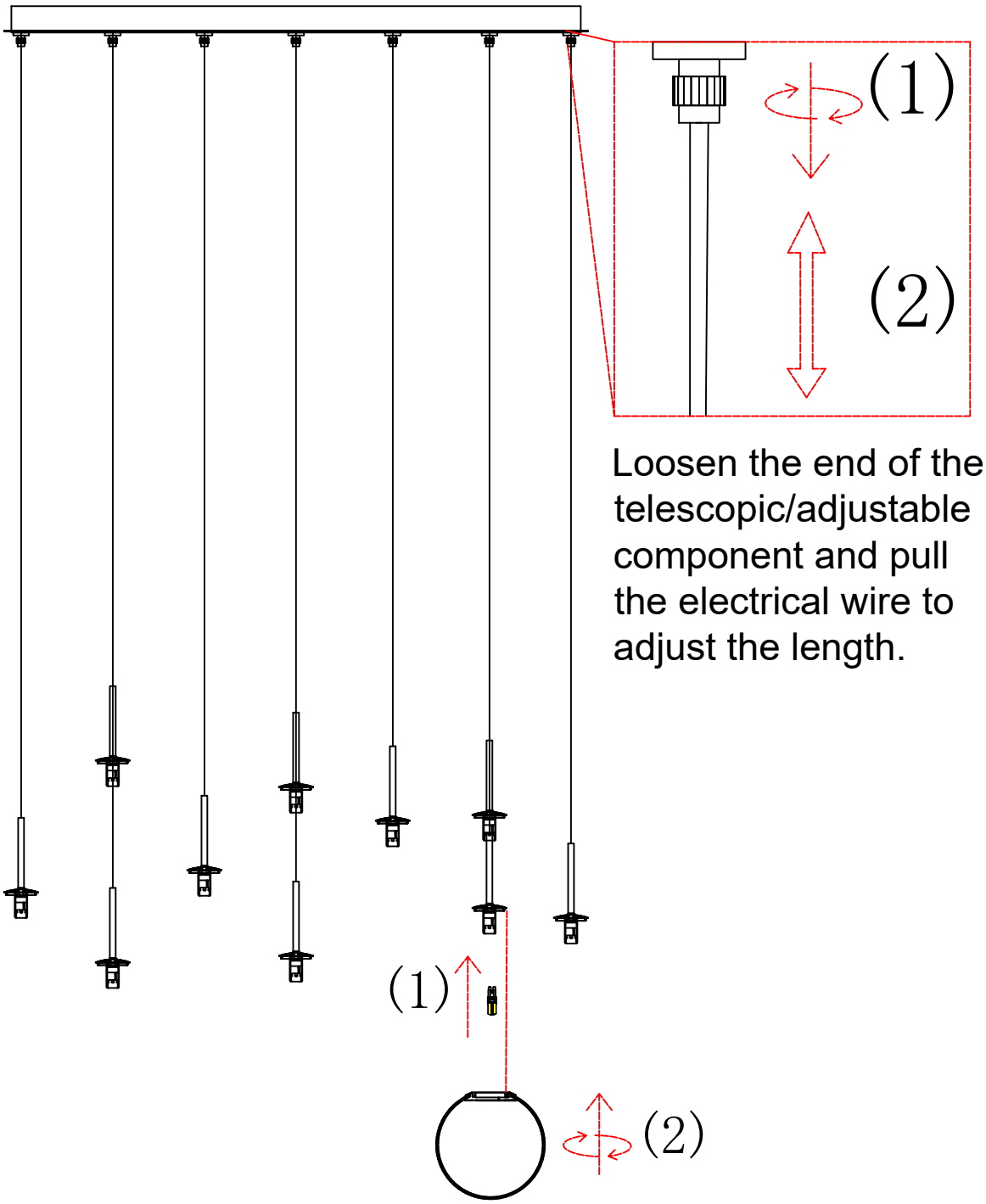
(1) Install the light bulbs first, then attach the glass shades.