TV Cabinet

User Manual

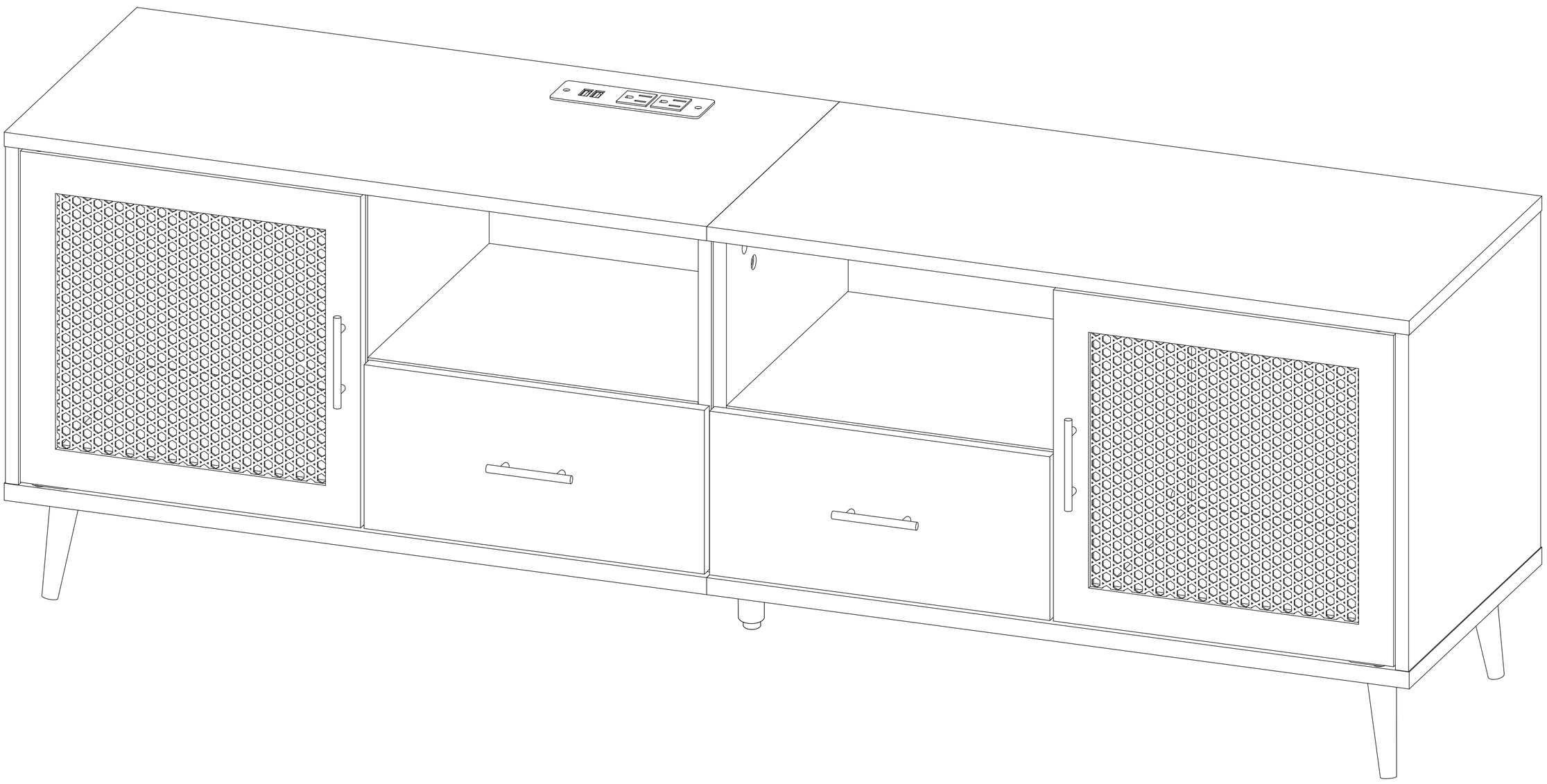

Customer Service Emails
US@JANFLY.COM
EU@JANFLY.COM

JFLDSG2512
JFLDSG2513

Version:2.0

INTRODUCTION

Thank you for purchasing our products.Committed to providing customers with the best quality products and service has always been our lifelong goal. Before using the product, please read this instruction manual carefully to ensure correct use. Keep the instruction manual in a place where the user can find it at any

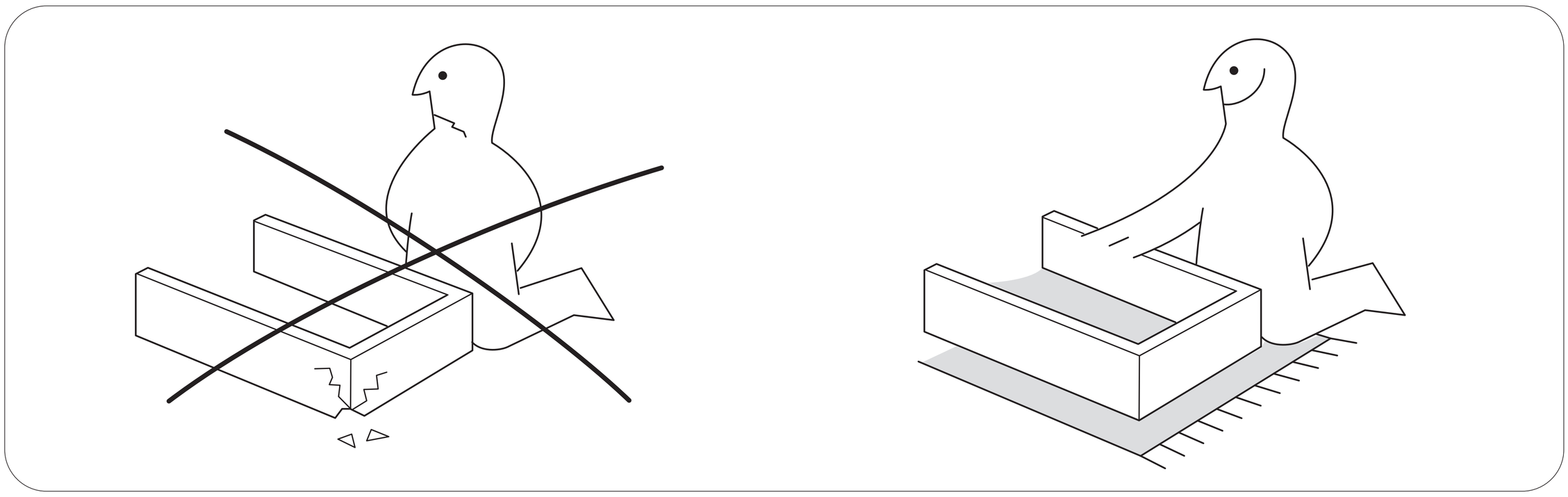

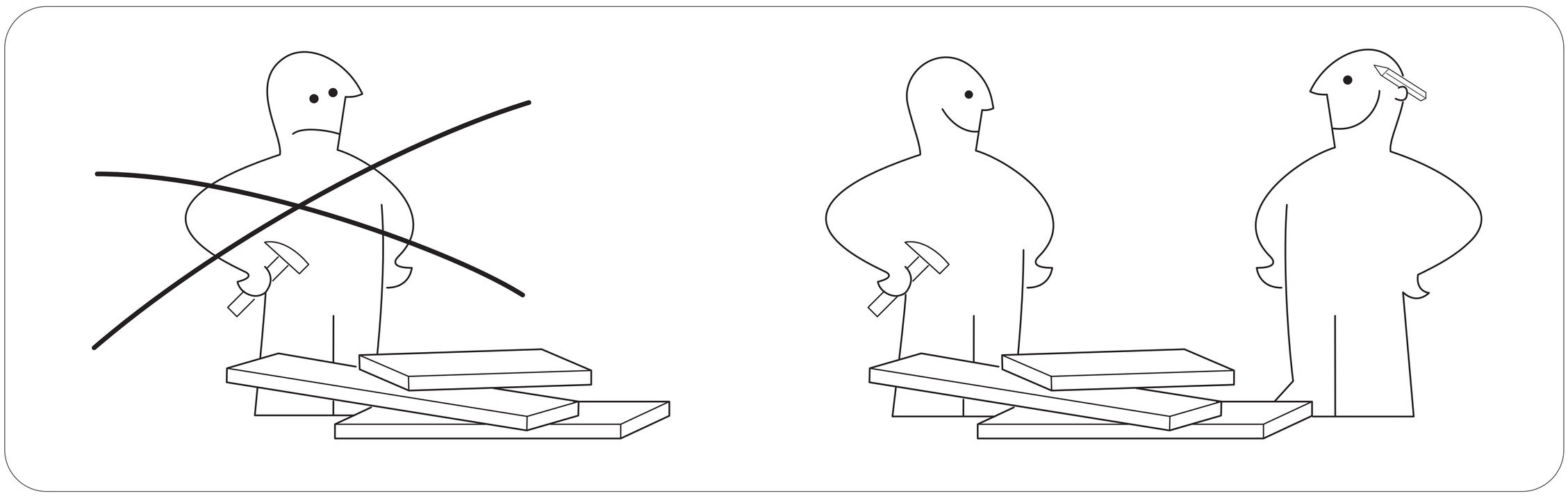

PRECAUTIONS

1.There are many components and accessories in the package. Each component and accessory is labeled with a letter or a number, check carefully before using any of them Keep them away from children to prevent accidents.
2.Please install the product on a clean and soft underlay (such as carpet or cardboard fo avoid scratching or damaging the surface of the product.
3.The main components of the product is relatively heavy. Please pay attention to safety during installation.
4.The product is not stable during installation. Please do not move it randomly before it is completely installed.
5.If you have any questions during installation, please contact the customer service in time.

*PLEASE BE SURE TO FOLLOW THE INSTALLATION STEPS IN THE MANUAL TO AVOID UNNECSSARY LOSSES CAUSED BY IMPROPER INSTALLATION.
*IF YOU NEED FUTHER ASSIATANCE,PLEASE CONTACT THE CUSTOMER SERVICE

PANEL LAYOUT

Scan QR Code
Watch Installation Video

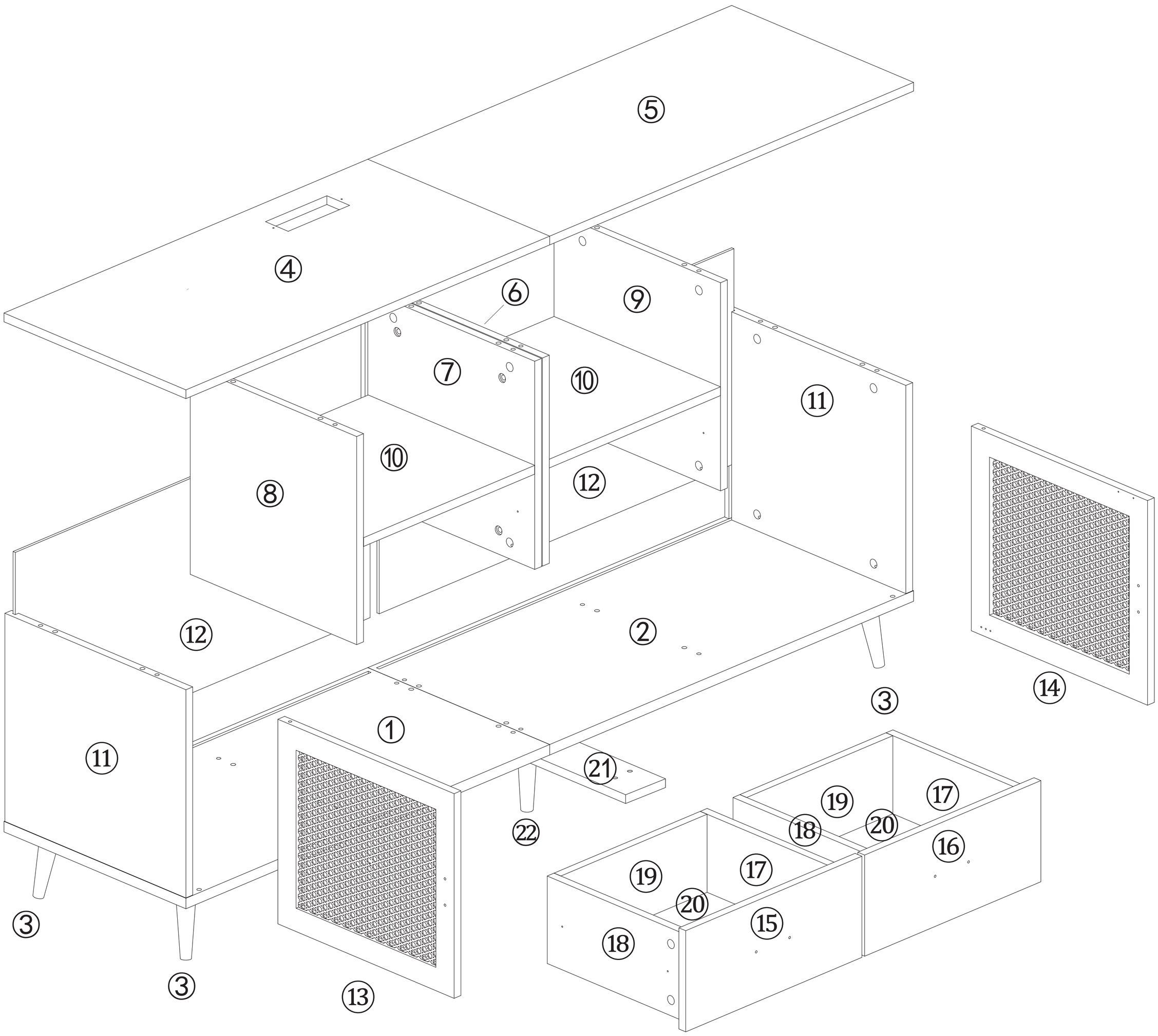

Due to the large number of boards,in order to facilitate the installation, please place the boards in order after opening the parcel and then start the installation.

PARTS LIST

①

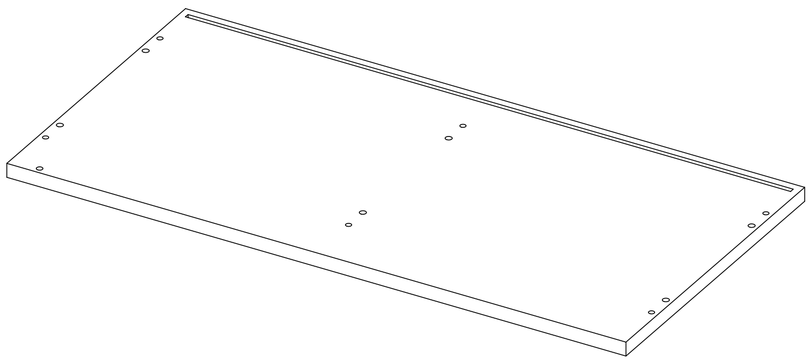

1pcs

②

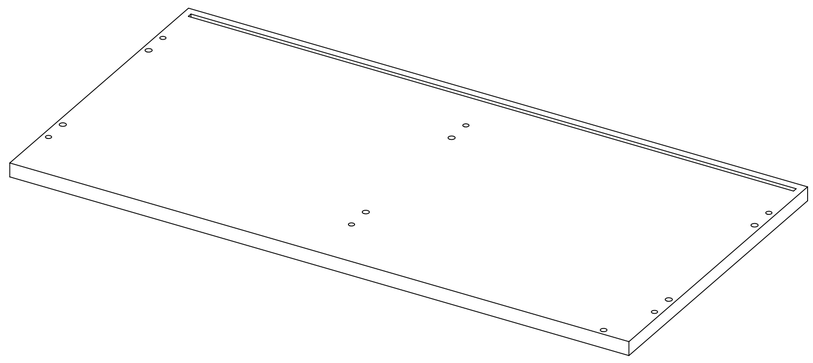

1pcs

③

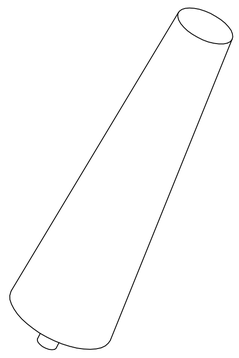

4pcs

④

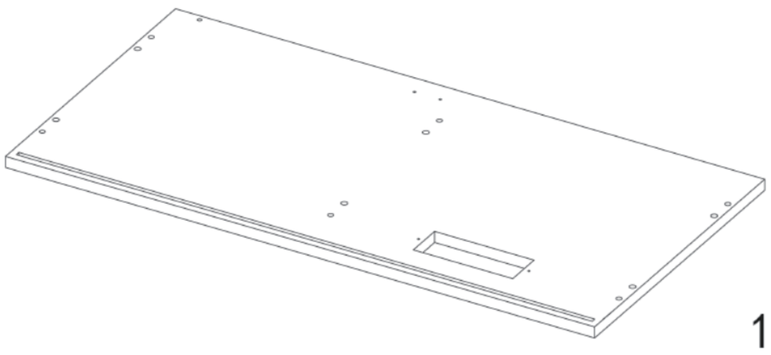

1pcs

⑥

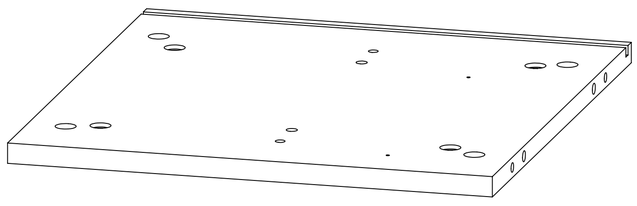

1pcs

⑧

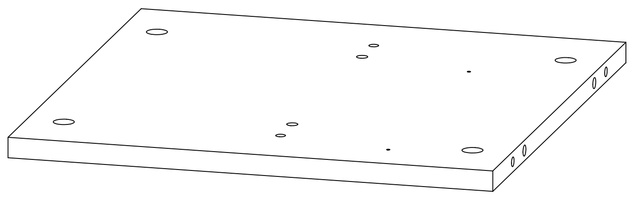

1pcs

⑤

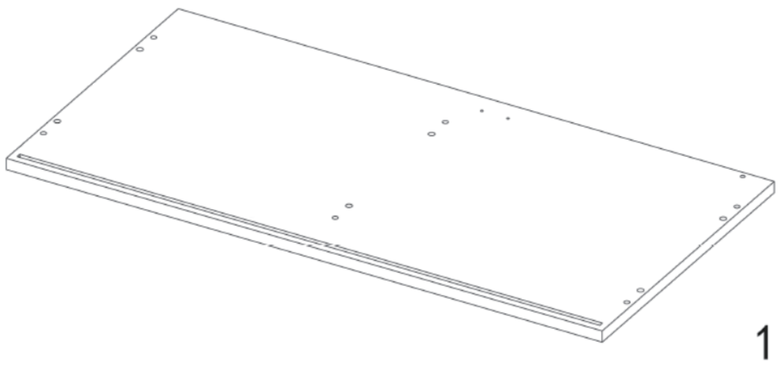

1pcs

⑦

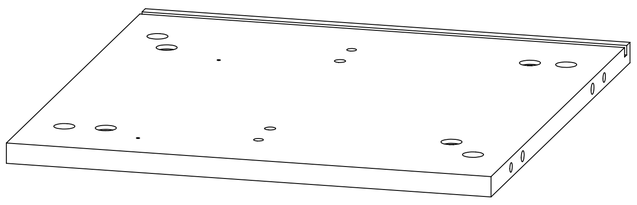

1pcs

⑨

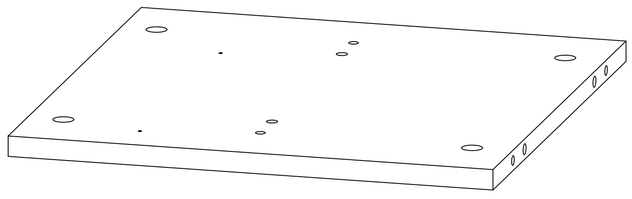

1pcs

⑩

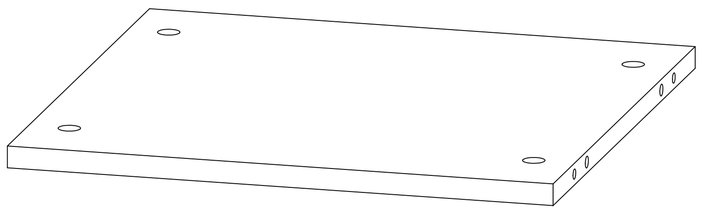

2pcs

⑫

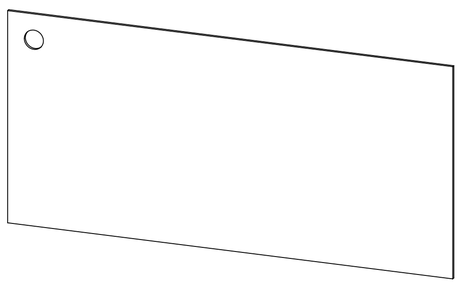

2pcs

⑭

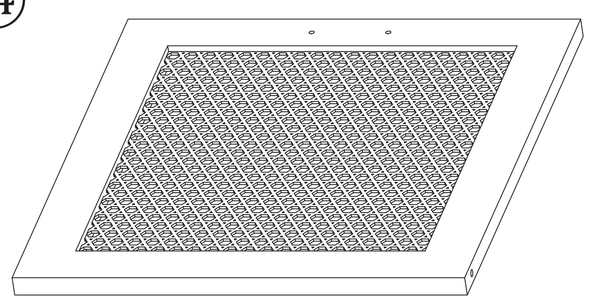

1pcs

⑪

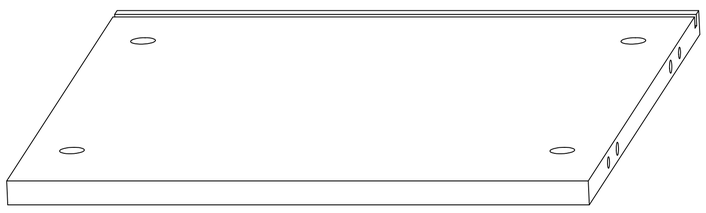

2pcs

⑬

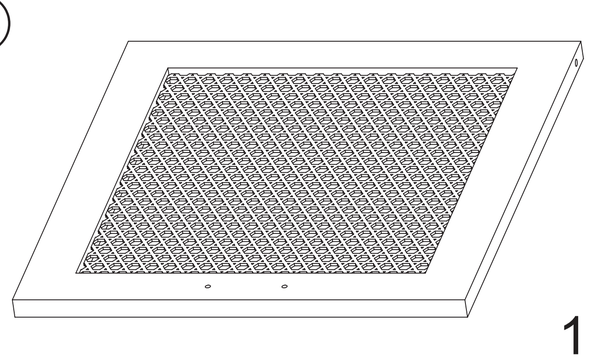

1pcs

⑮

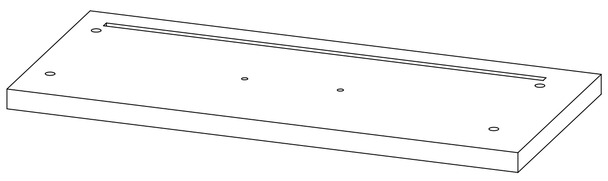

1pcs

⑯

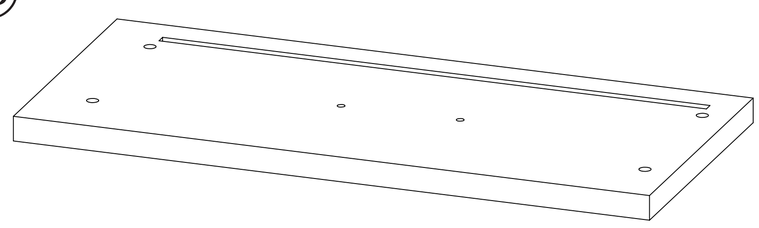

1pcs

⑰

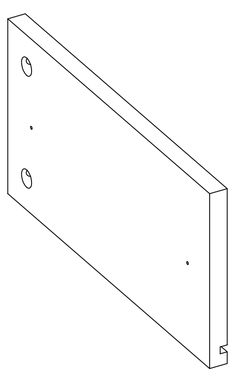

2pcs

⑱

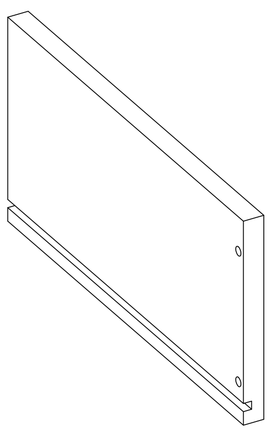

2pcs

⑲

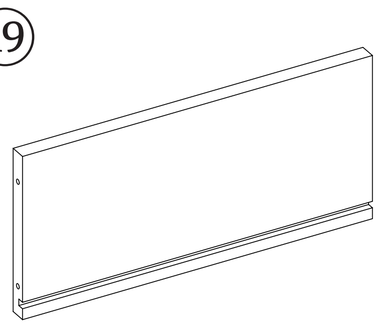

2pcs

⑳

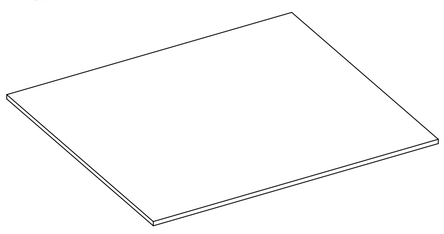

2pcs

㉑

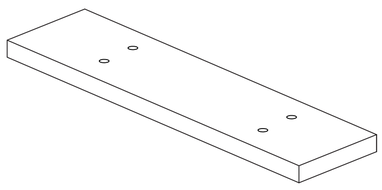

1pcs

㉒

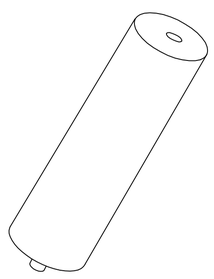

1pcs

HARDWARE LIST

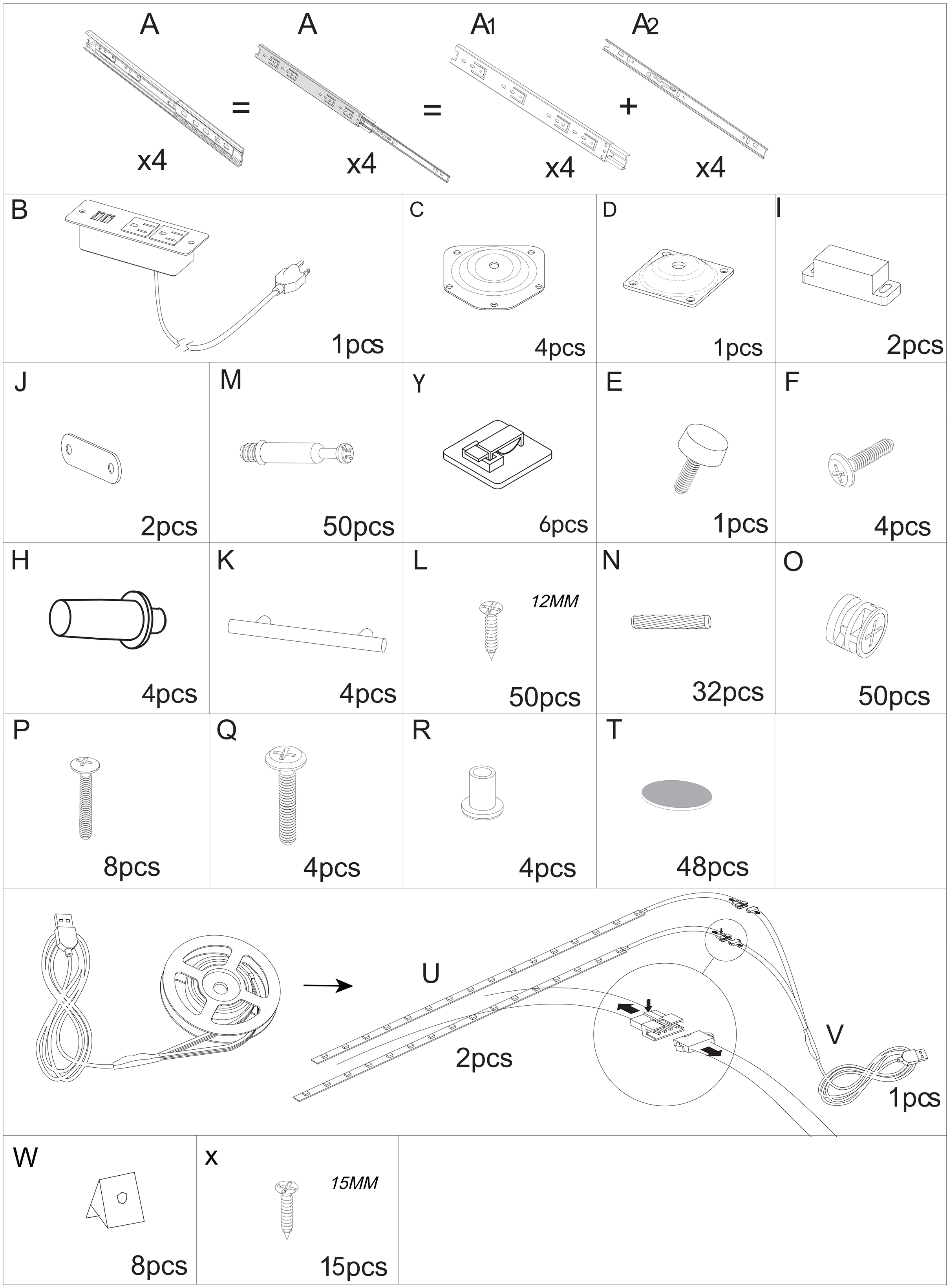

TIPS

1. When installing the product, use a soft surface (such as carpet or cardboard) to avoid scratching or damaging the surface of the product.
2. Please try to use a manual screwdriver instead of electric screw driver. A manual screw-driver can be used to better control the tightness of the screws.
3. Do not use any glue.
4. The product is unstable before it is assembled. Please pay attention to the product installation sequence, and align all screws and screw holes before tightening.
5. The structure of this product can not meet the requirements of children climbing.

Installation method of three in one rod and buckle

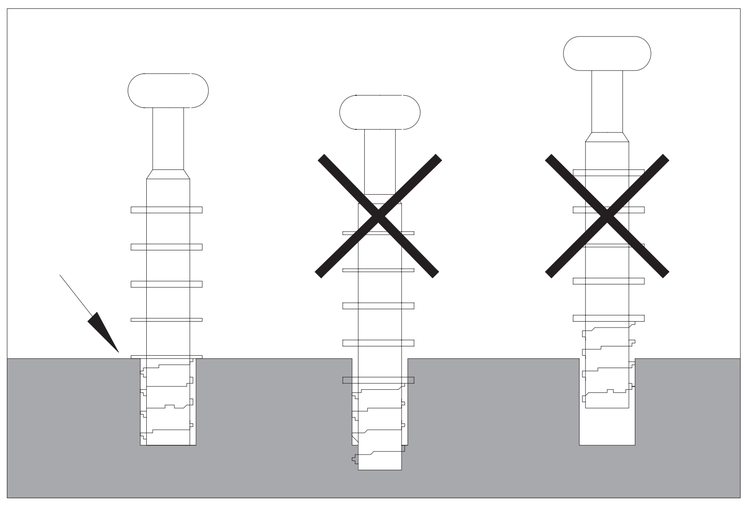

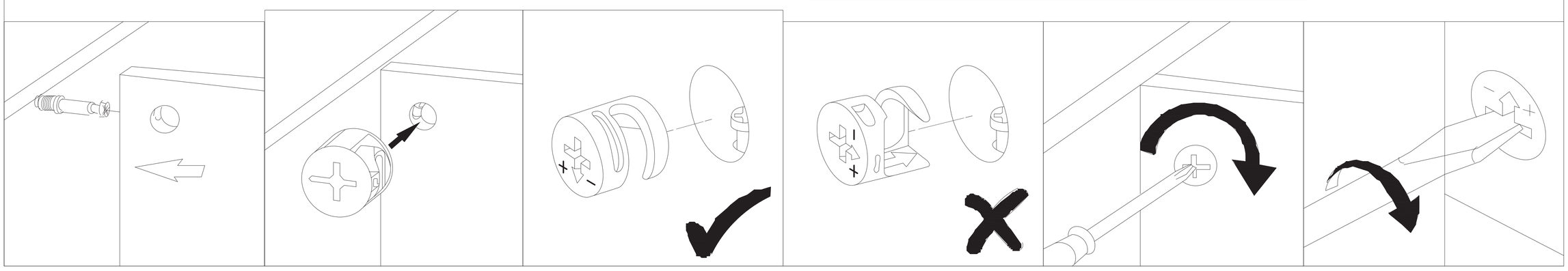

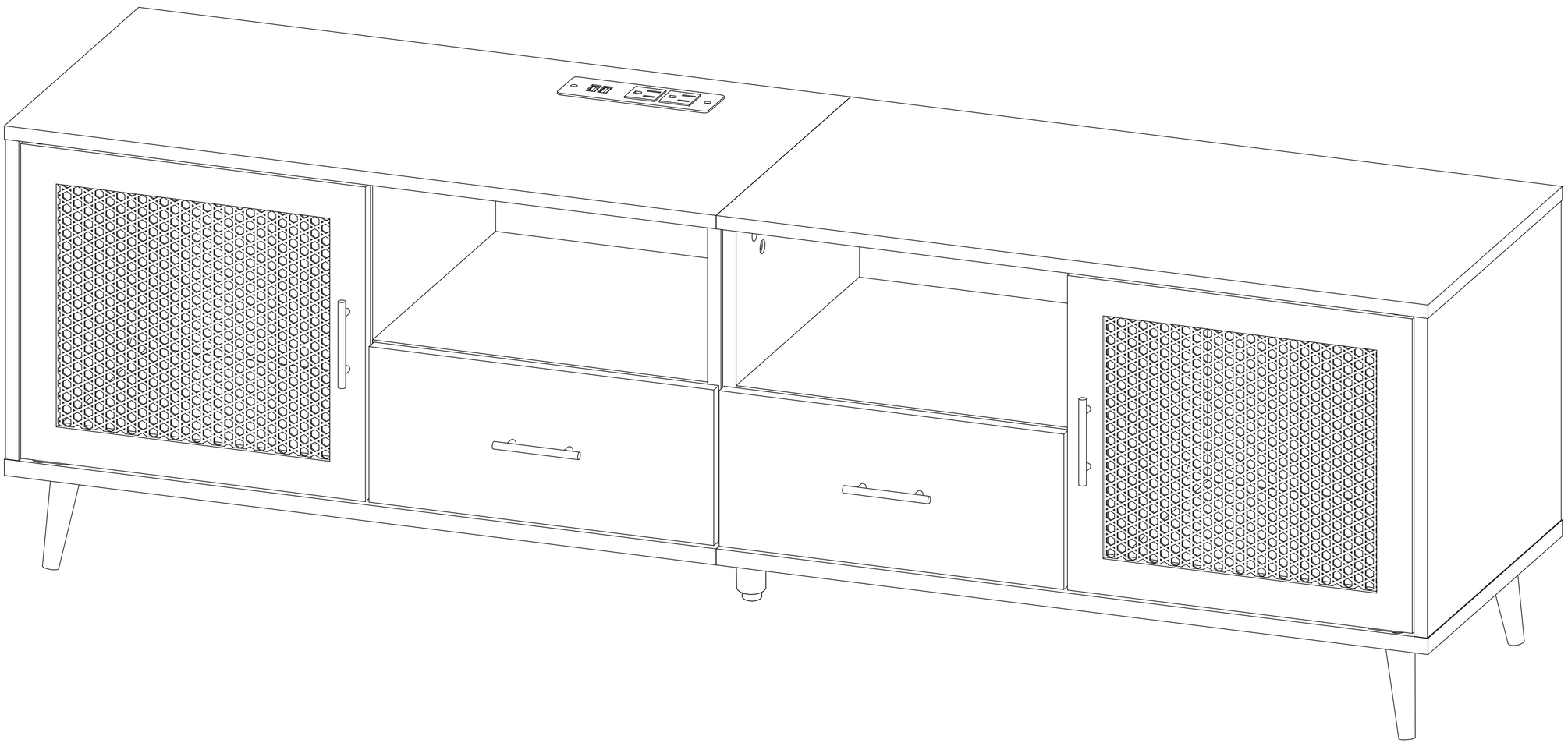

1

HOW TO SPLIT THE SLIDE RAIL

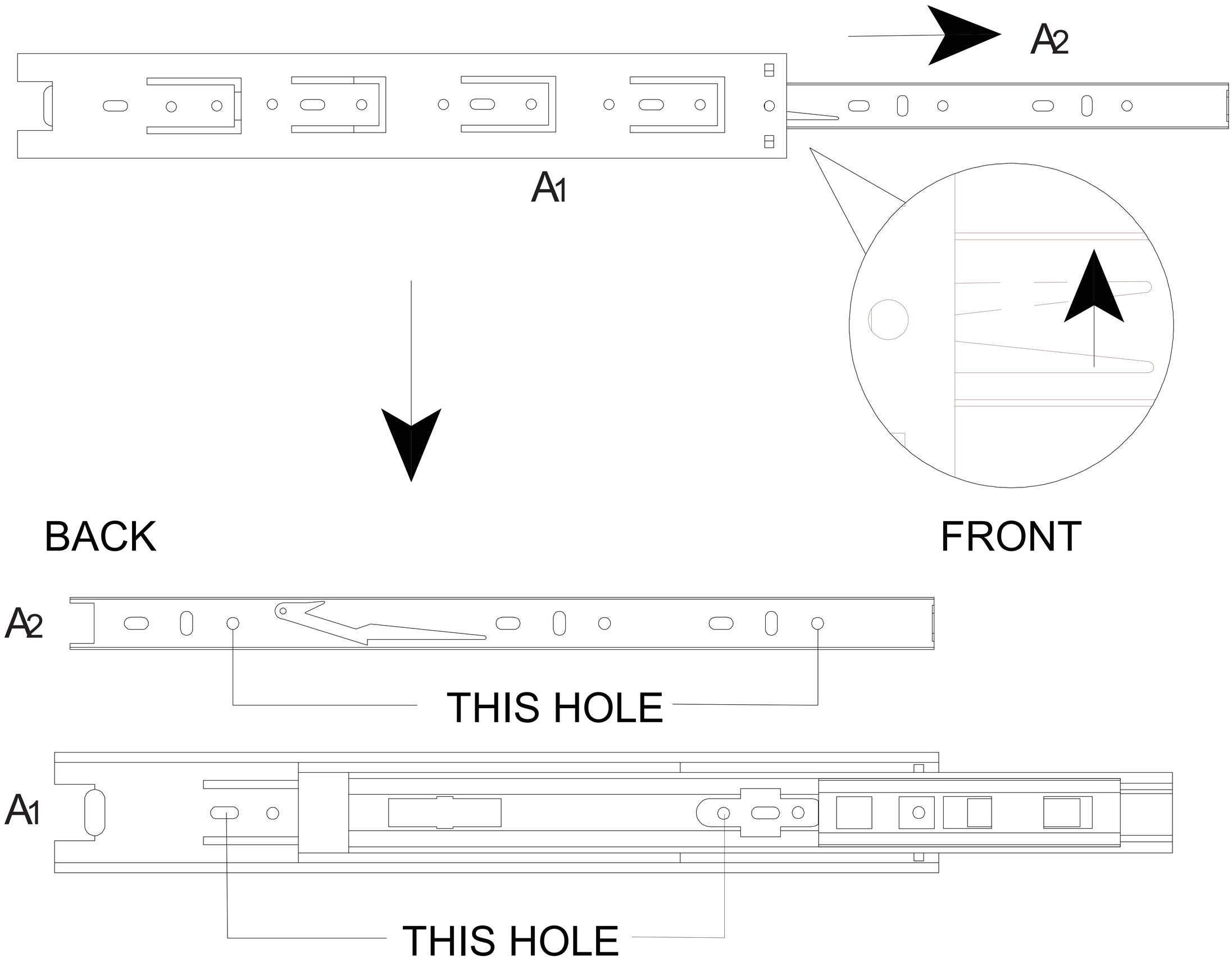

2

You will need					
C	x4	D	x1	L	x24
F	x4				

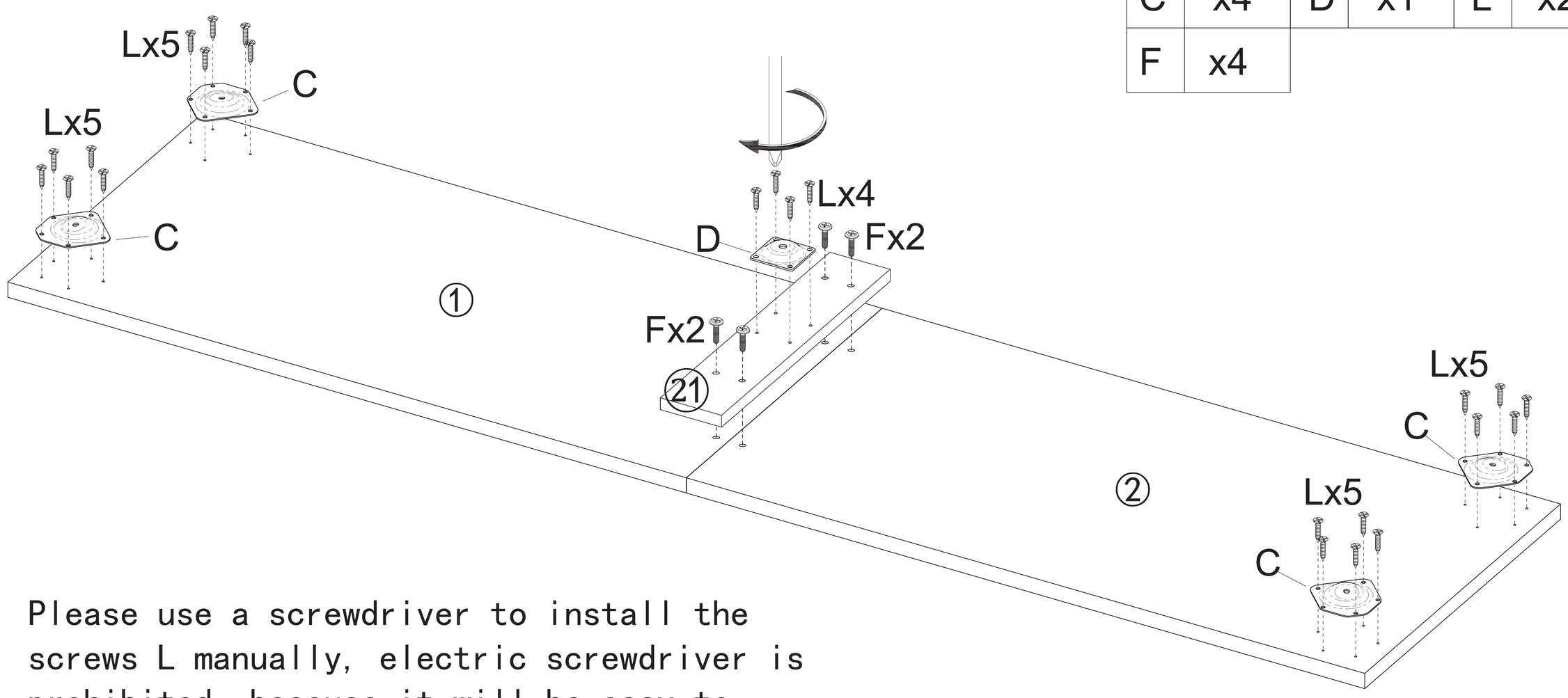

Please use a screwdriver to install the screws L manually, electric screwdriver is prohibited, because it will be easy to make the part 1&2 broken.

3

You will need			
③	x4	㉒	x1
E	x1		

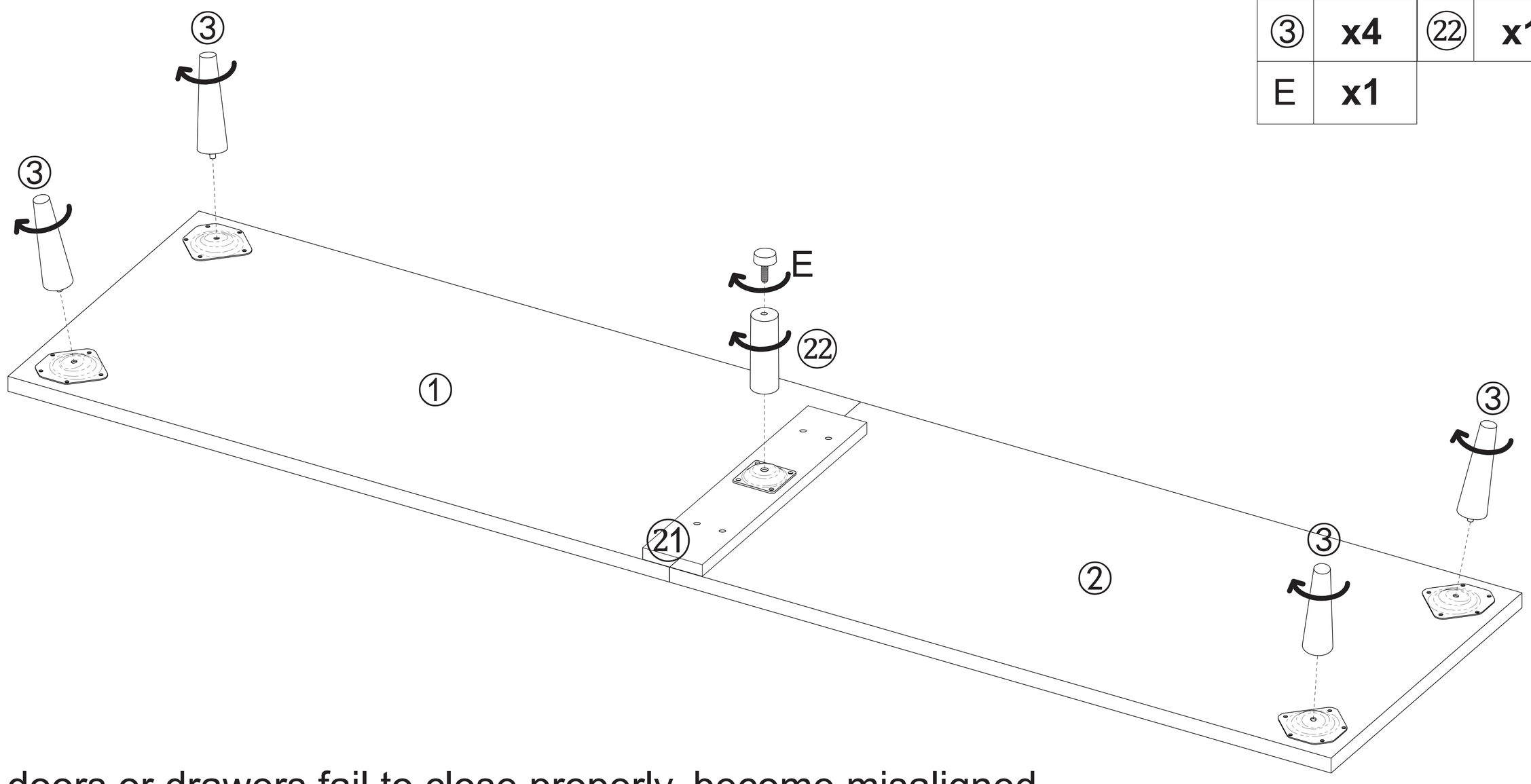

If doors or drawers fail to close properly, become misaligned,
or appear crooked, this may be caused by uneven flooring or legs sinking into carpeting.
Adjust the E-parts (adjustable glides) at the base of the center legs to restore the product to normal operation.

4

You will need			
M	x12	N	x12

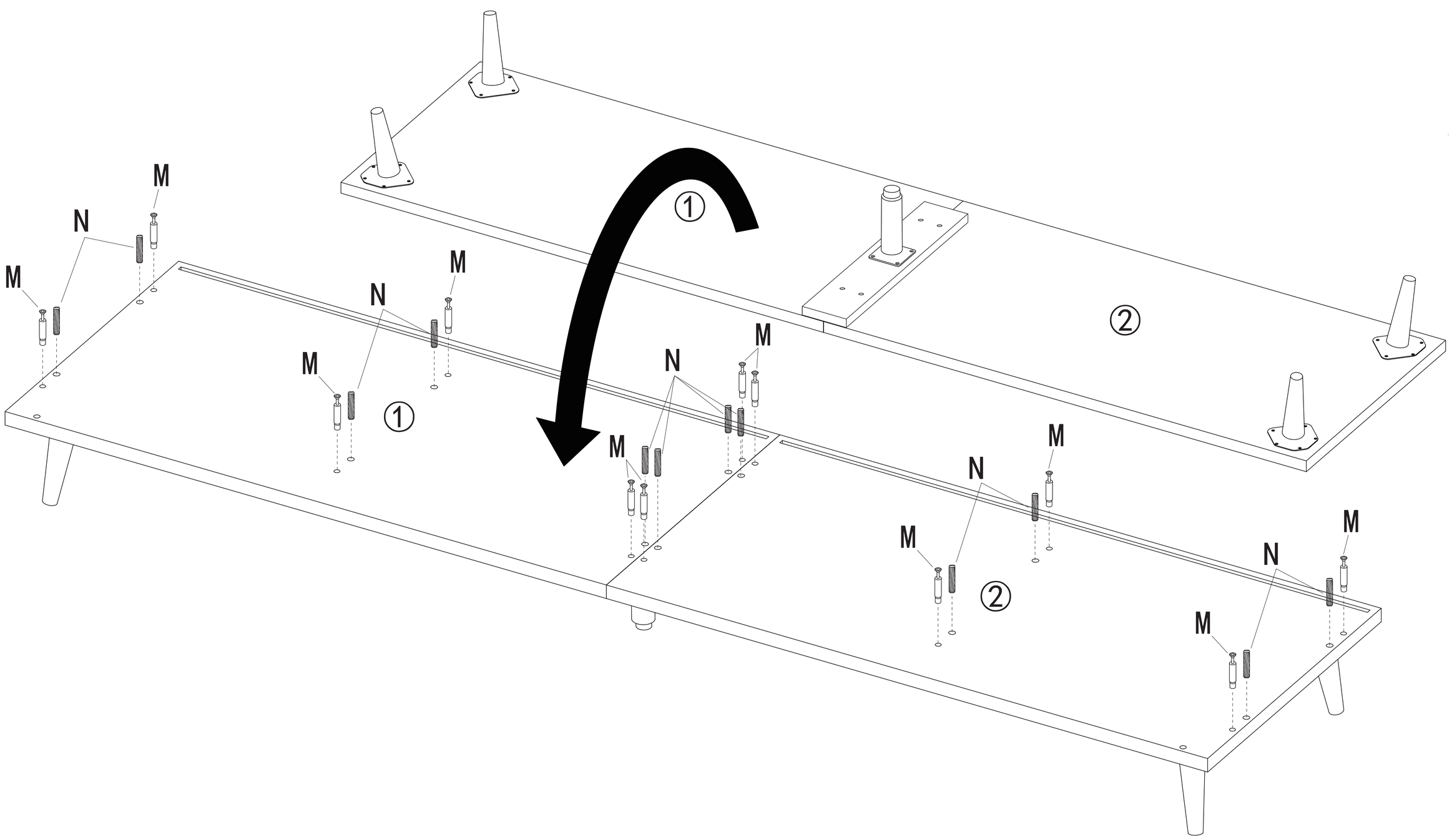

5

You will need							
A1	x2	L	x4	M	x4	N	x4

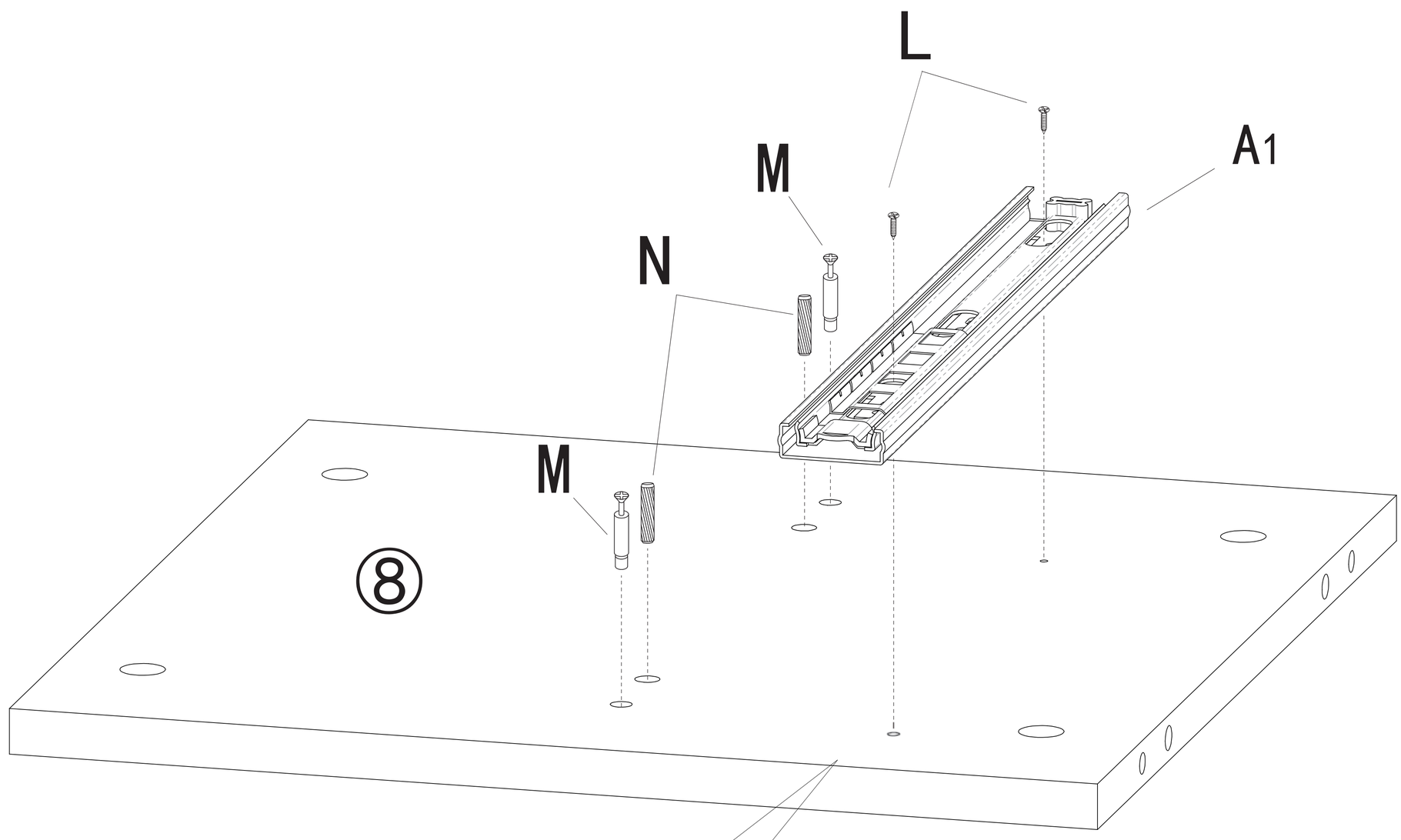

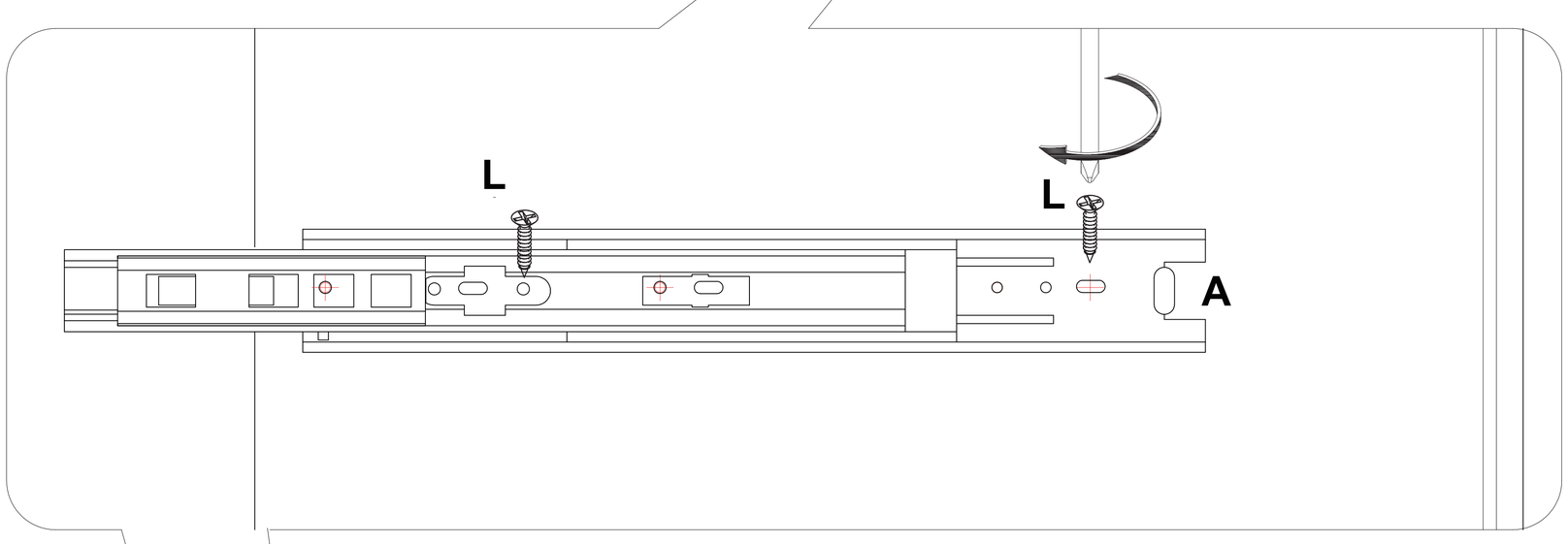

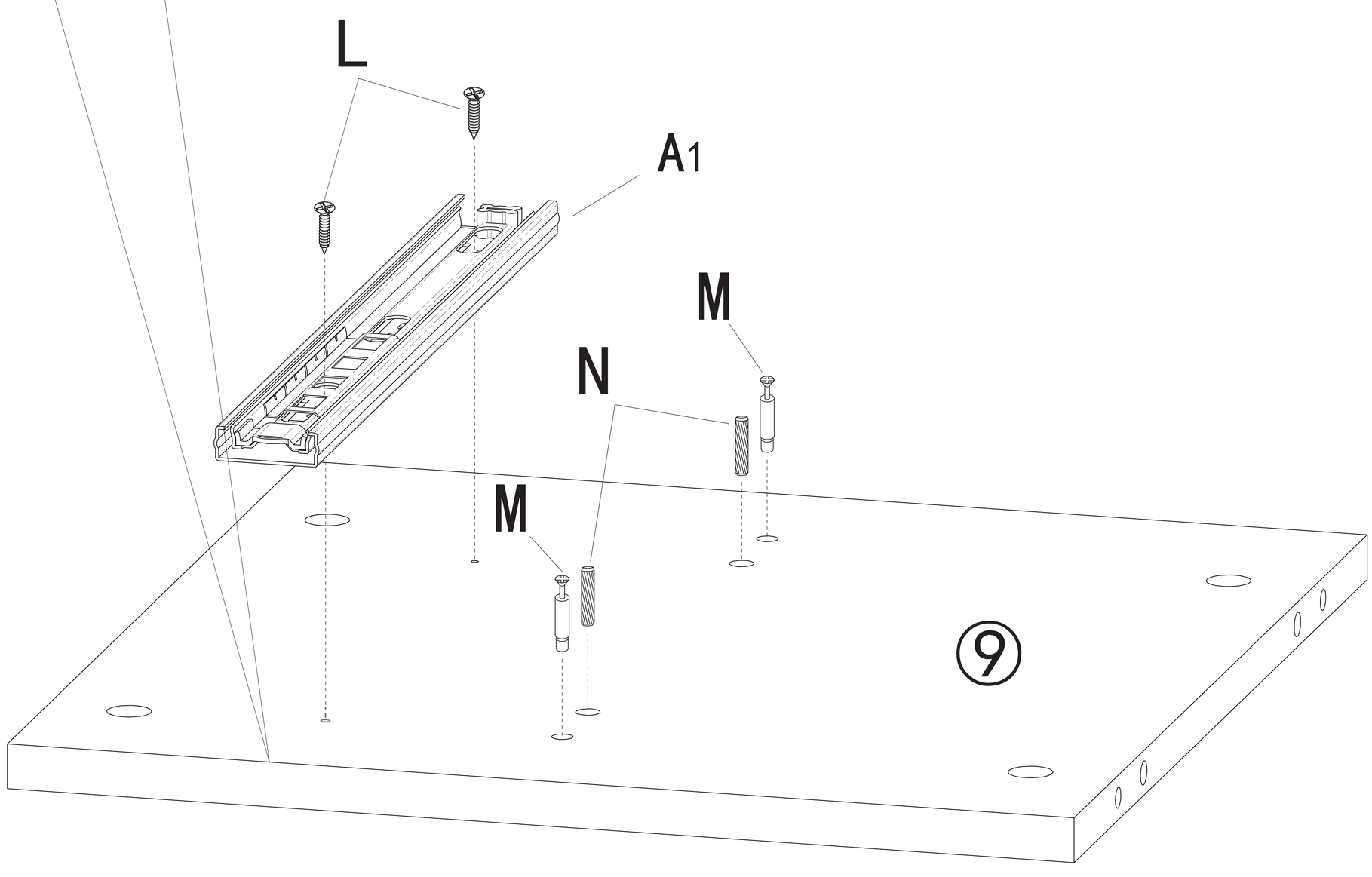

6

You will need							
A1	x2	L	x4	M	x4	N	x4

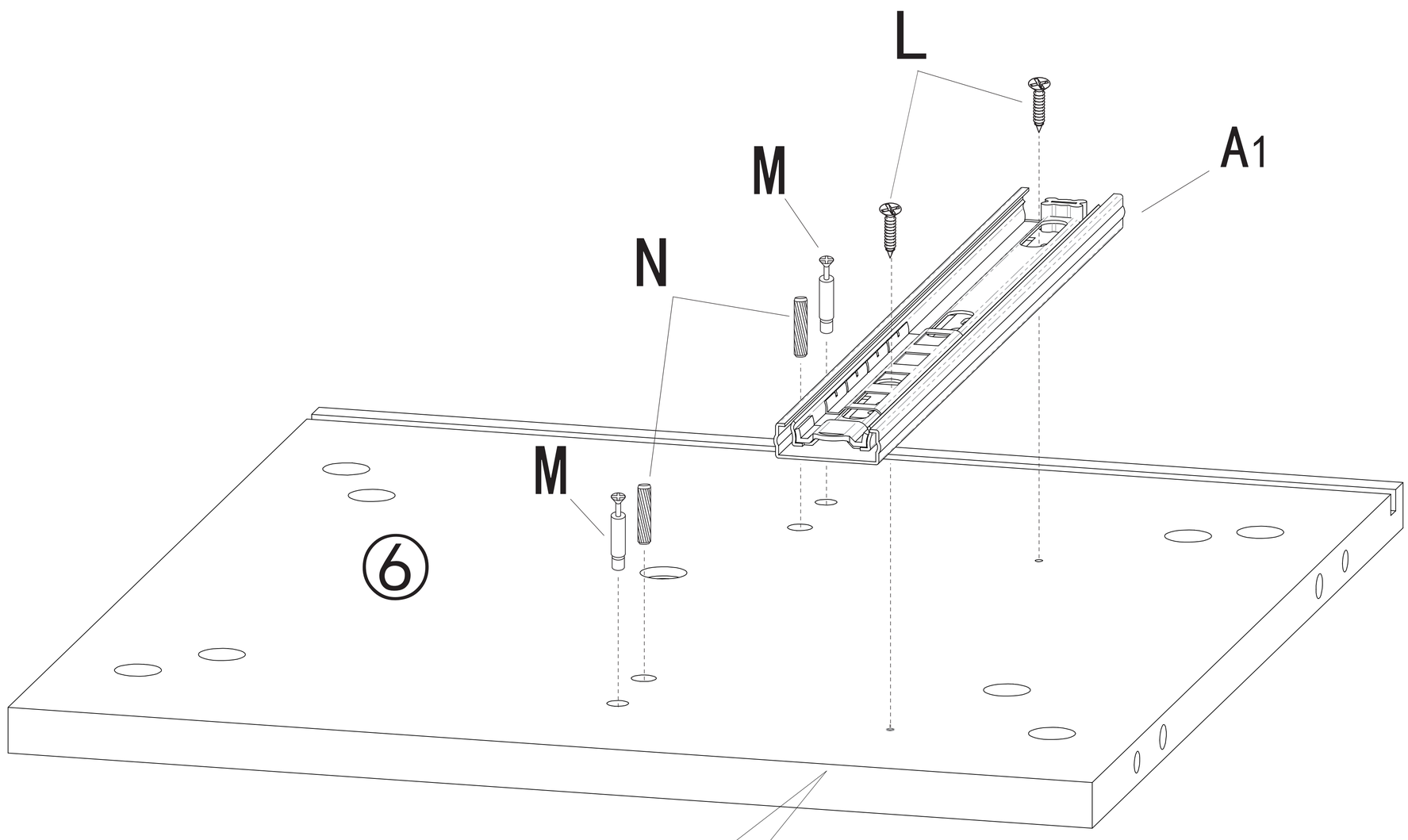

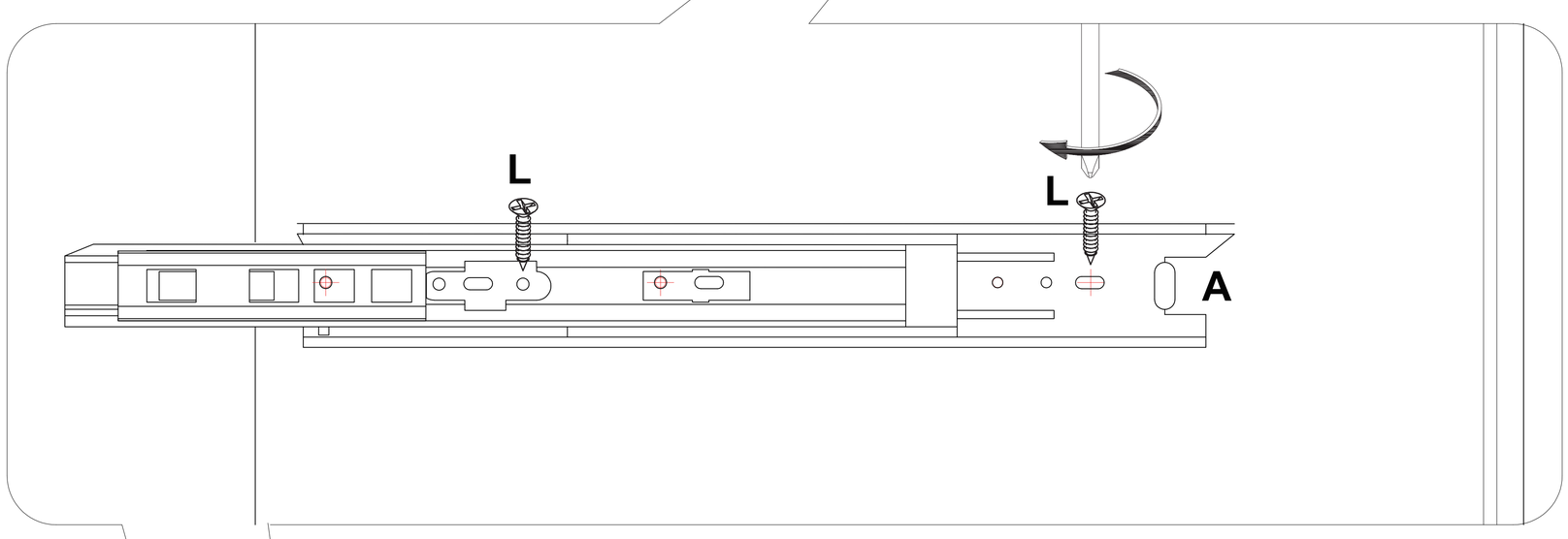

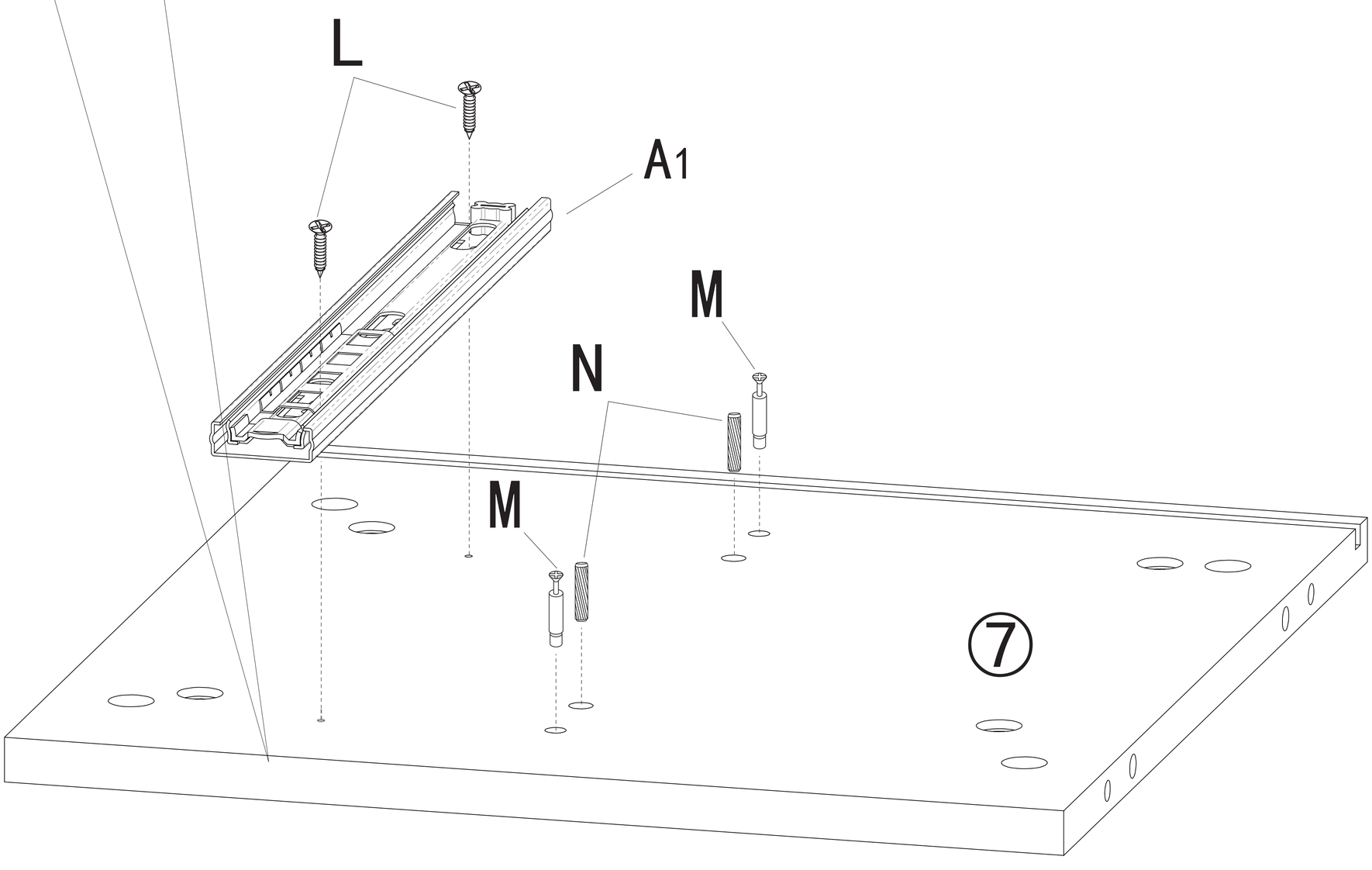

7

You will need			
O	x4	T	x4

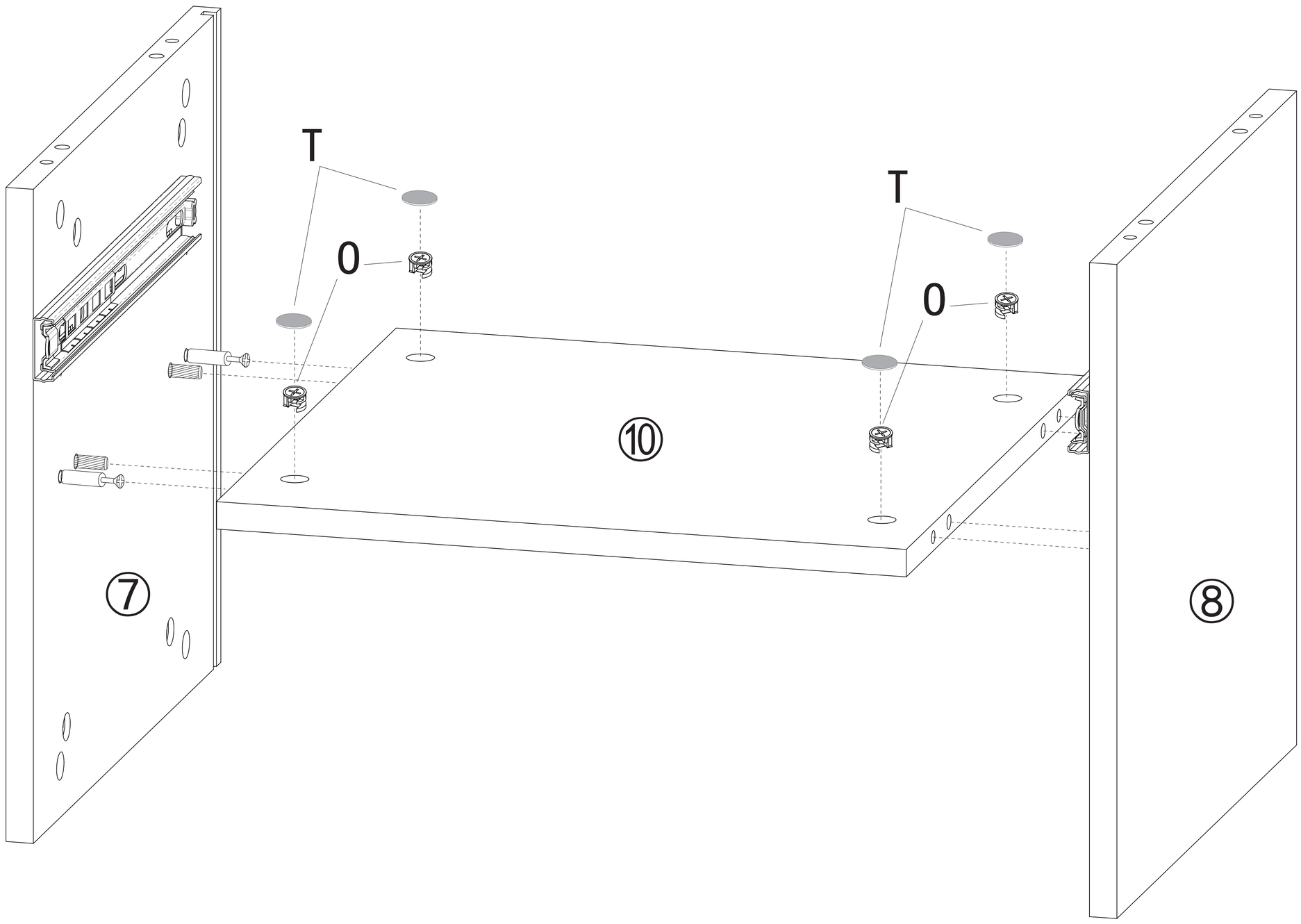

8

You will need			
O	x4	T	x4

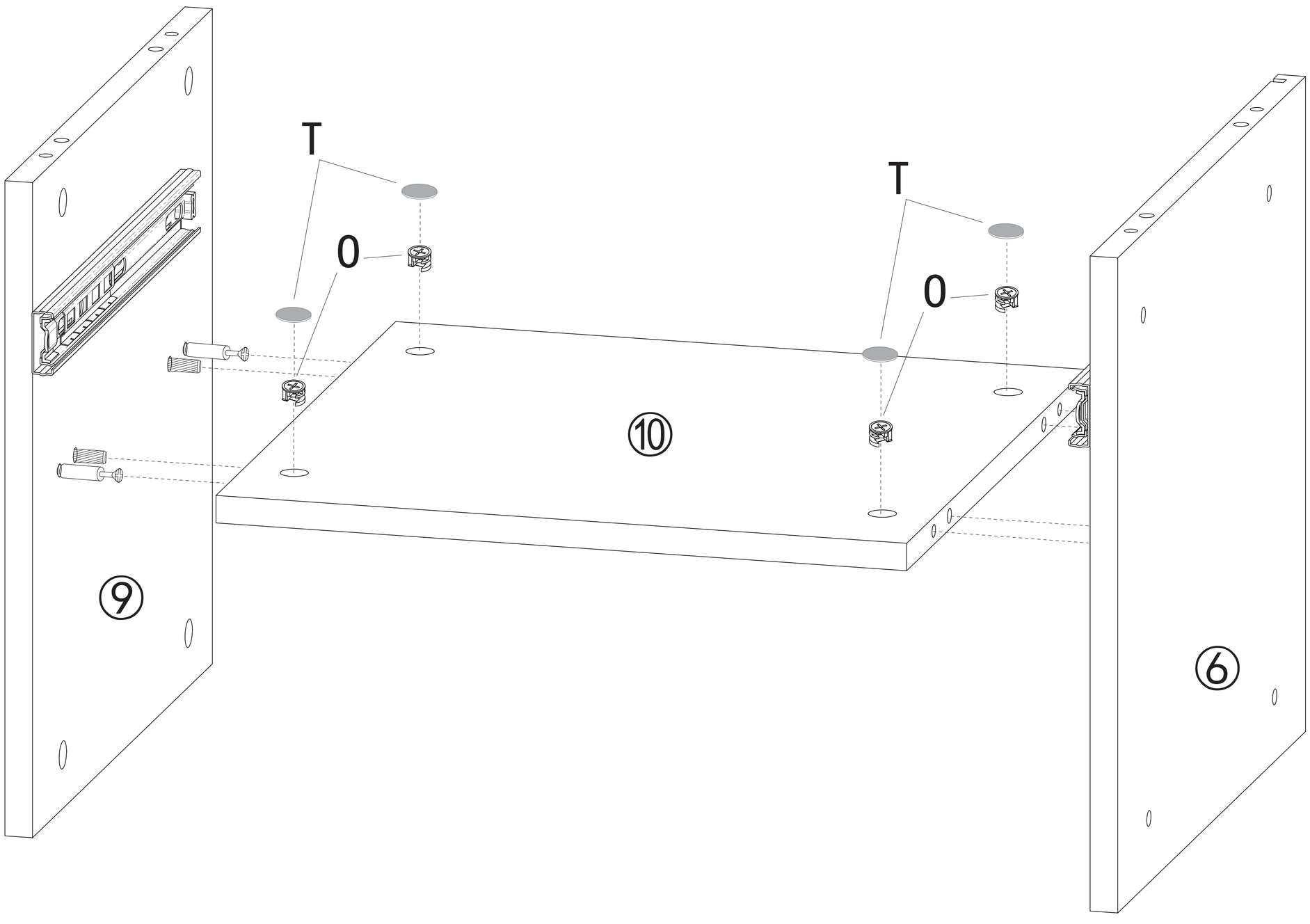

9

You will need			
O	x8	T	x8

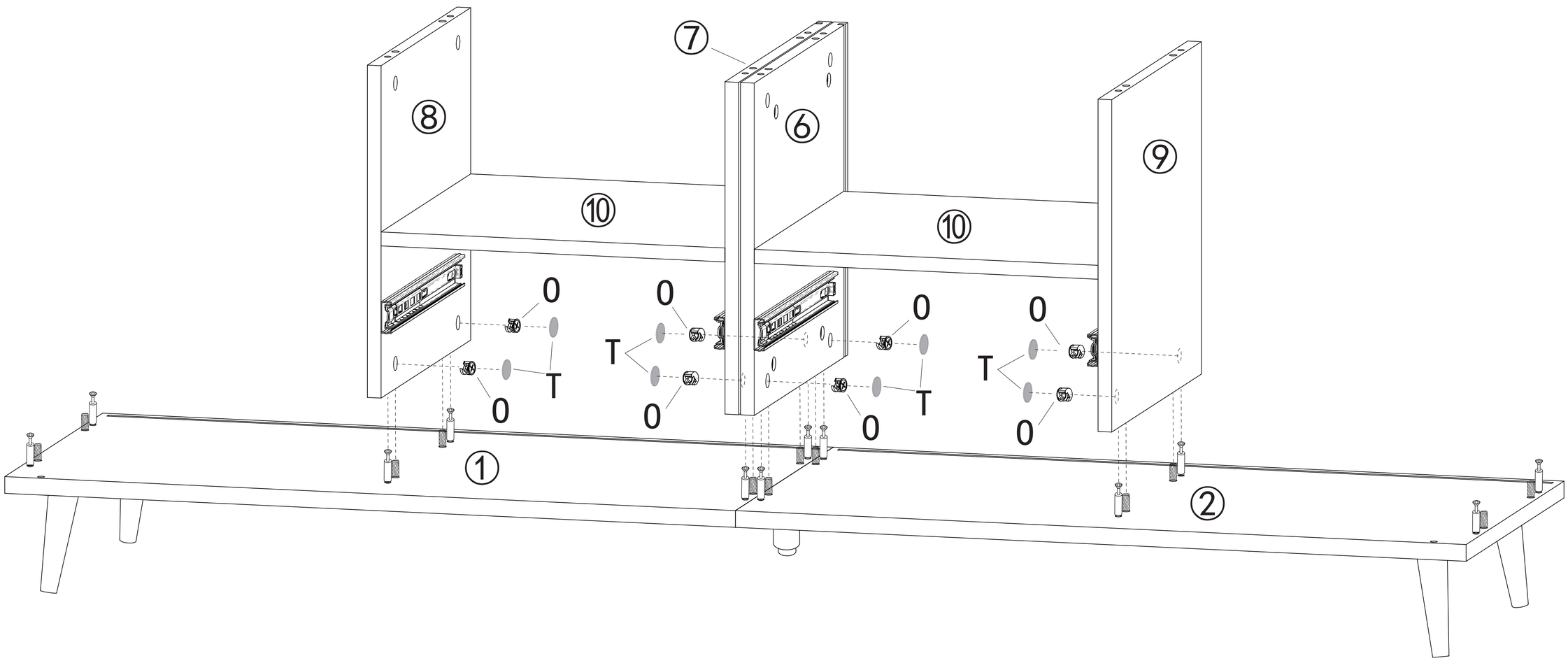

10

You will need			
O	x4	T	x4

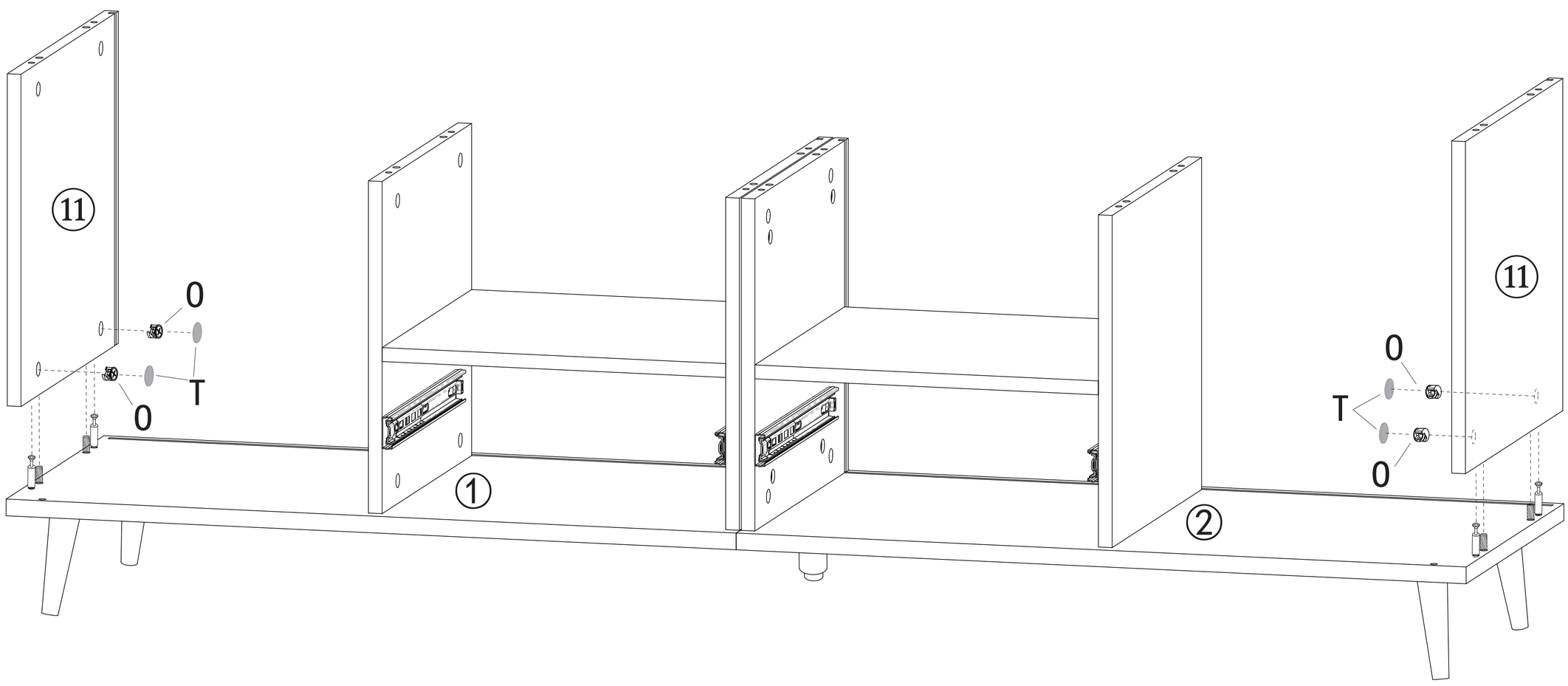

11

You will need			
⑫	x2		

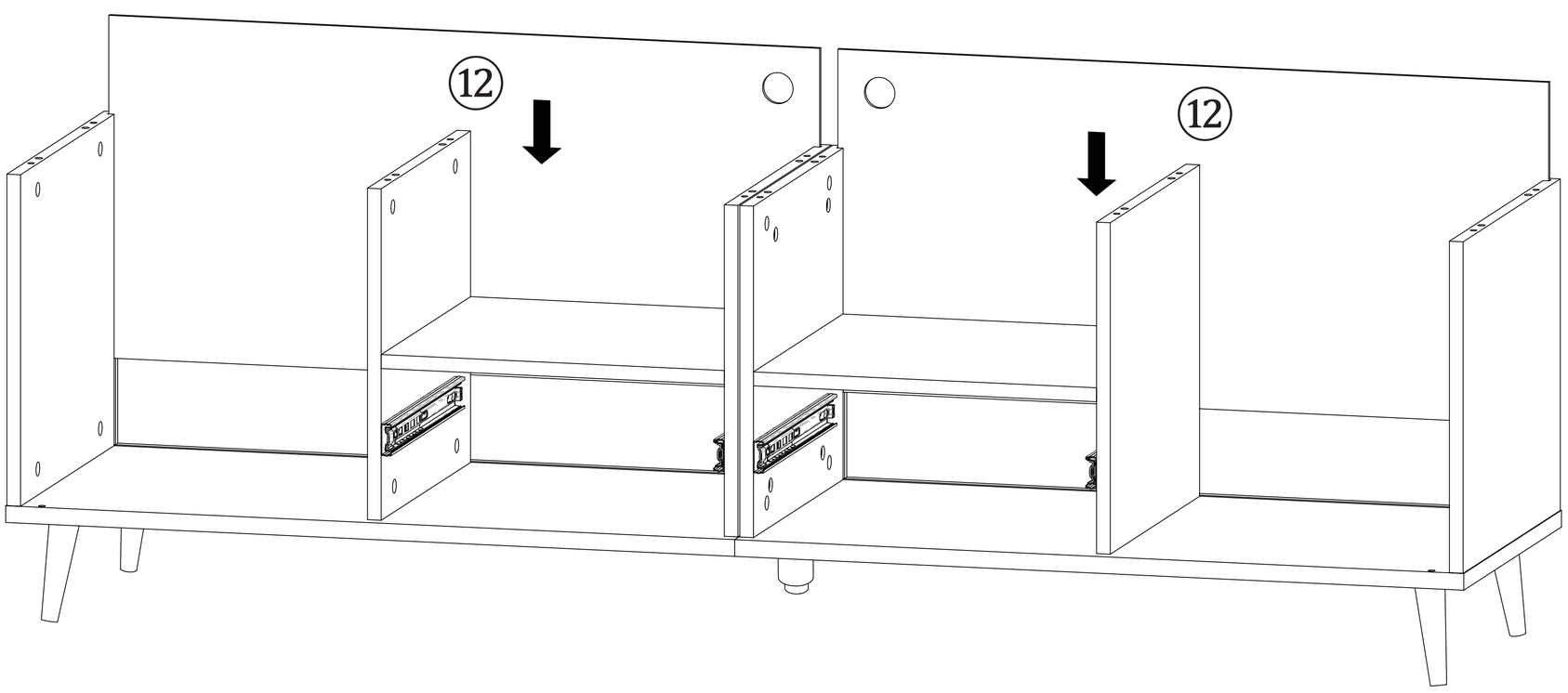

12

You will need							
I	x1	**X**	**x2**	M	x6	N	x6
U	x1	Y	x3				

As part I has an adjustable elliptical hole, you need to adjust the position of I before installing the screw X. After adjustment, part I will have enough suction to ensure that the cabinet door closes properly during use.

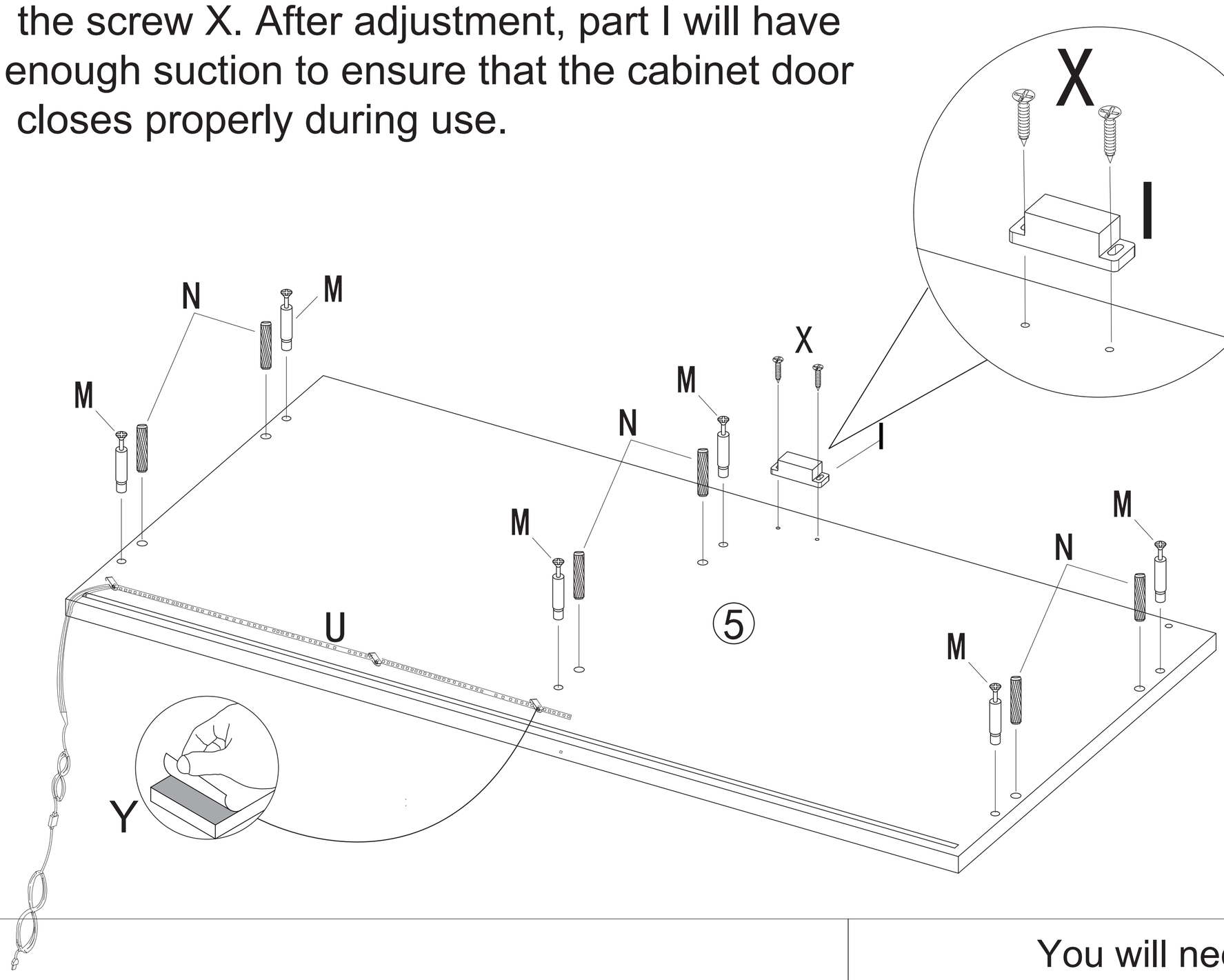

13

You will need							
I	x1	**X**	**x2**	**Mx6**		N	x6
U	x1	Y	x3				

As part I has an adjustable elliptical hole, you need to adjust the position of I before installing the screw X. After adjustment, part I will have enough suction to ensure that the cabinet door closes properly during use.

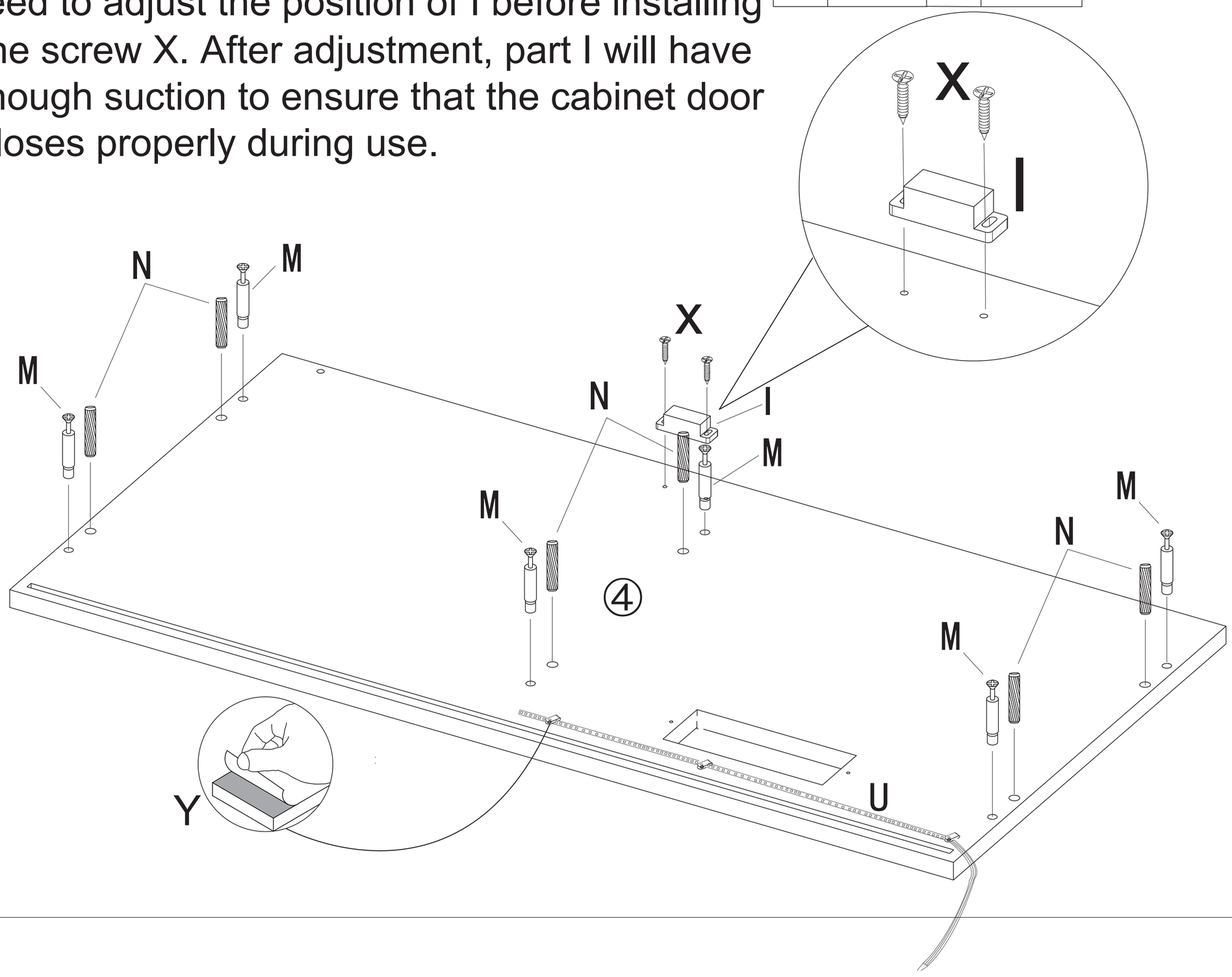

14

You will need			
O	x12	T	x12

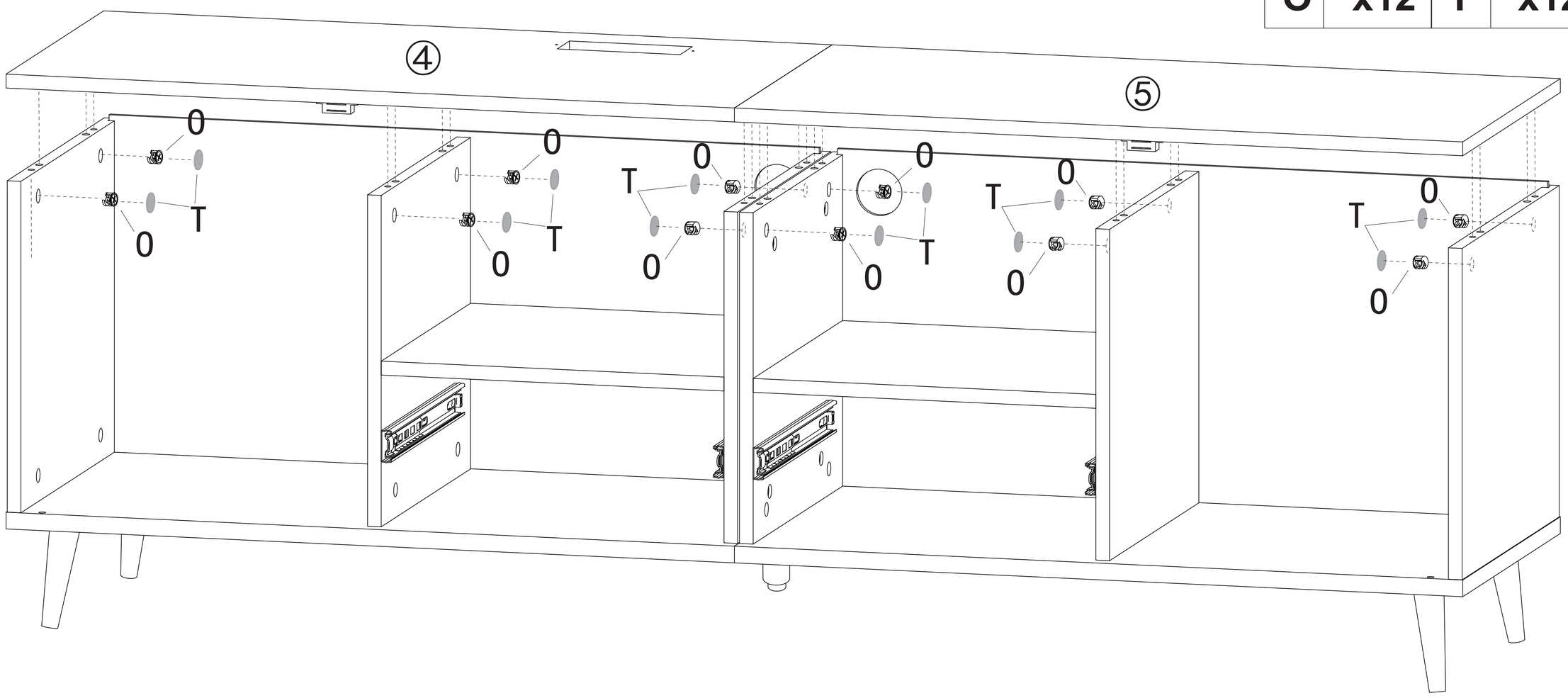

15

You will need									
Q	x4	R	x4						

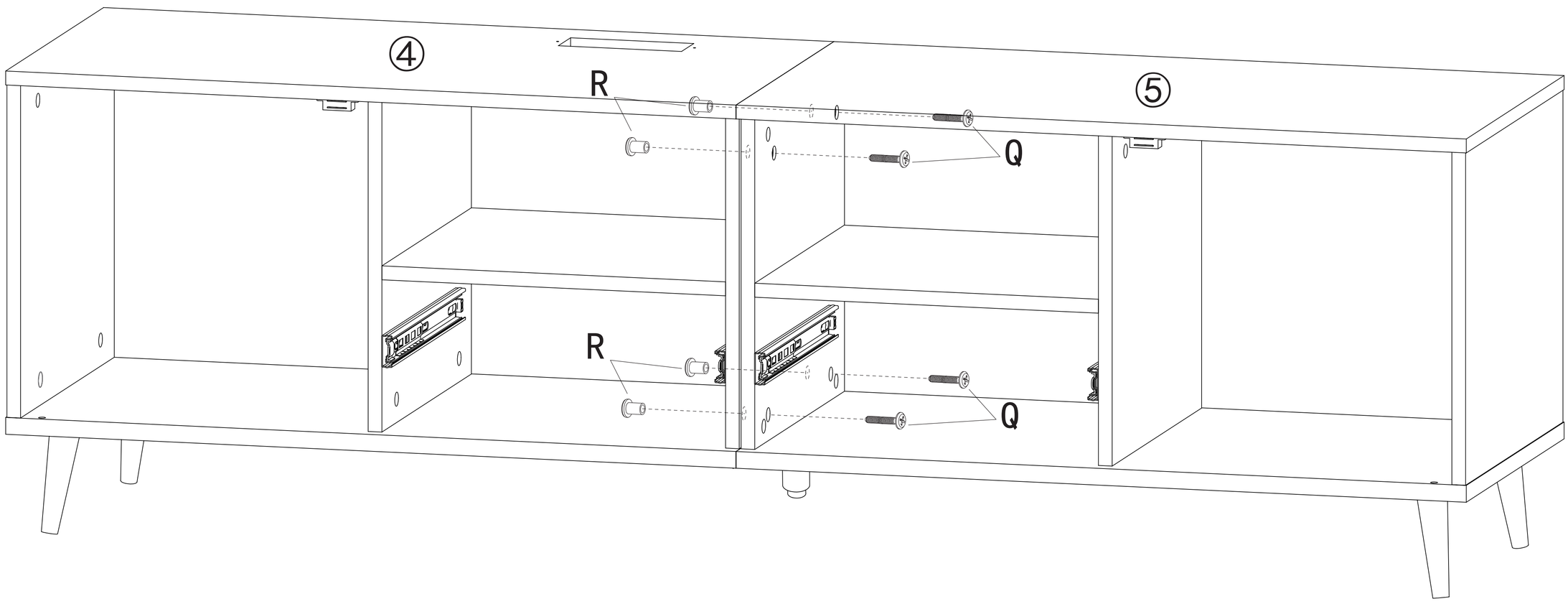

16

You will need					
W	x8	X	x8		

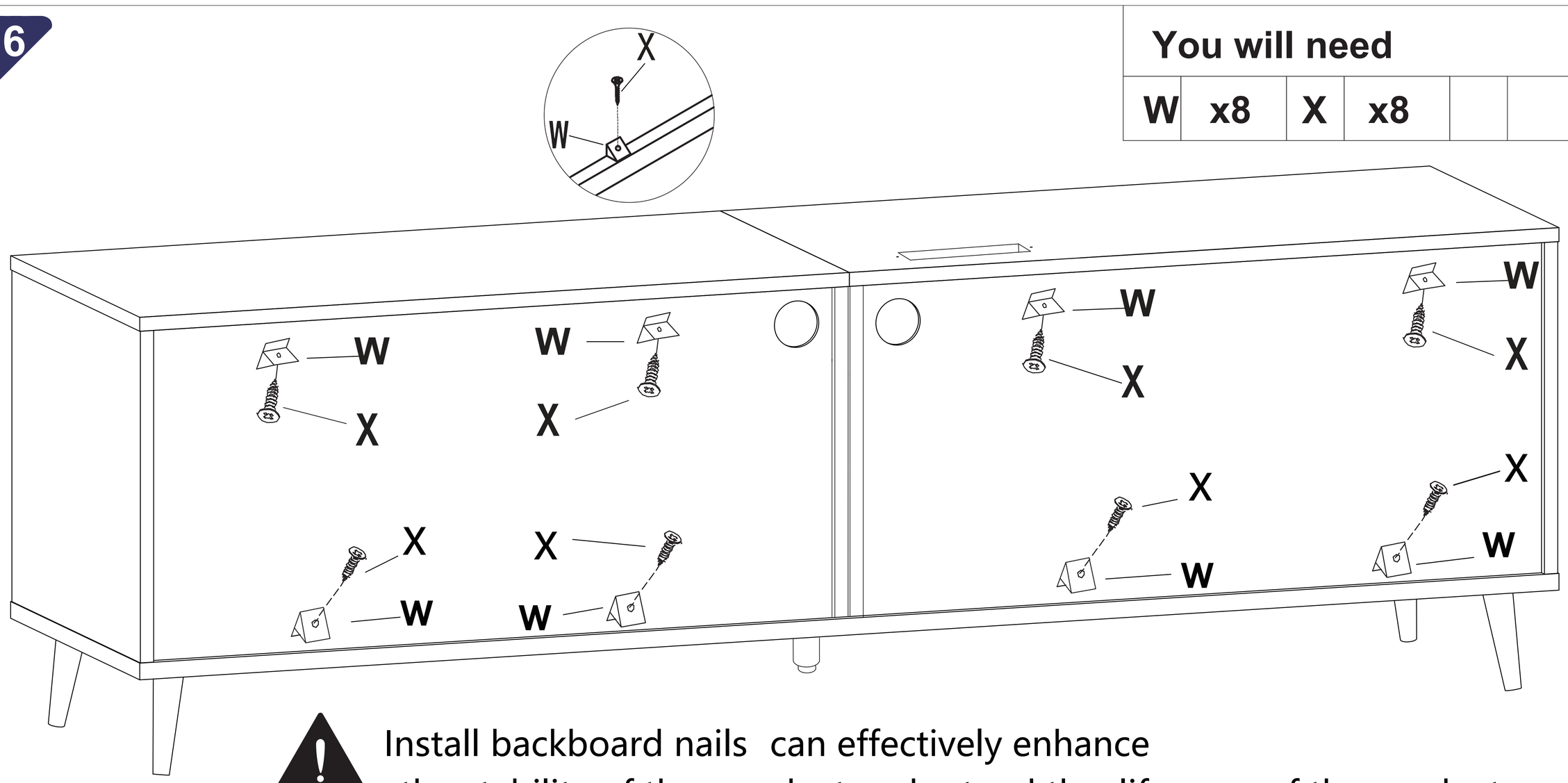

Install backboard nails can effectively enhance the stability of the product and extend the life span of the product.

17

You will need									
J	x2	K	x2	L	x4	P	x4	H	x4

As part J has an adjustable elliptical hole, you need to adjust the position of J before installing the screw L. After adjustment, part J will have enough suction withmagnetic part I, ensuring that the cabinet door closes properly during use.

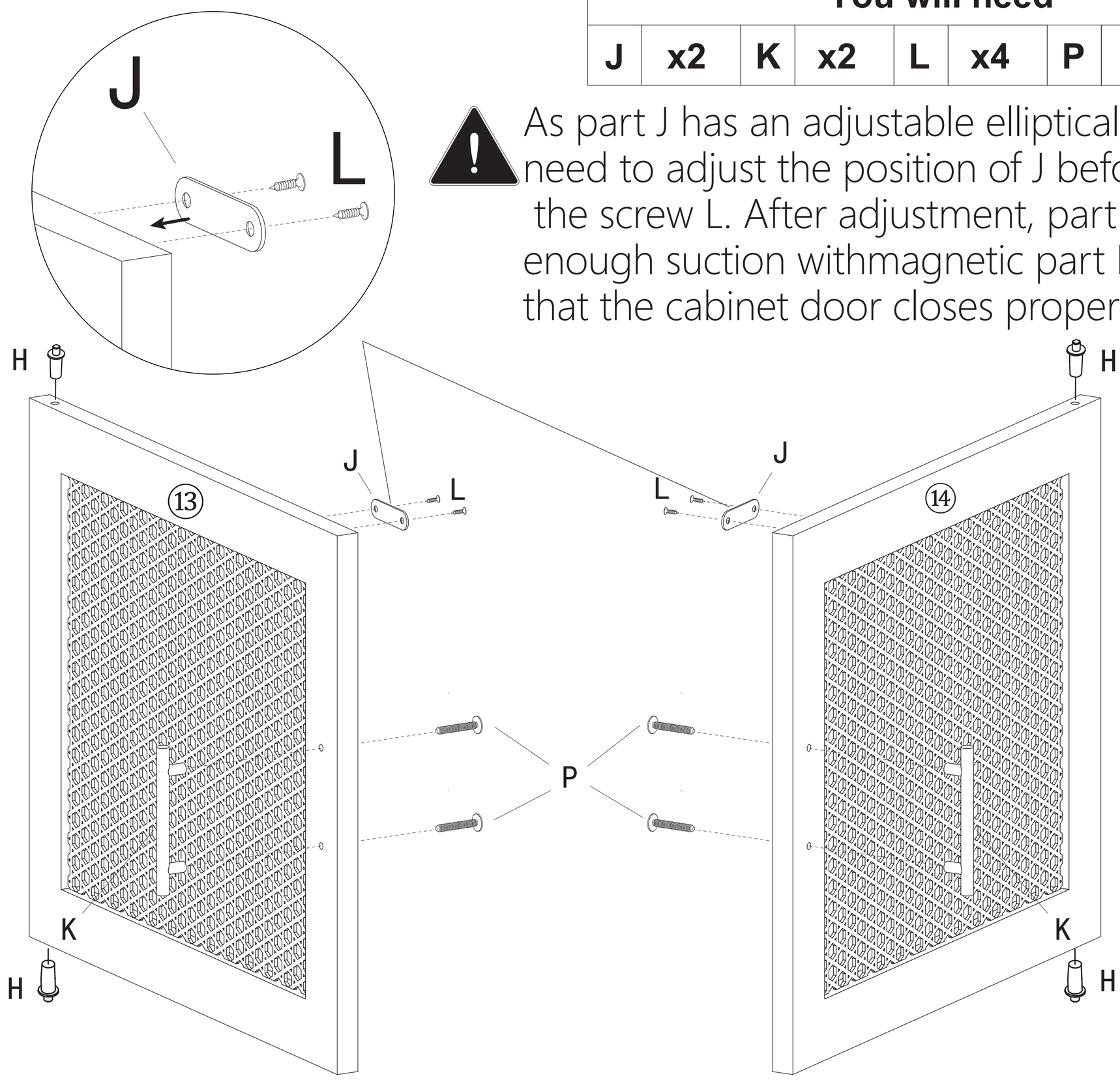

18

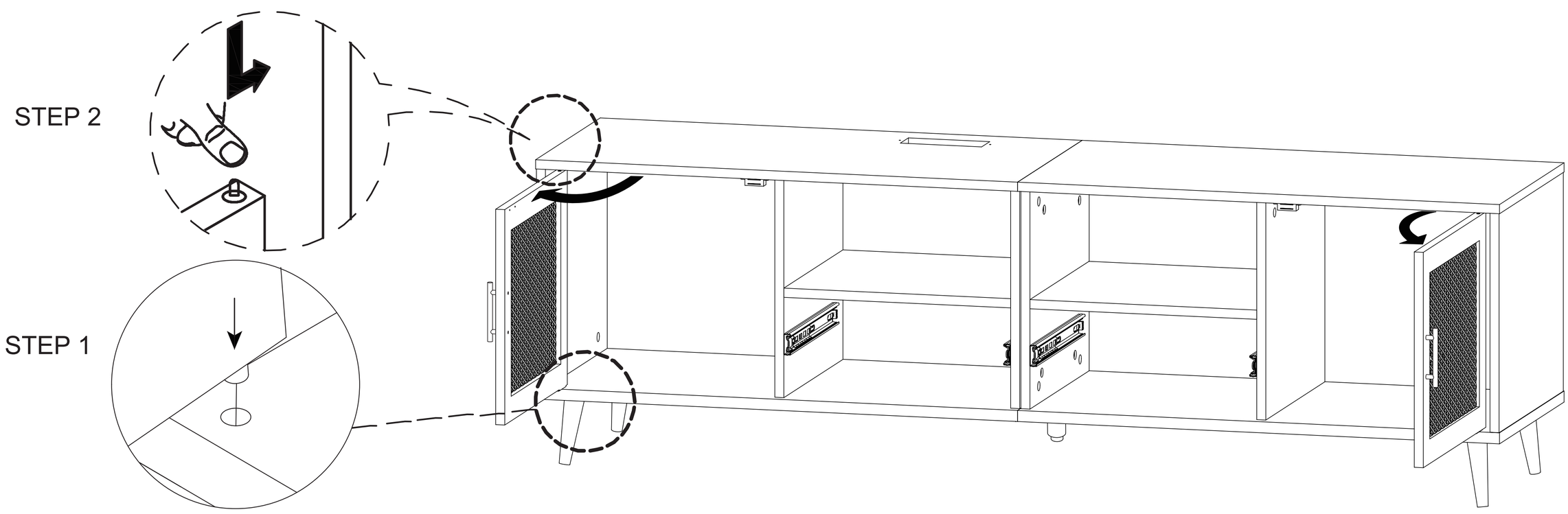

19

You will need							
K	x2	M	x8	P	x4		

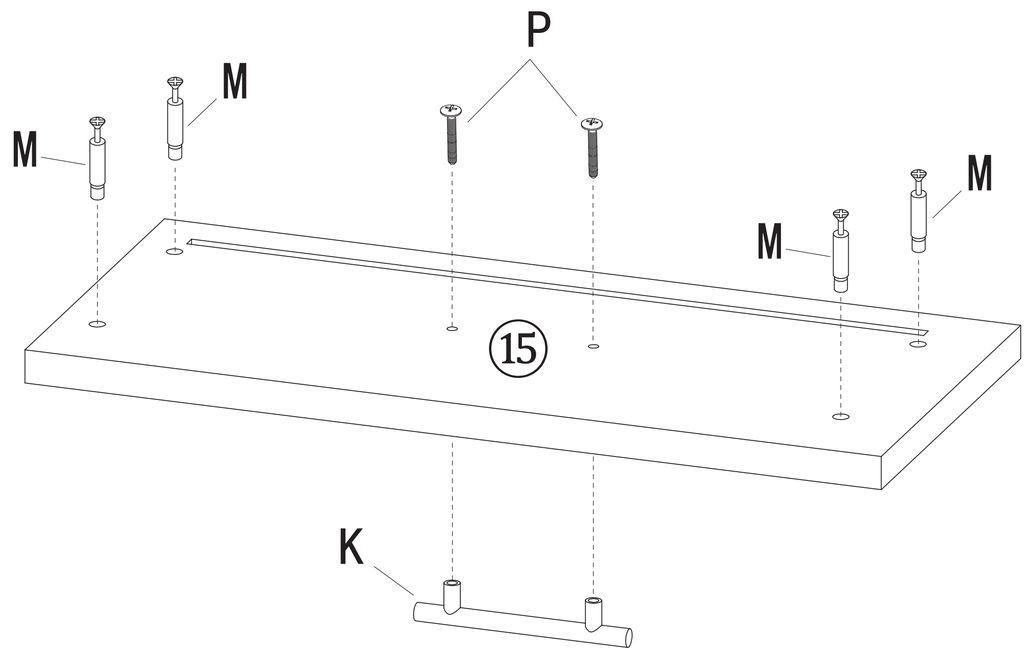

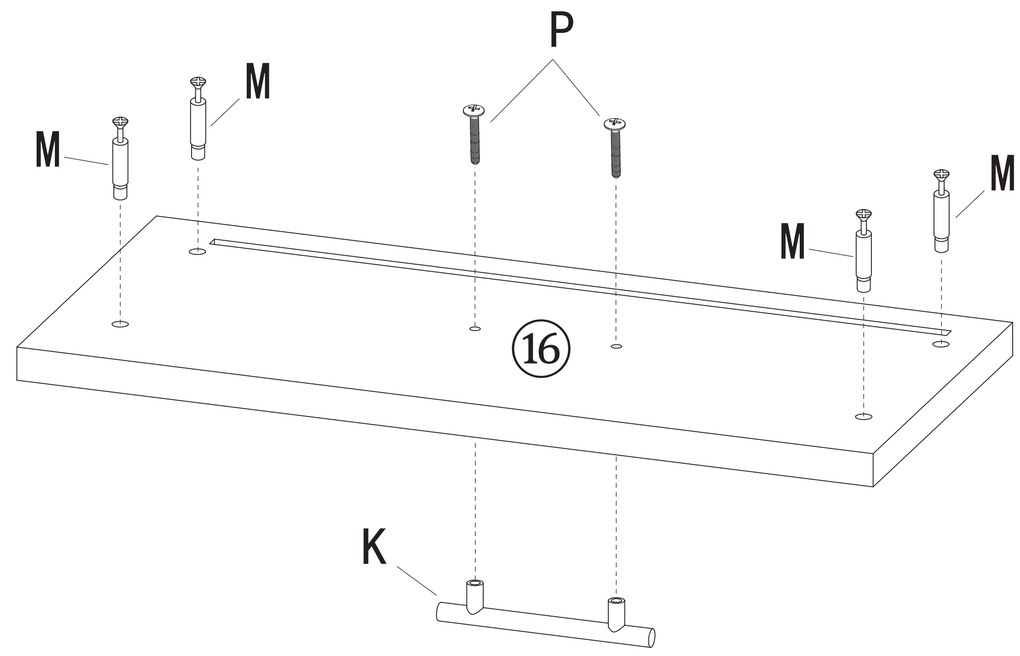

20

X2

You will need			
A2	x4	L	x8

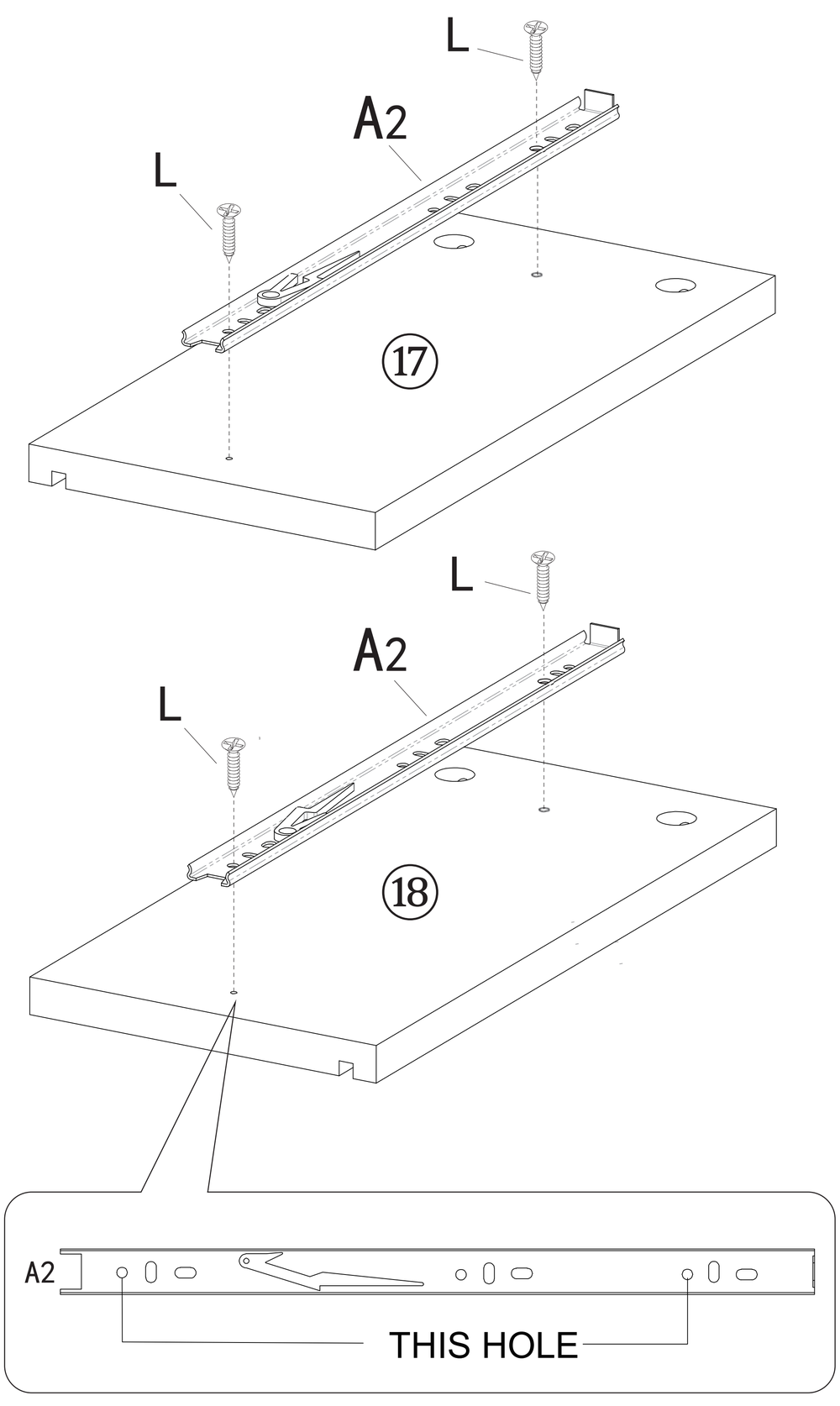

21

X2

You will need			
M	x8		

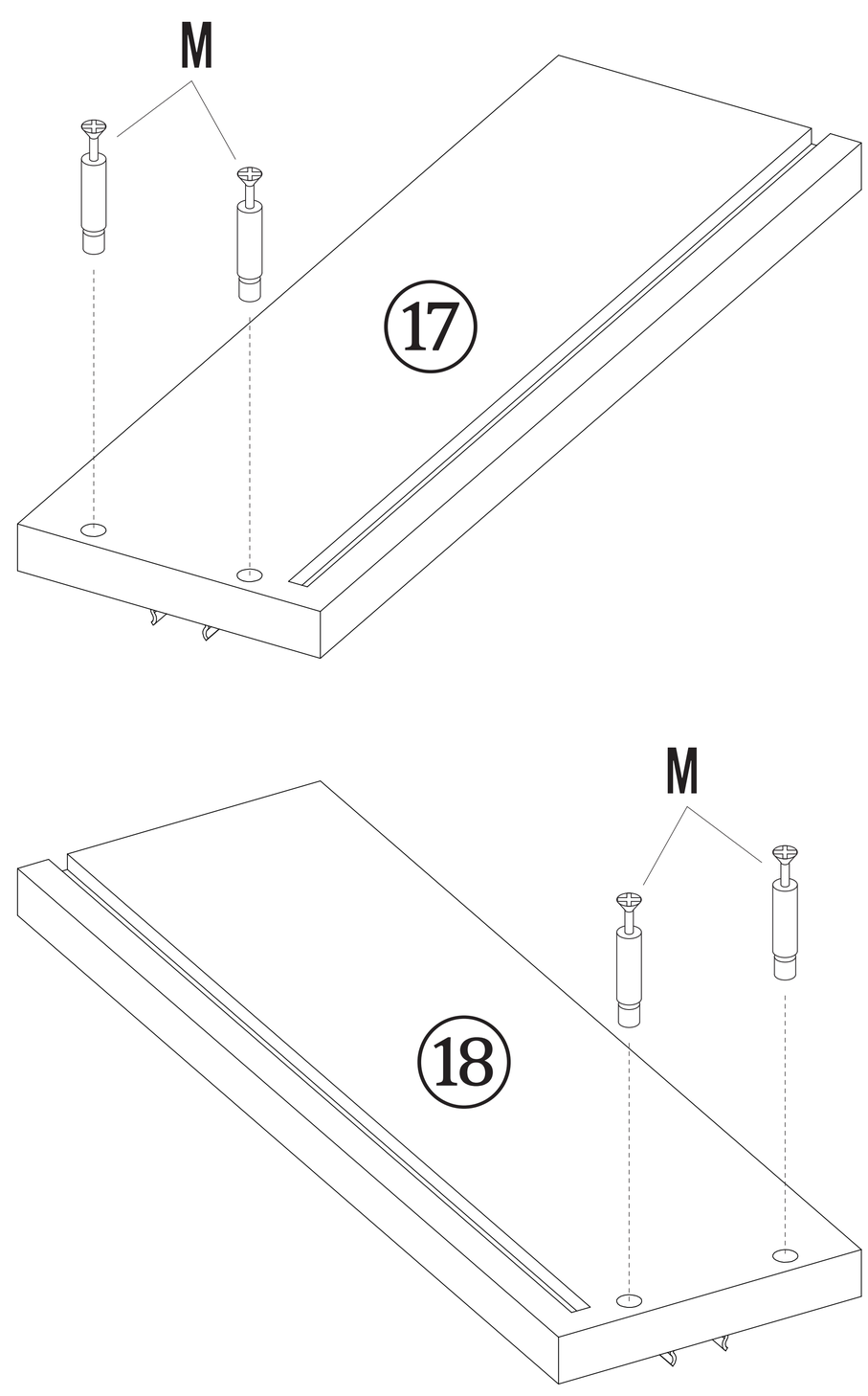

22

You will need			
O	x8	T	x8

X2

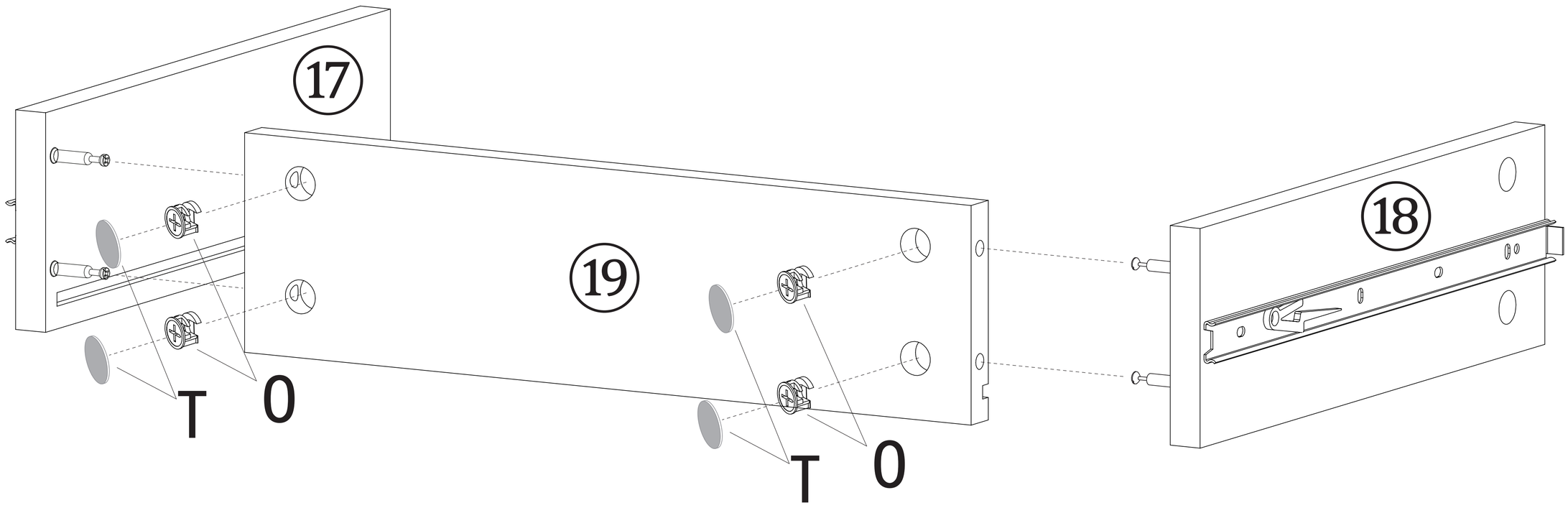

23

You will need			
O	x8	T	x8

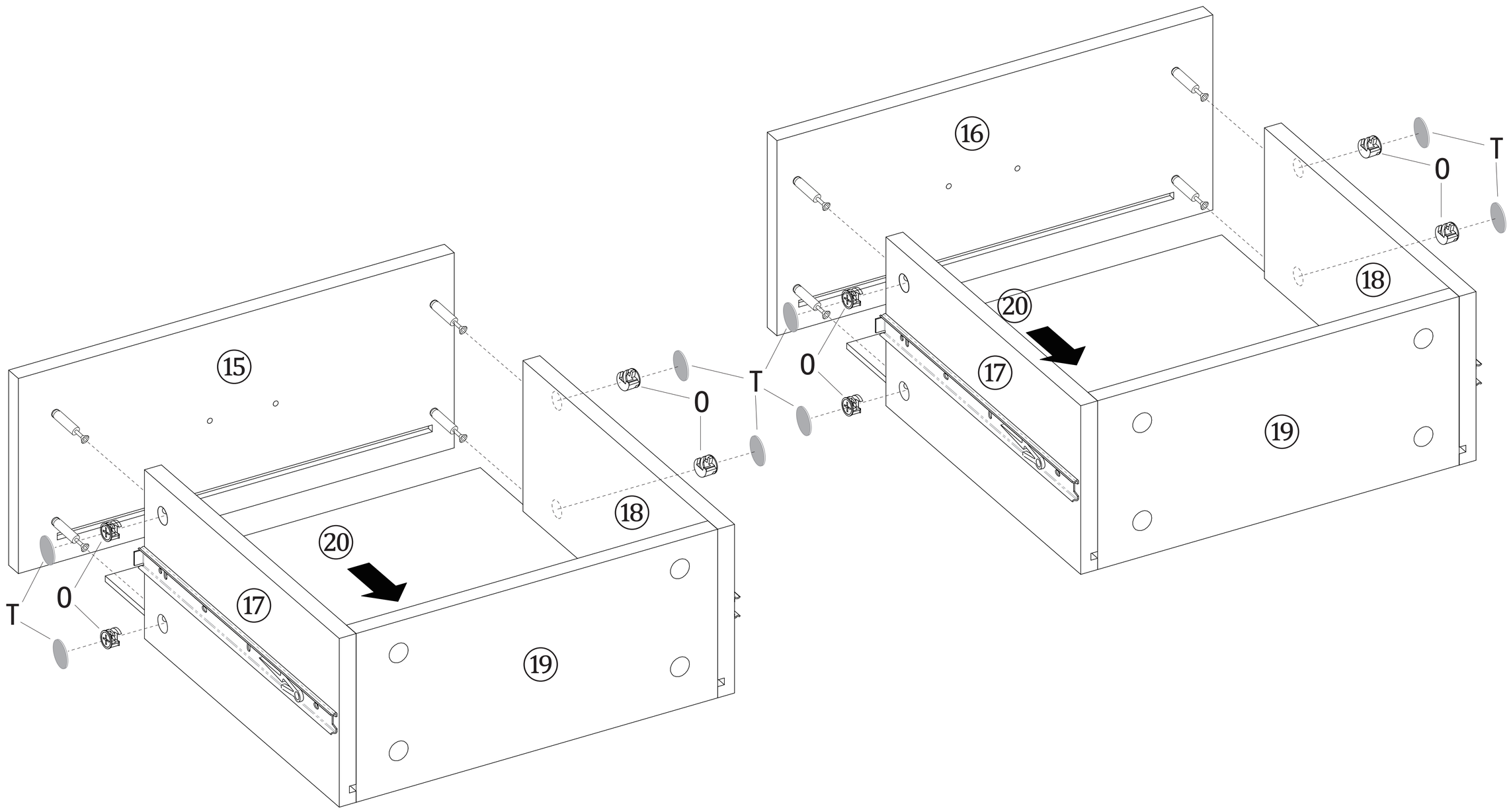

24

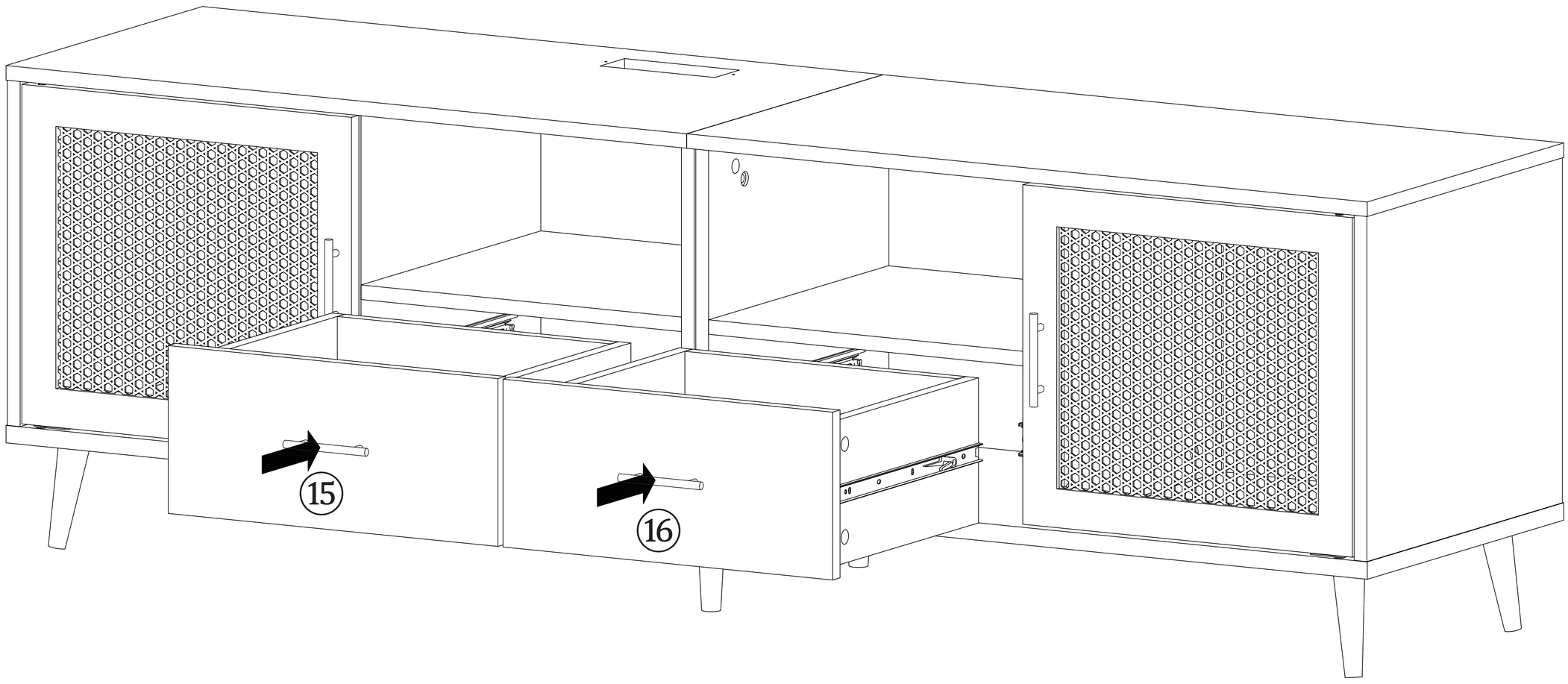

25

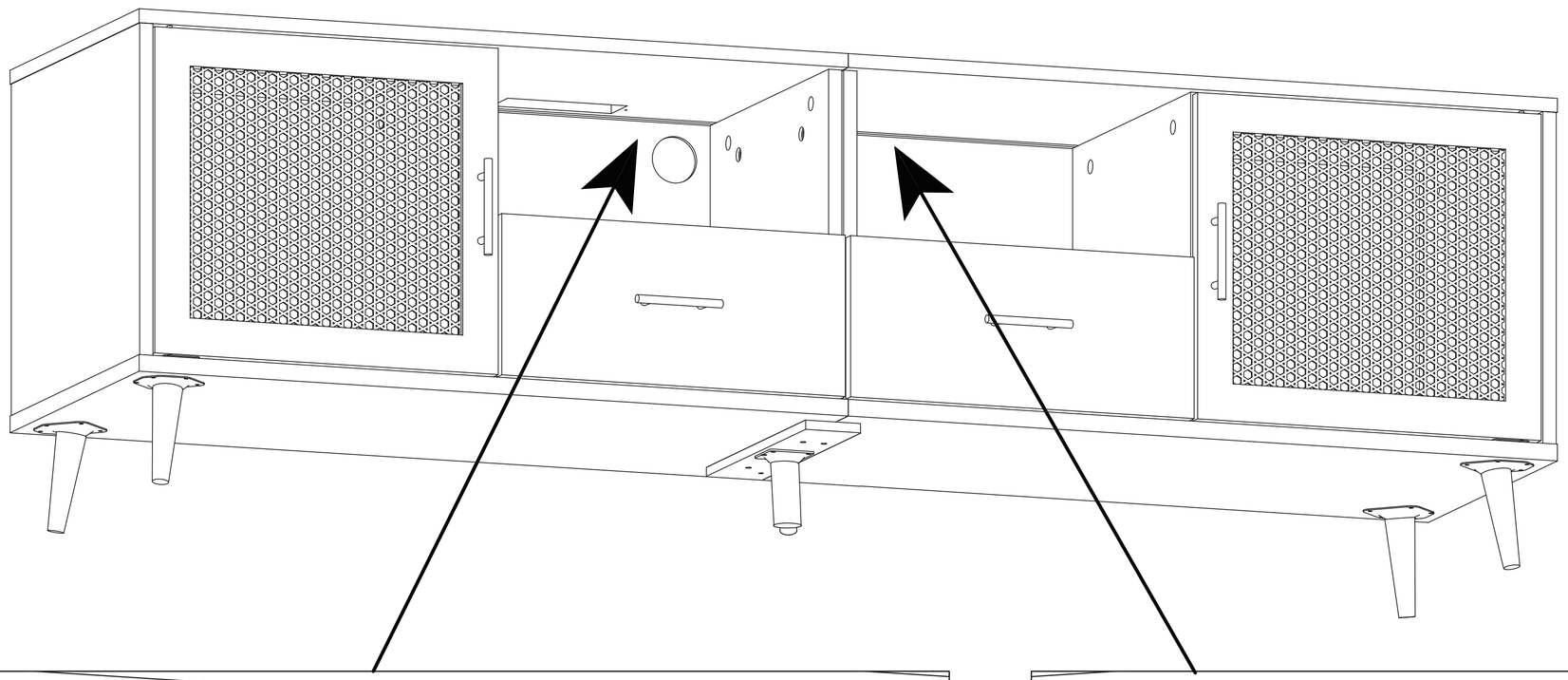

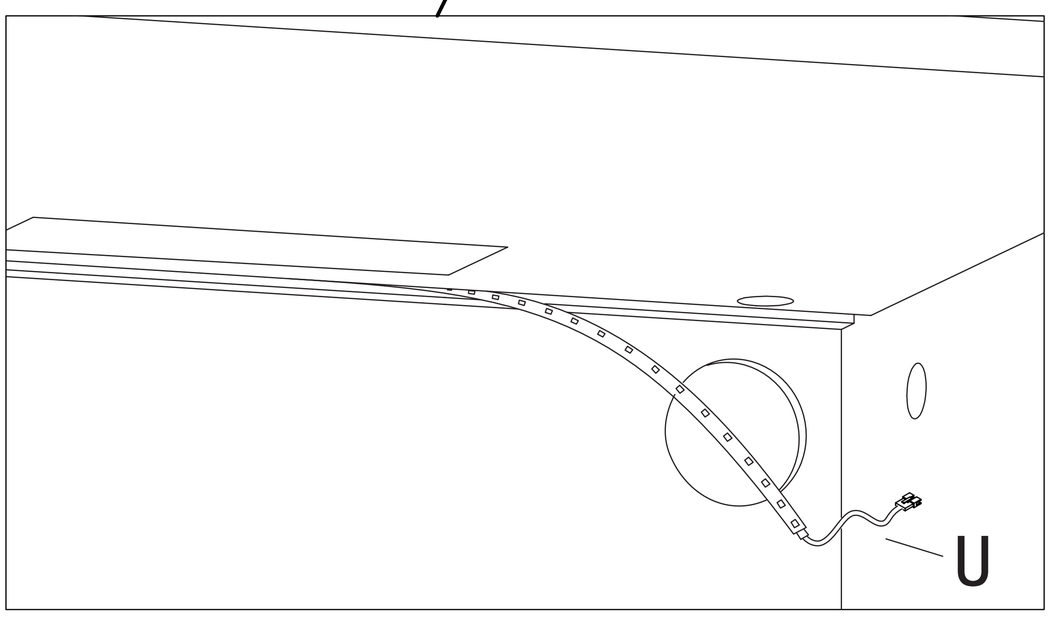

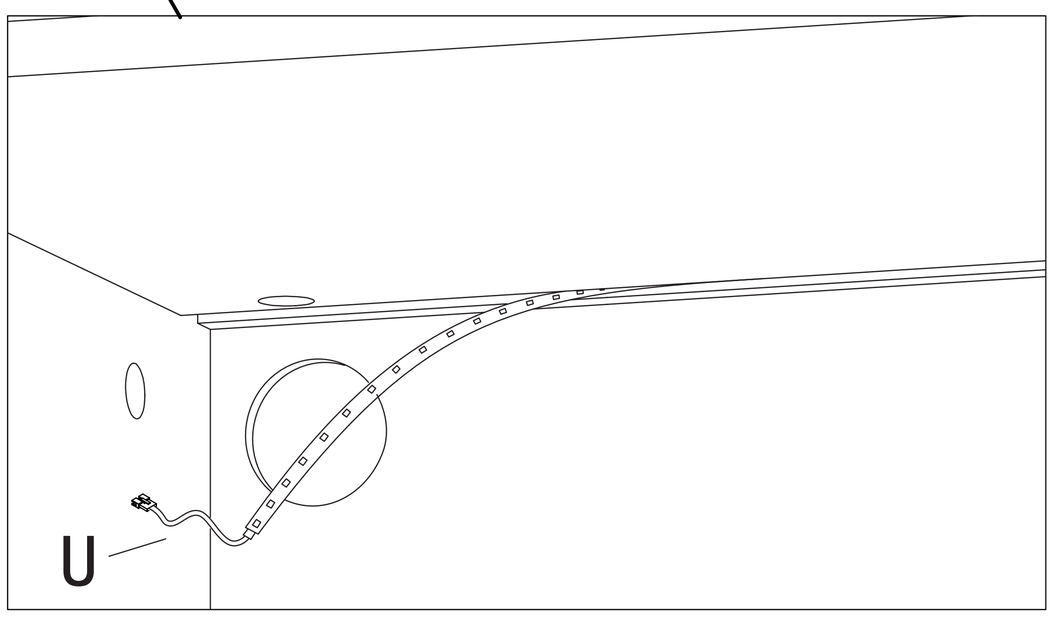

26

You will need			
L	x2	B	x1

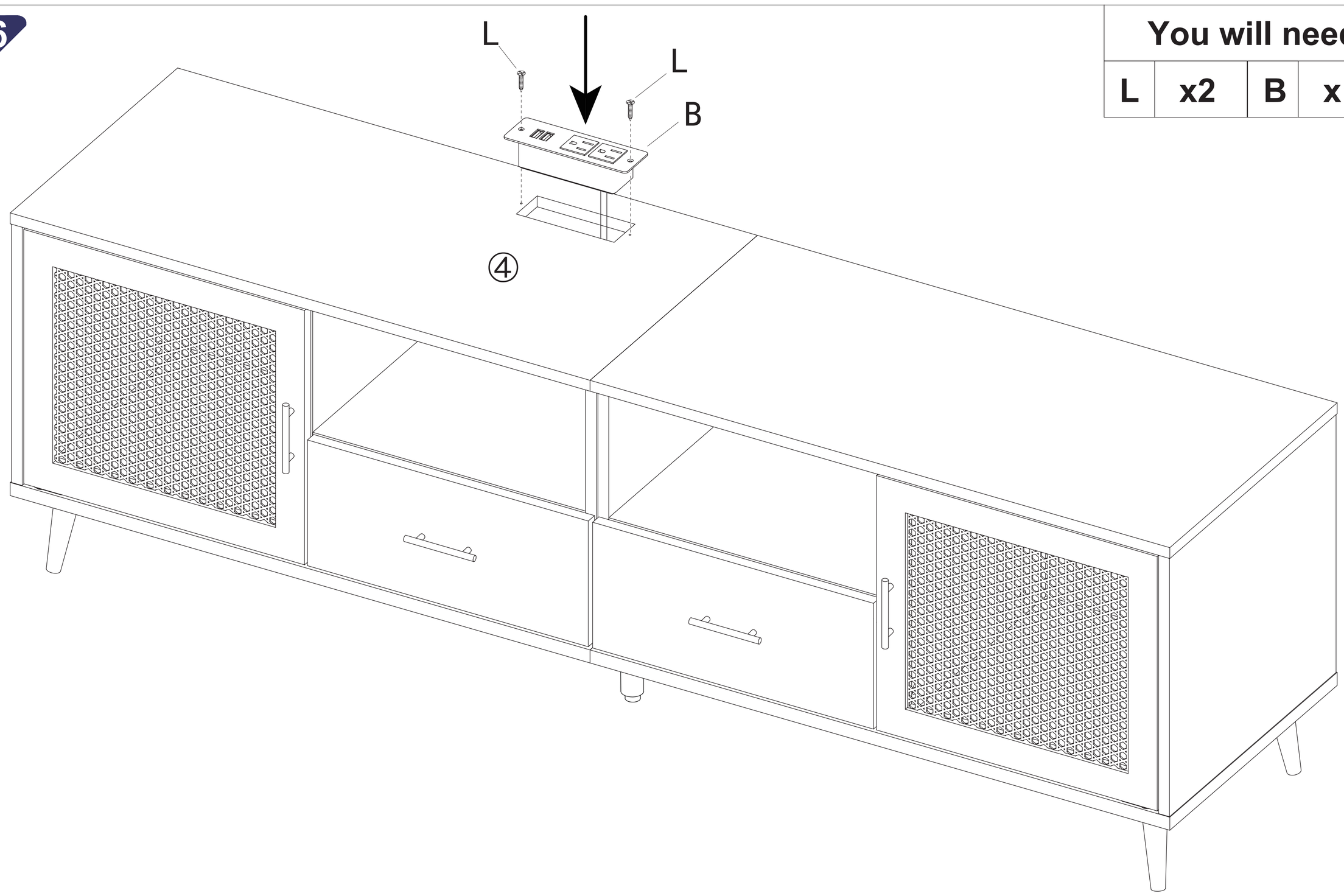

27

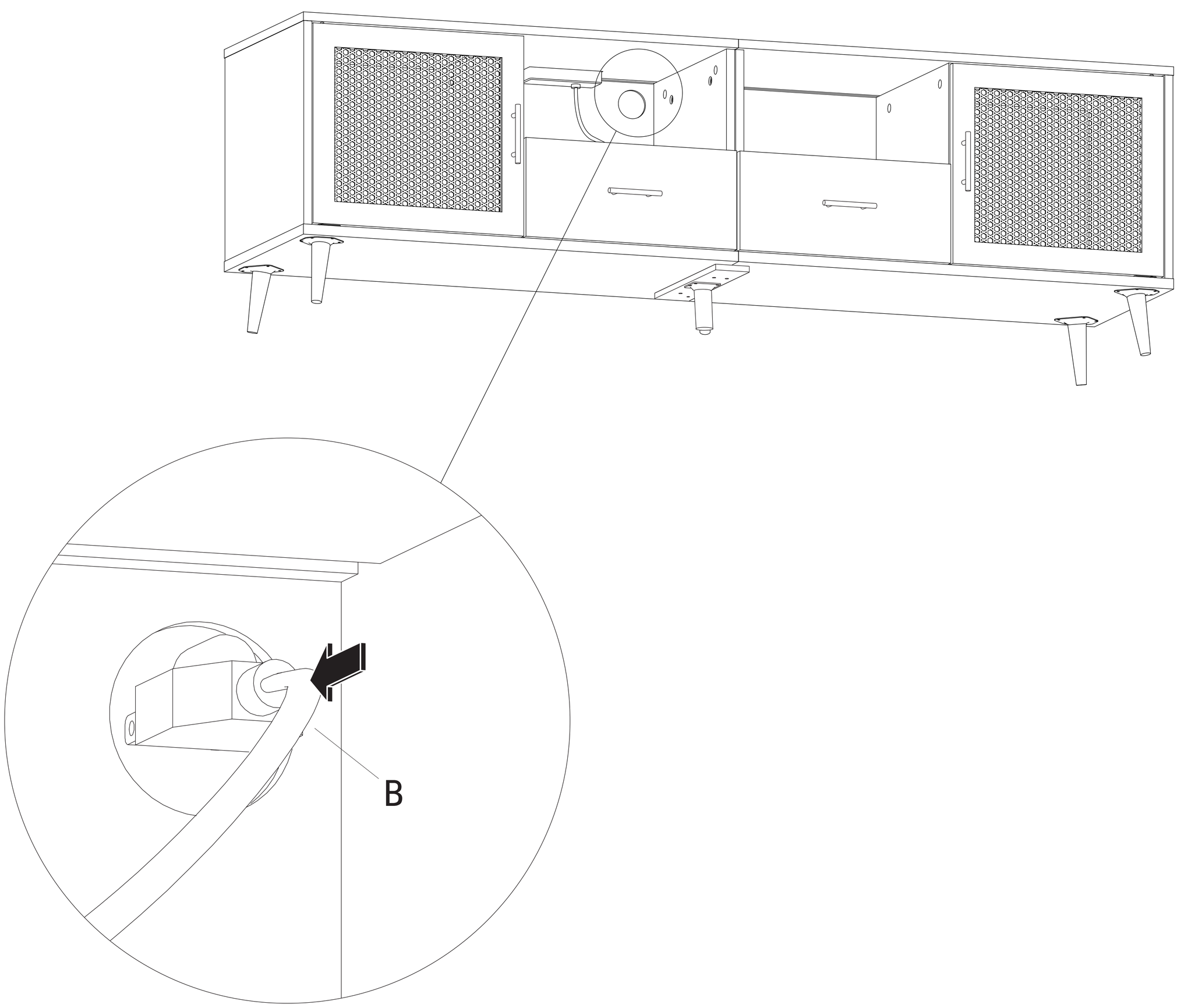

28

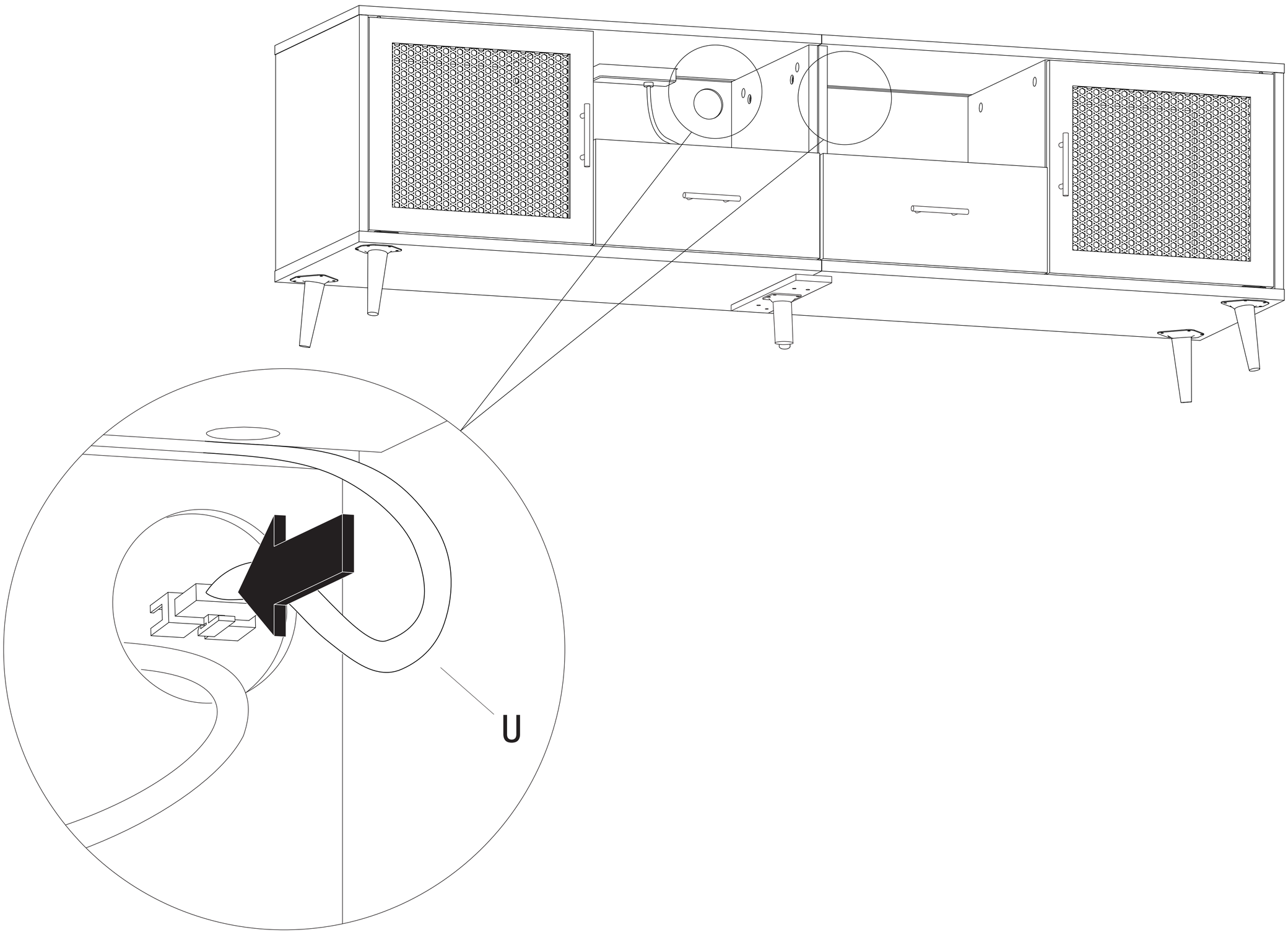

29

You will need							
V	x1						

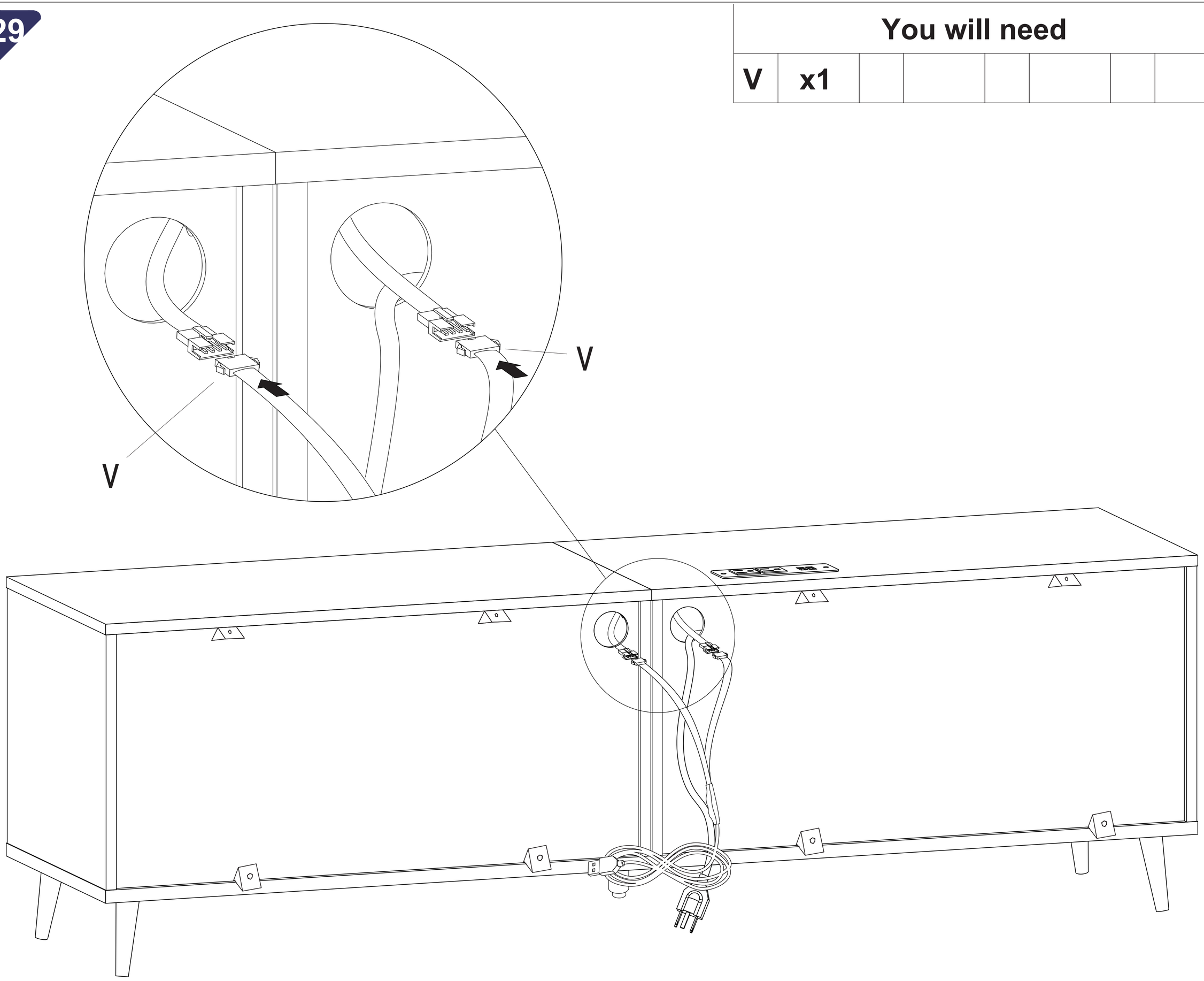

30

INSTALLATION COMPLETED

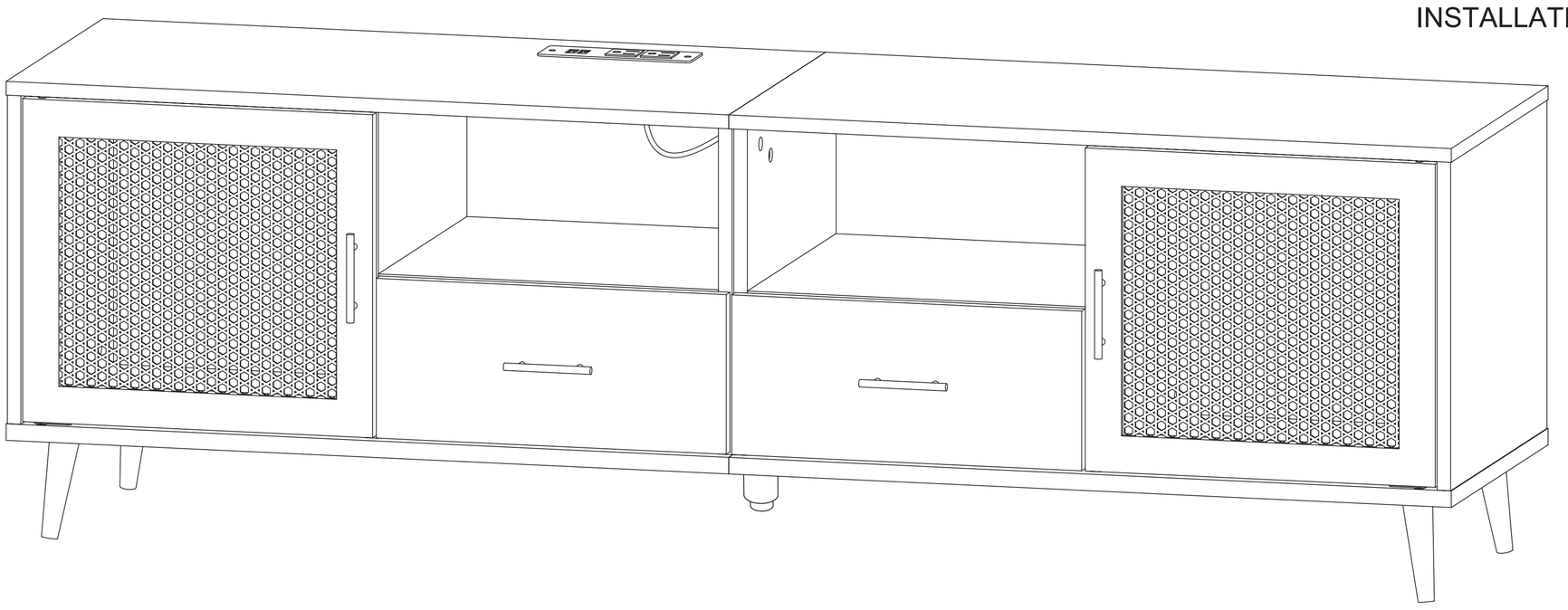

Follow our media account to get Discounts and More New Arrivals!

TikTok

janfly.us

YouTube

Model : JFLDSG2512/JFLDSG2513
Shandong Janfly Home Collection Co.,Ltd.
ADD: No. 66, Laotawan Village, Louzhuang Town,
Cao County, Heze City, Shandong Province, China

Customer Service Emails
US@JANFLY.COM
EU@JANFLY.COM

Made in China

Model : JFLDSG2512/JFLDSG2513
Shandong Janfly Home Collection Co.,Ltd.
ADD: No. 66, Laotawan Village, Louzhuang Town,
Cao County, Heze City, Shandong Province,
China

Customer Service Emails
US@JANFLY.COM
EU@JANFLY.COM

Made in China