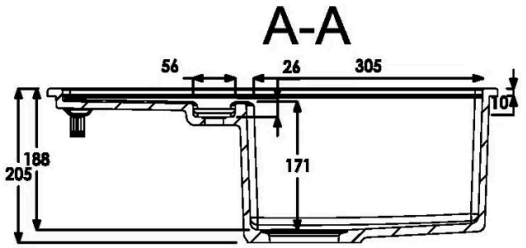
A-A
56
26
305
10
188
205
171

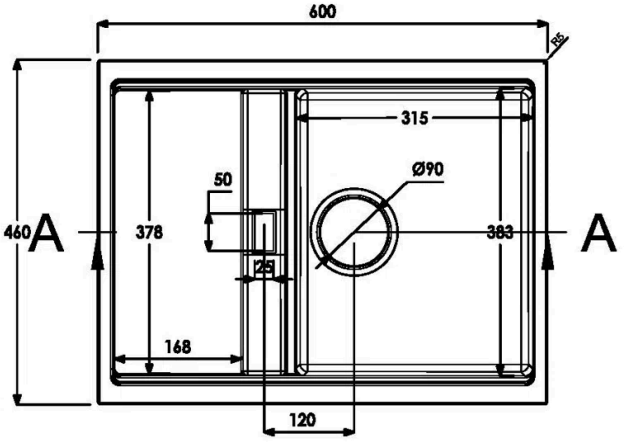
600
R5
315
Ø90
50
460
A
378
383
A
25
168
120

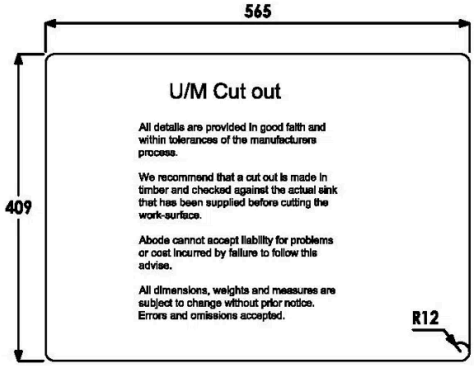
565
U/M Cut out
All details are provided in good faith and within tolerances of the manufacturers process.
We recommend that a cut out is made in timber and checked against the actual sink that has been supplied before cutting the work-surface.
Abode cannot accept liability for problems or cost incurred by failure to follow this advise.
All dimensions, weights and measures are subject to change without prior notice. Errors and omissions accepted.
409
R12

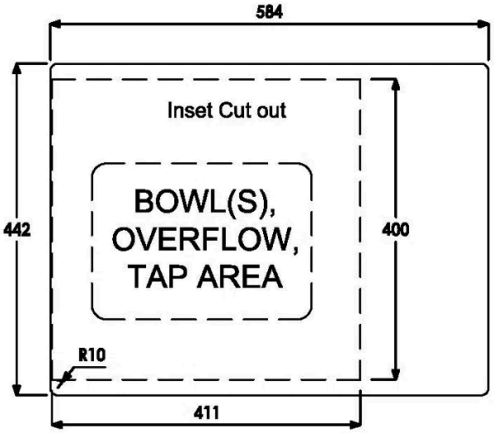
584
Inset Cut out
BOWL(S), OVERFLOW, TAP AREA
442
400
R10
411