Thanks for purchasing from us. If you need tutorial videos, FAQs and more help, Please scan the QR code to get your after-sales service.

Customer support

Email: **service2025514@gmail.com**

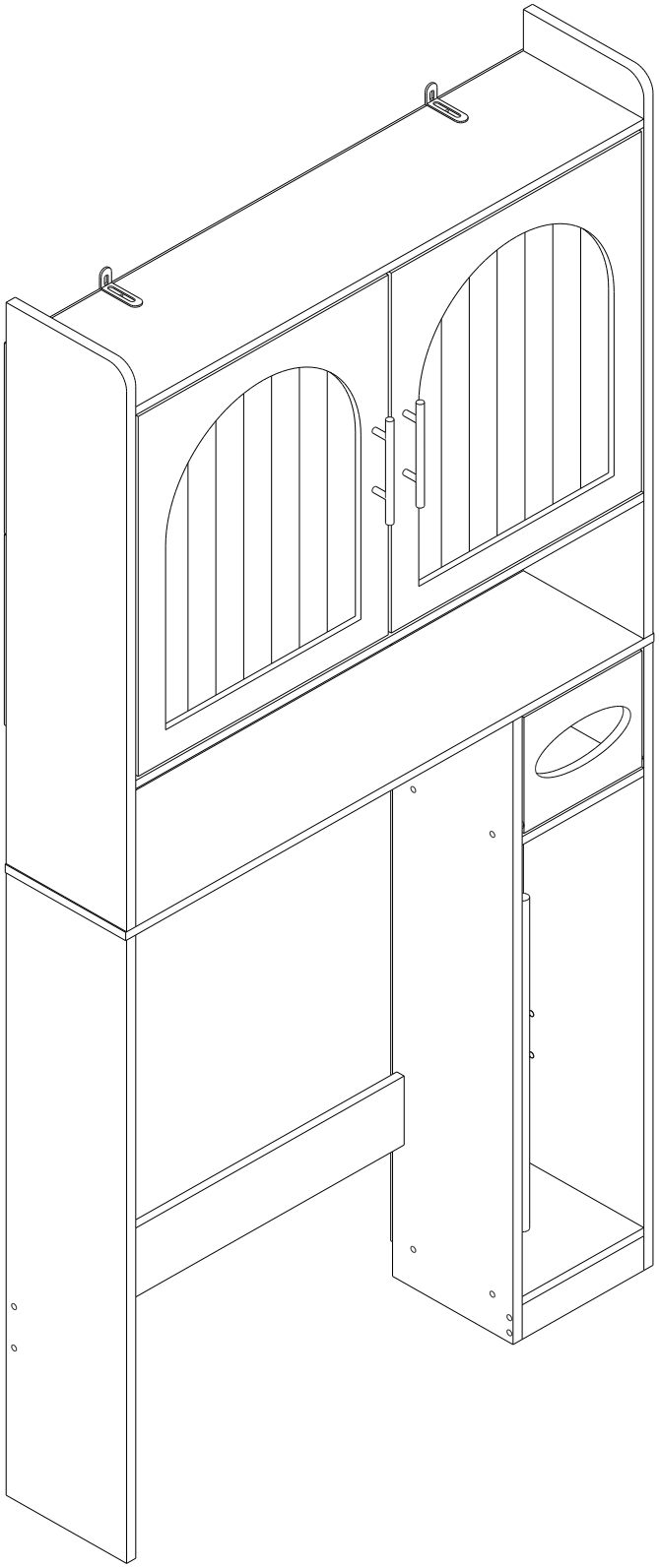

Part List

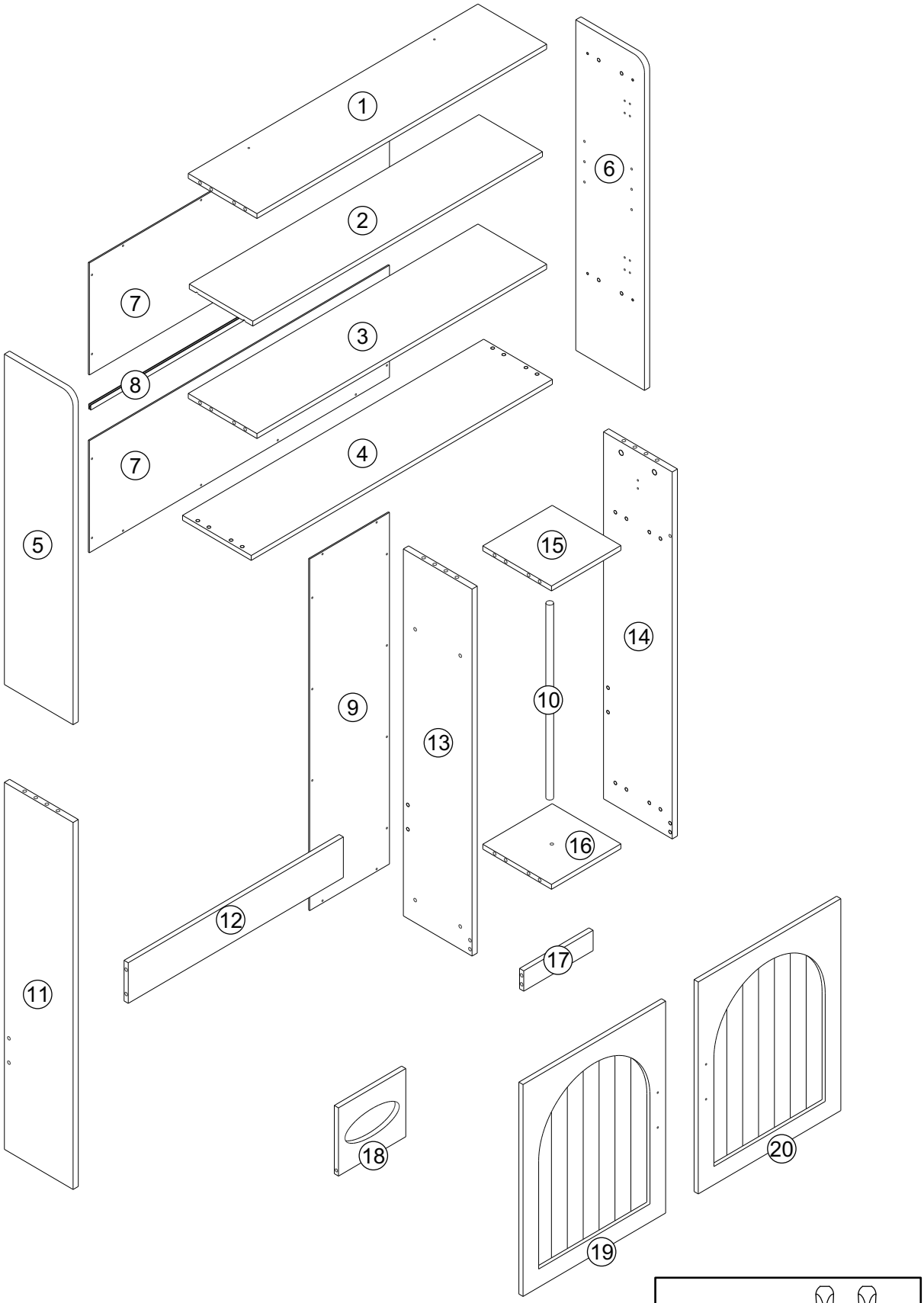

Part List

① ×1	② ×1	③ ×1	④ ×1
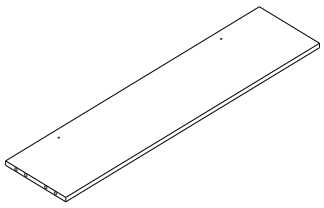	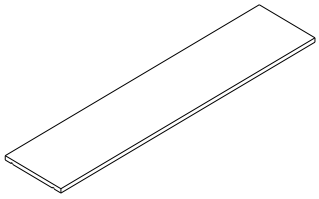	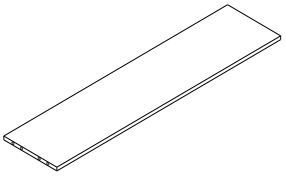	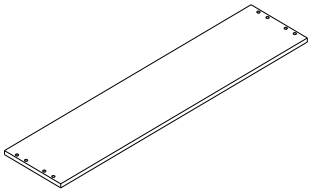
⑤ ×1	⑥ ×1	⑦ ×2	⑧ ×1
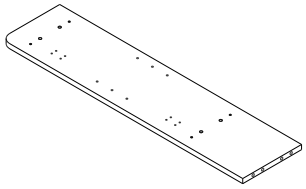	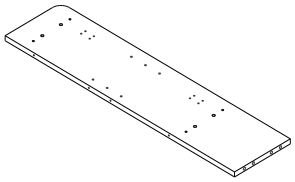	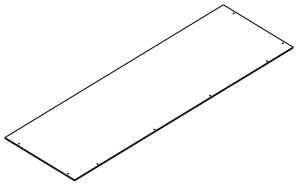	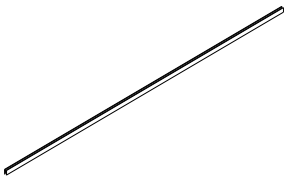
⑨ ×1	⑩ ×1	⑪ ×1	⑫ ×1
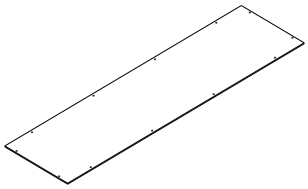	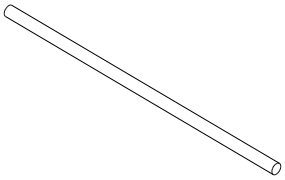	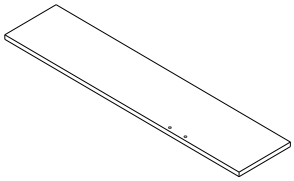	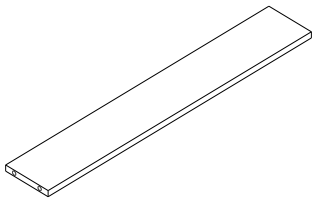
⑬ ×1	⑭ ×1	⑮ ×1	⑯ ×1
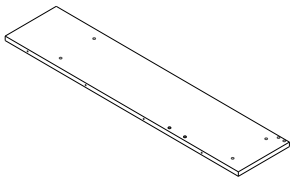	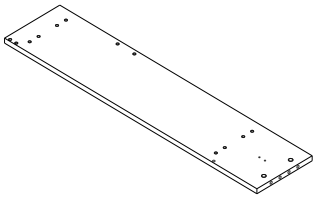	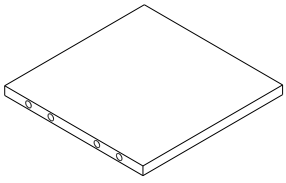	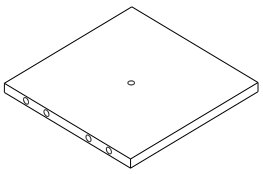
⑰ ×1	⑱ ×1	⑲ ×1	⑳ ×1
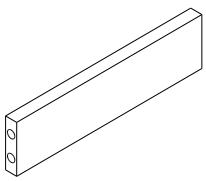	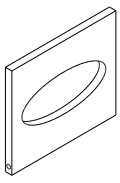	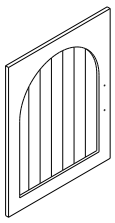	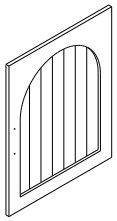

Hardware List

A ×14	B ×14	C ×26	D ×24	E ×4
		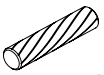 M6×30	 M4x12	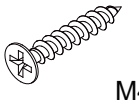 M4×35
F ×28	G ×4	H ×1	I ×2	J ×1
 M3×12	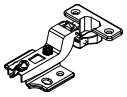	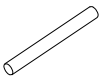		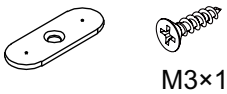 M3×12
K ×1	L ×2	M ×2	N ×2	O ×16
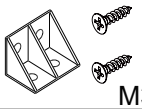 M3.5x12	 M4×12	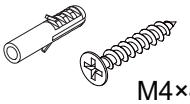 M4×40		 M7×50
P ×4	Q ×1	R ×4	S ×2	T ×1
 M4×16	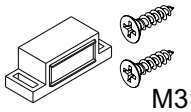 M3×14	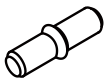	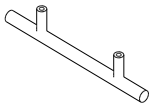	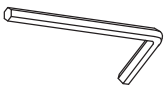
U ×1	V ×18	W ×4		
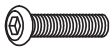 M6×25		 M3.5x12		

Tools required

Phillips Screwdriver

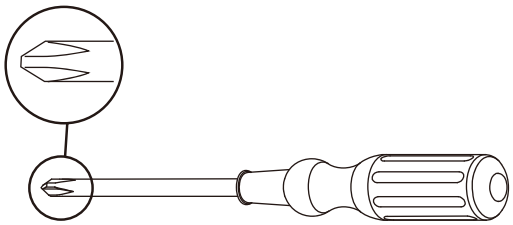

Straight Screwdriver

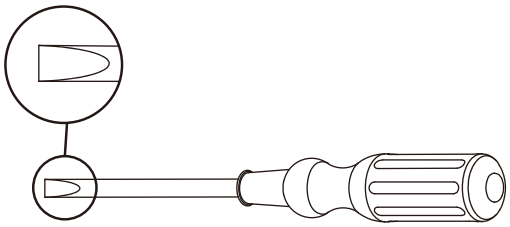

Power Tool NOT Recomemended

To ensure proper assembly we have included the following guides:

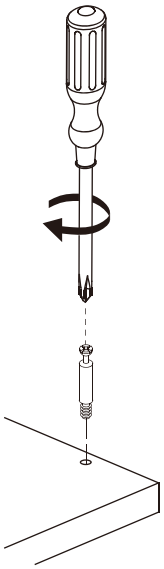

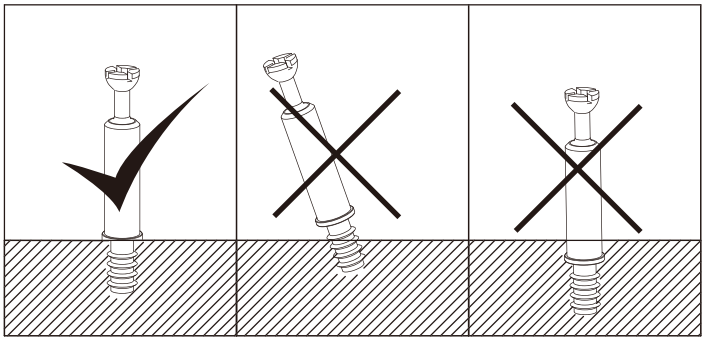

Insert threads of Locking Bolts completely，and stop once threads are no longer visible.

Do NOT overturn.

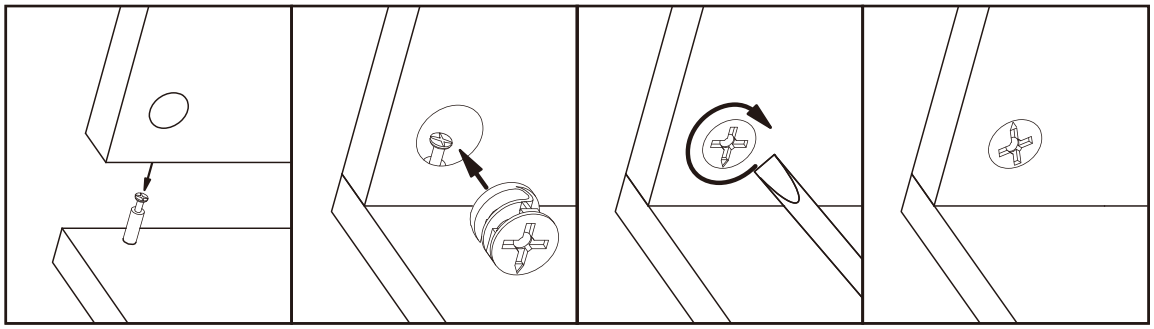

Reference this guide when assembling all Cam Locks.

Do NOT overturn.

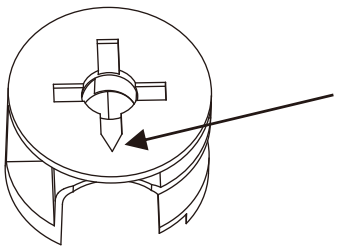

Notice:"pointer arrow"on cam face the Bolt when inserted the cam.

Step 1

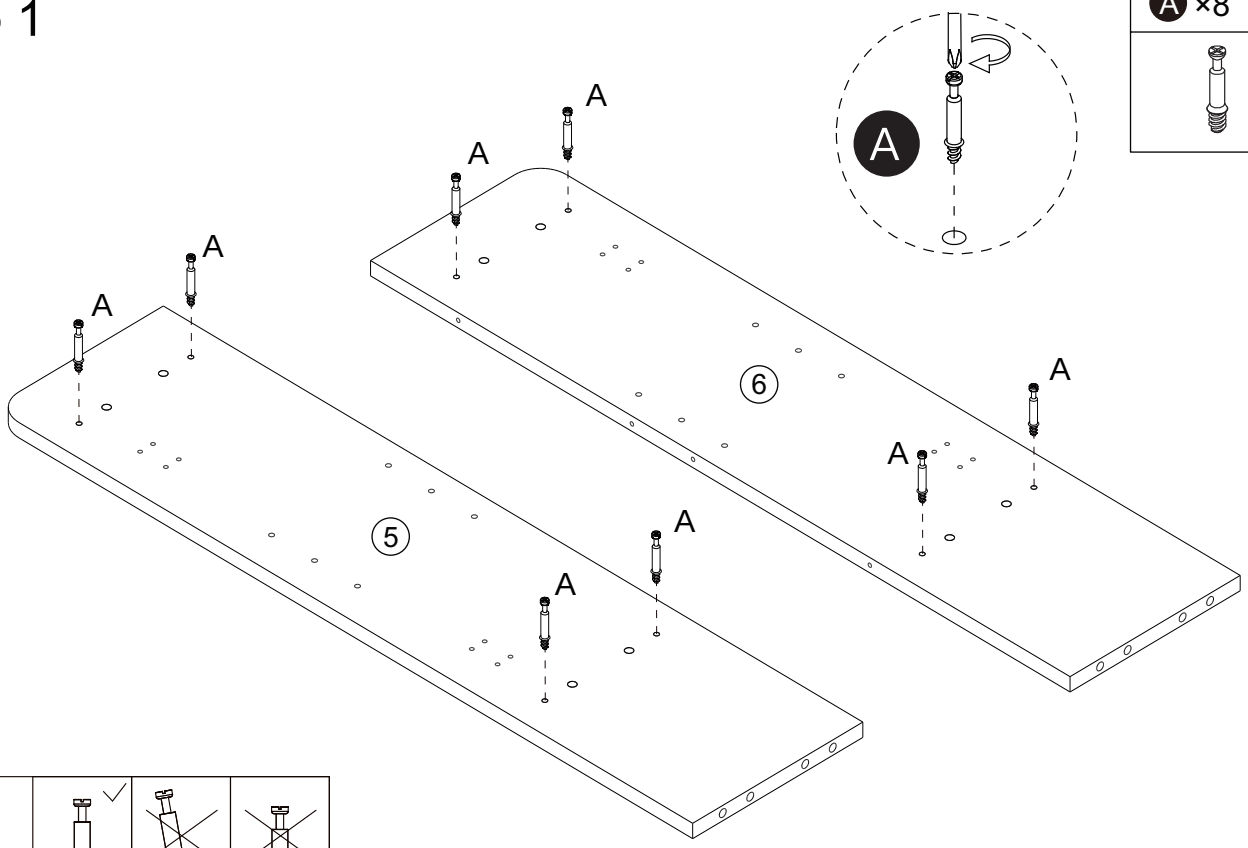

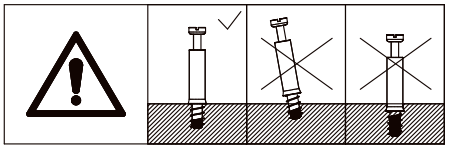

Step 2

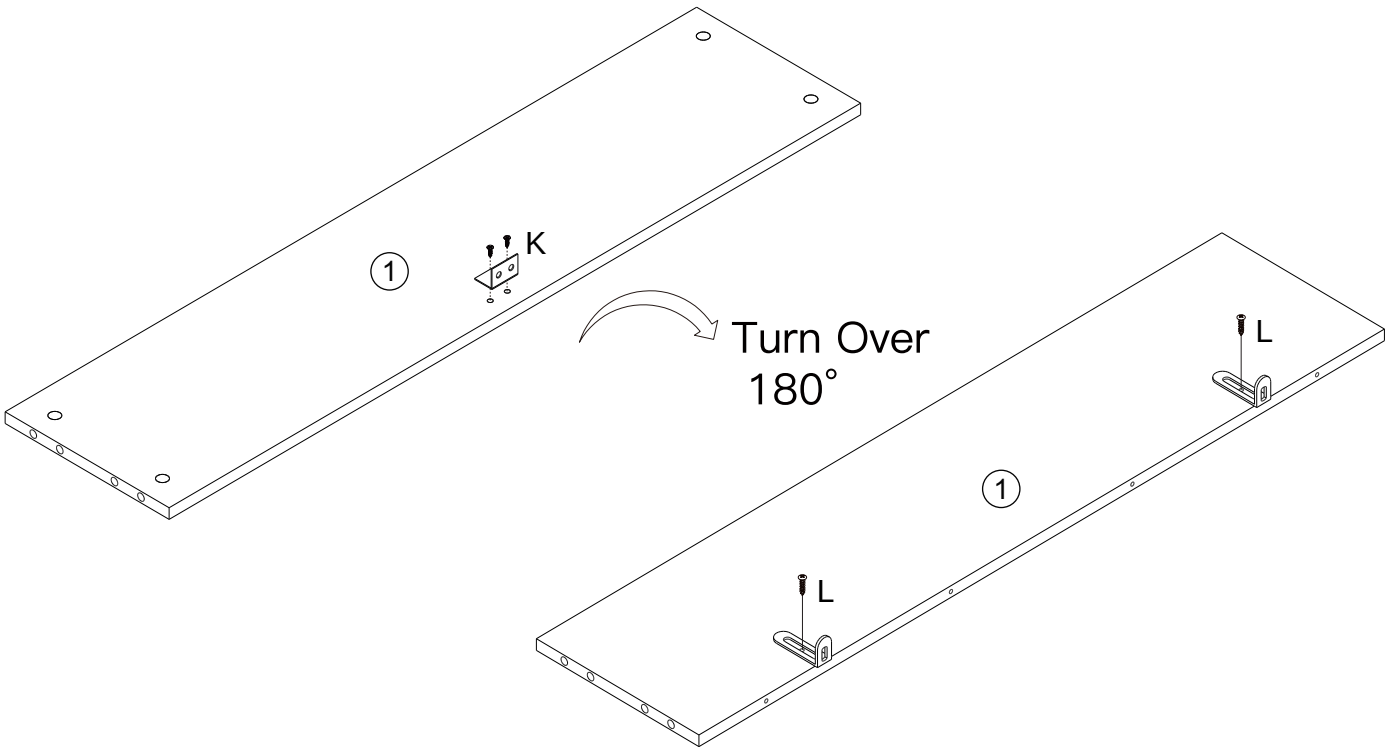

Step 3

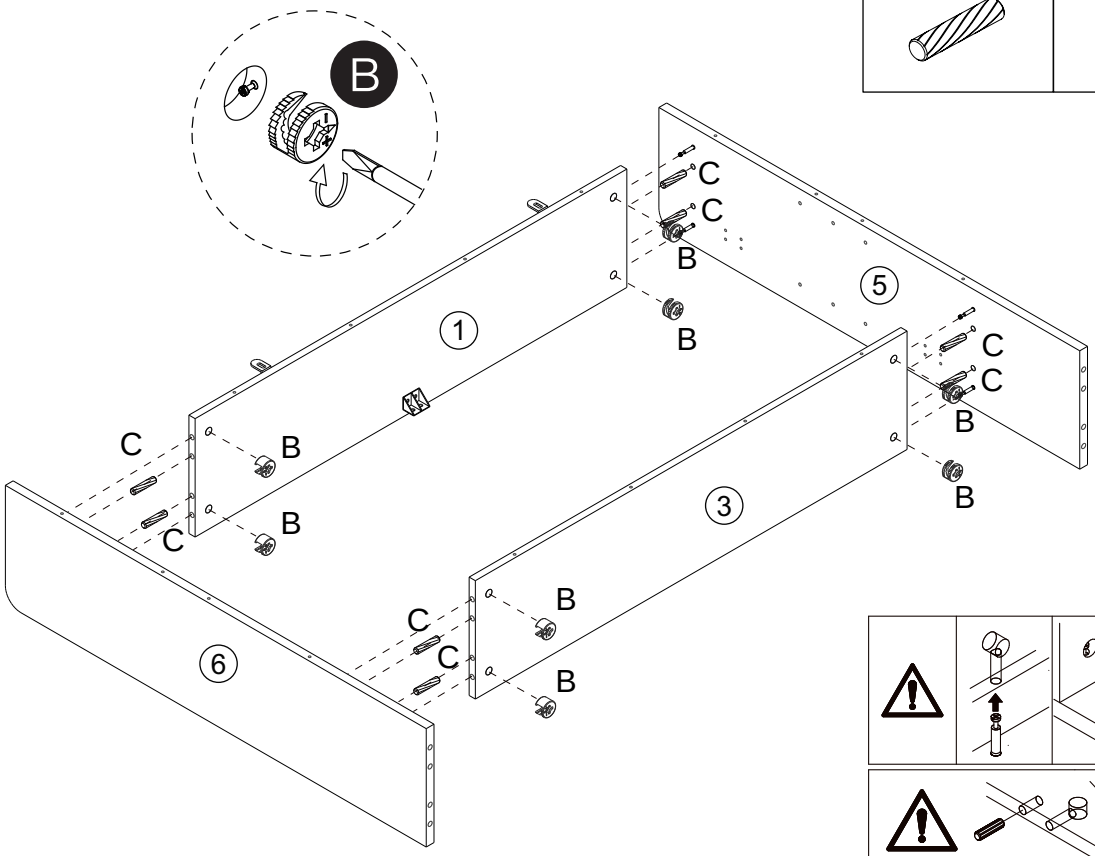

Step 4

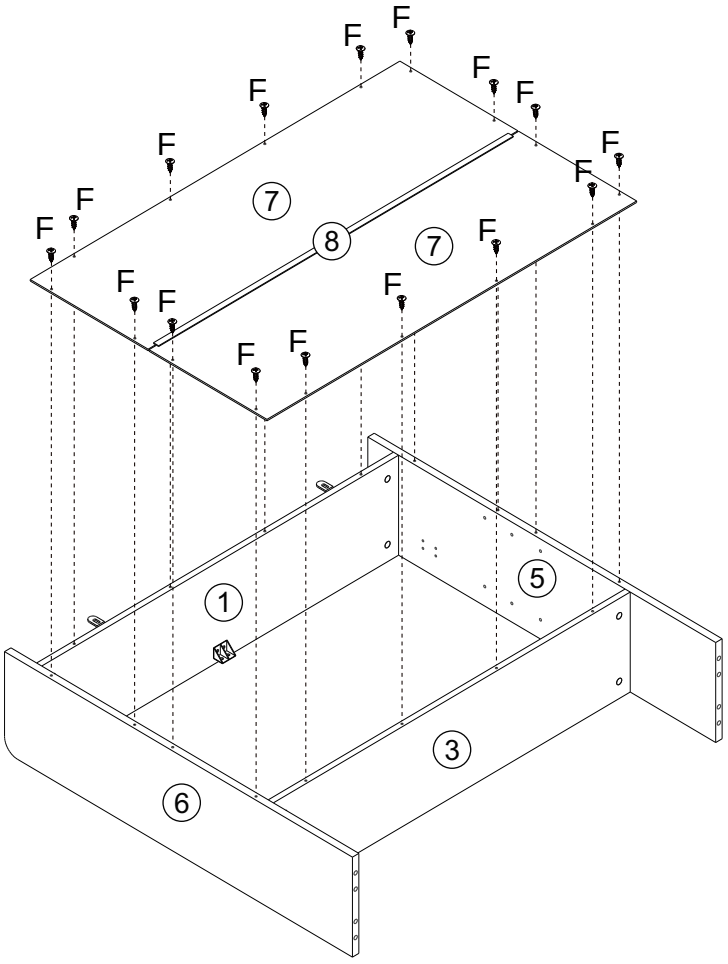

Step 5

Q ×1	A ×6
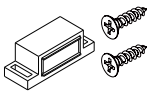	

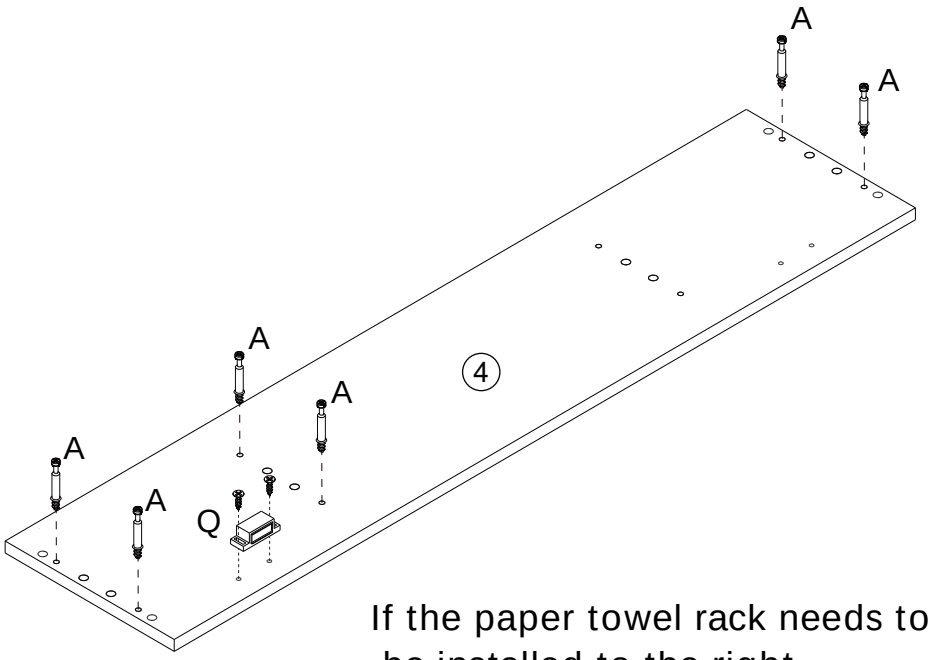

If the paper towel rack needs to be installed to the right

Please refer to Page 9 to 16

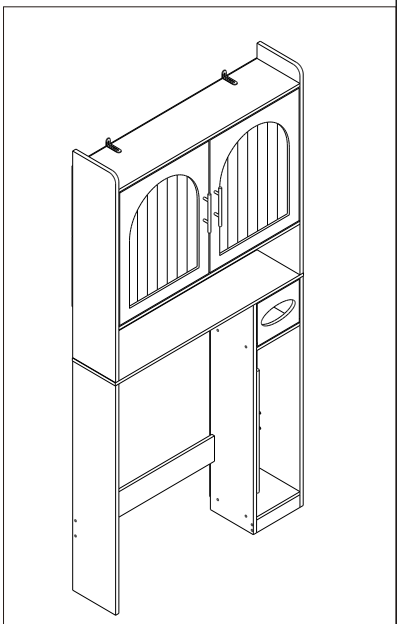

Step 6

Q ×1	A ×6
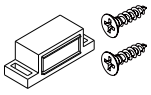	

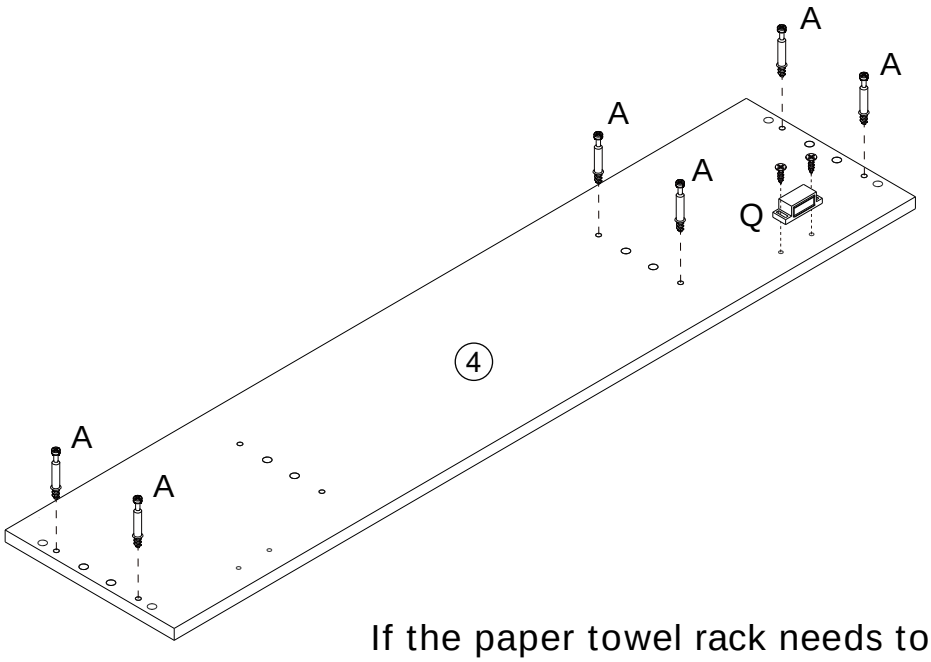

If the paper towel rack needs to be installed to the left

Please refer to Page 17 to 24

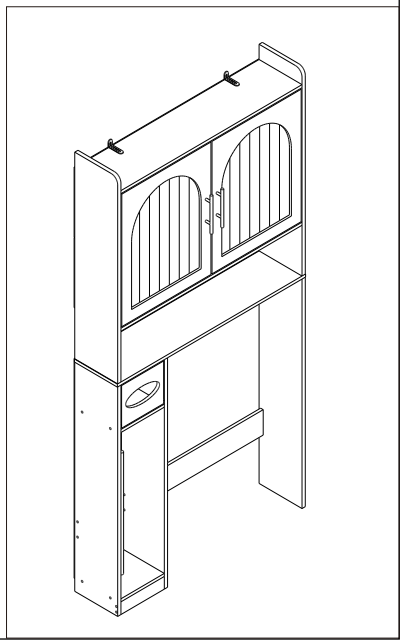

Step 7

C ×4	E ×4
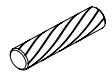	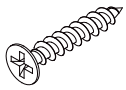

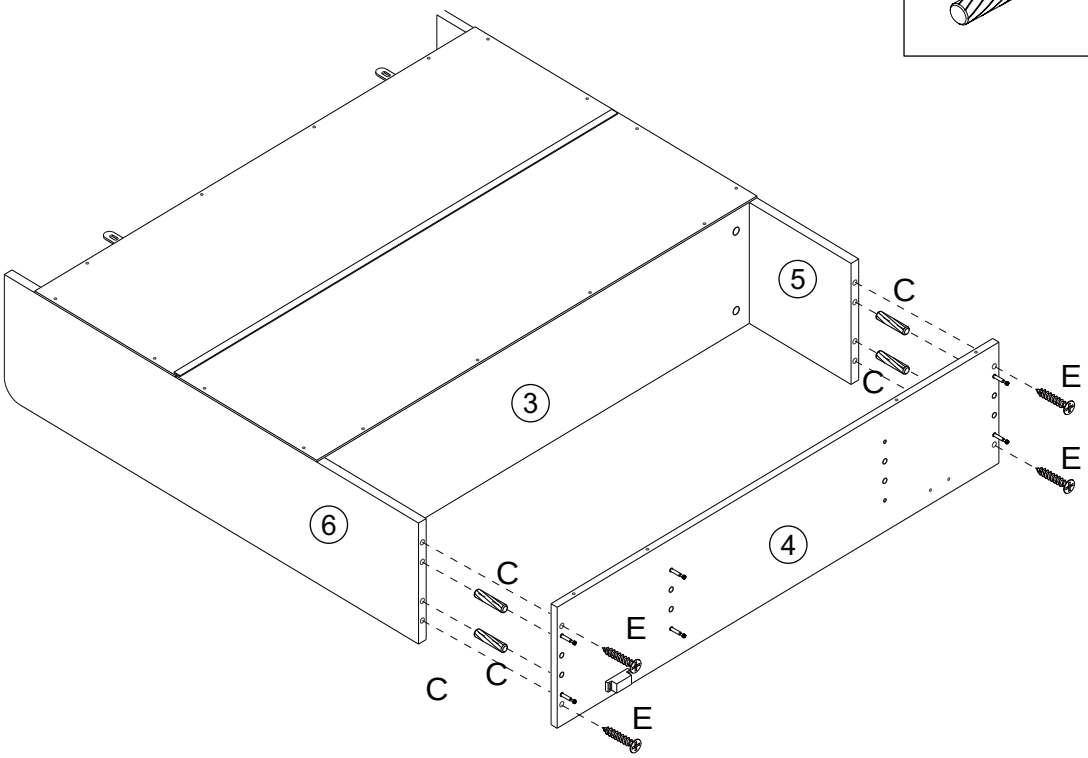

Step 8

W ×4	N ×2
	

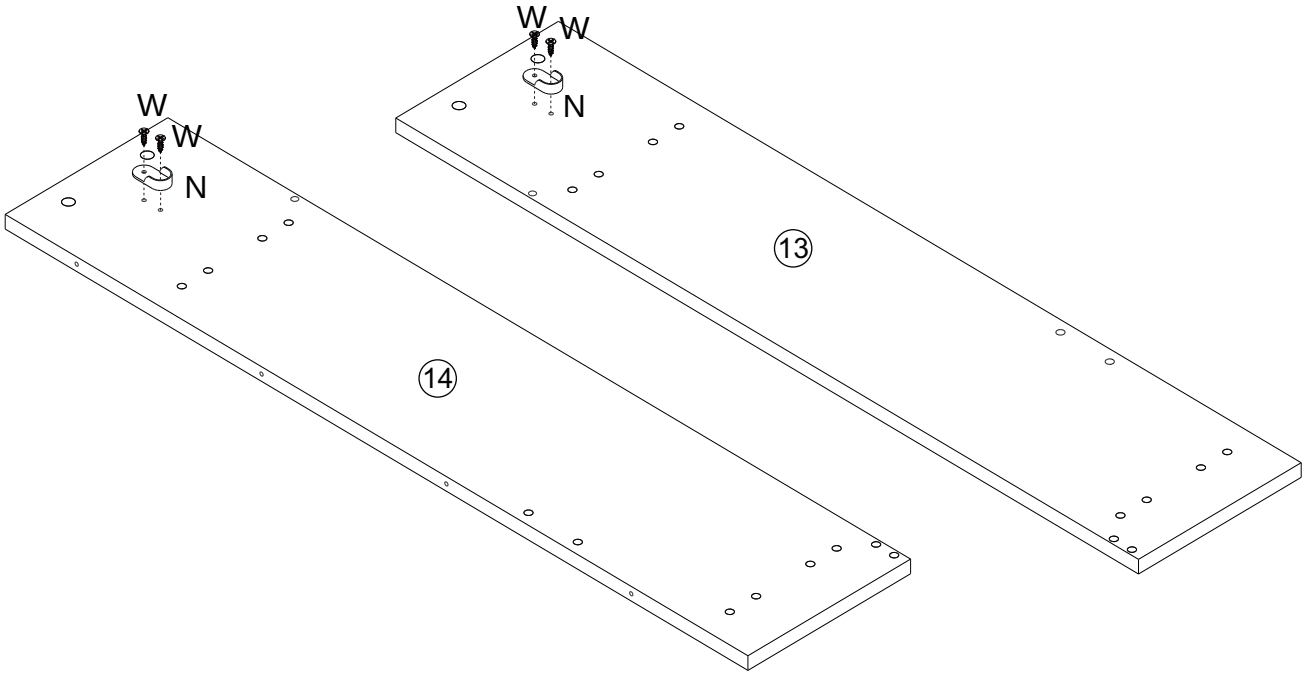

Step 9

T ×1	O ×4
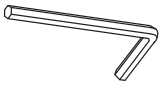	

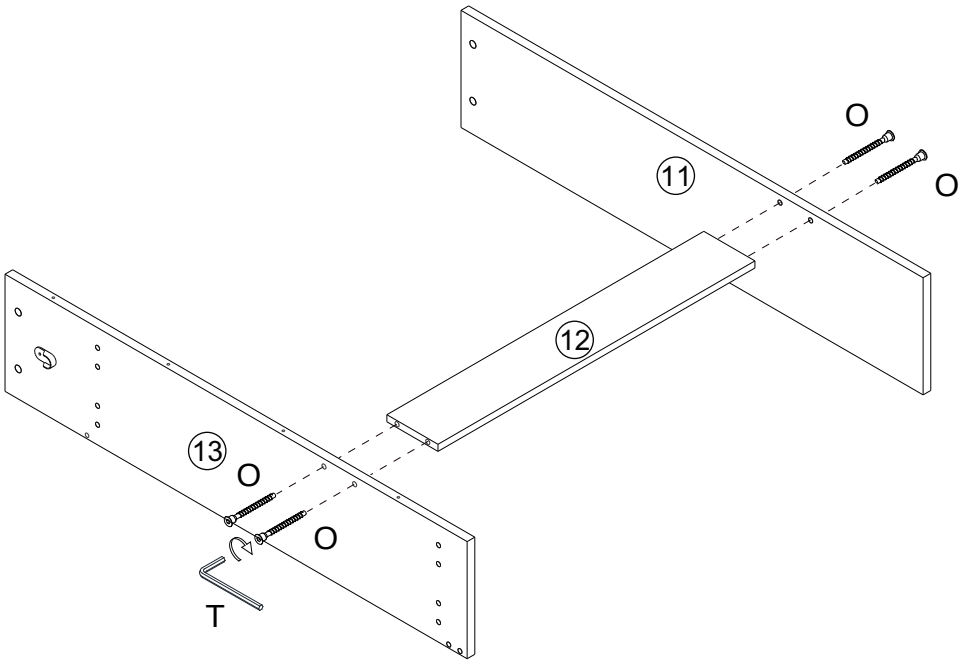

Step 10

C ×4	T ×1	O ×6
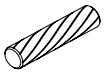	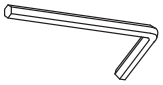	

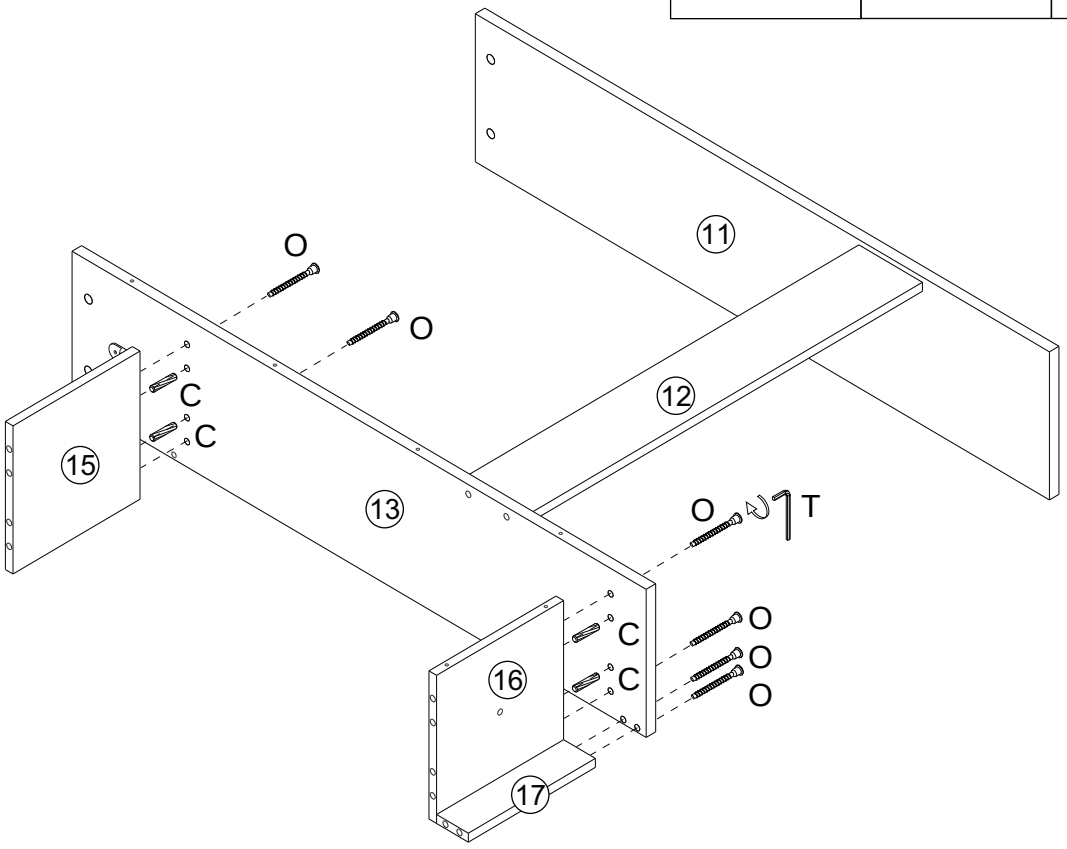

Step 11

T ×1	U ×1
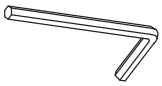	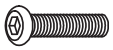

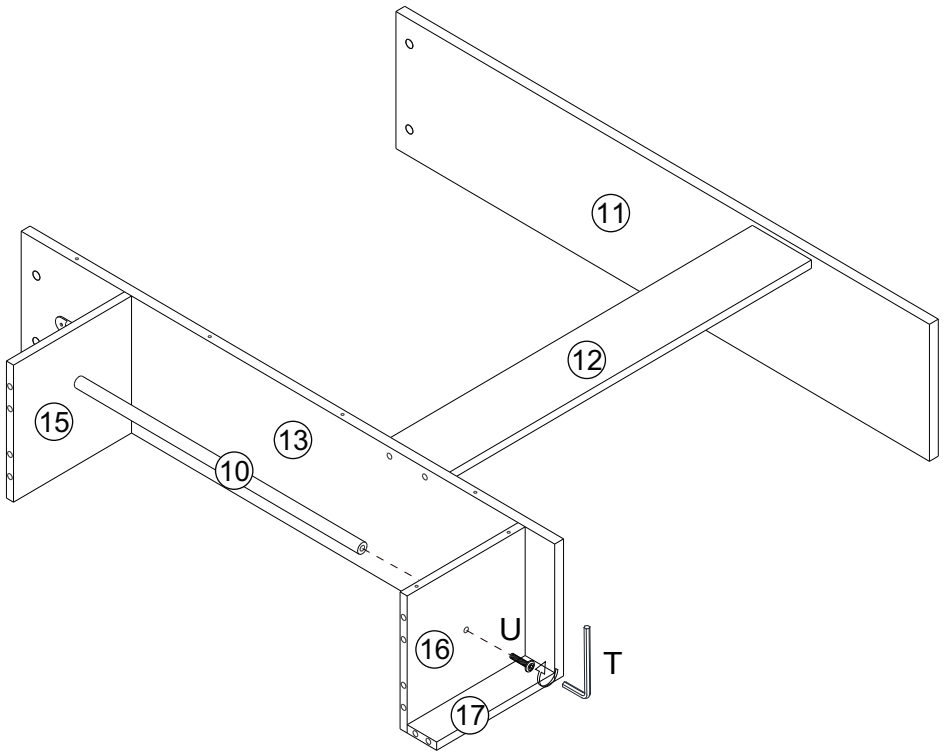

Step 12

C ×4	T ×1	O ×6
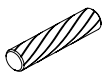	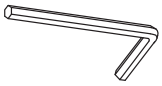	

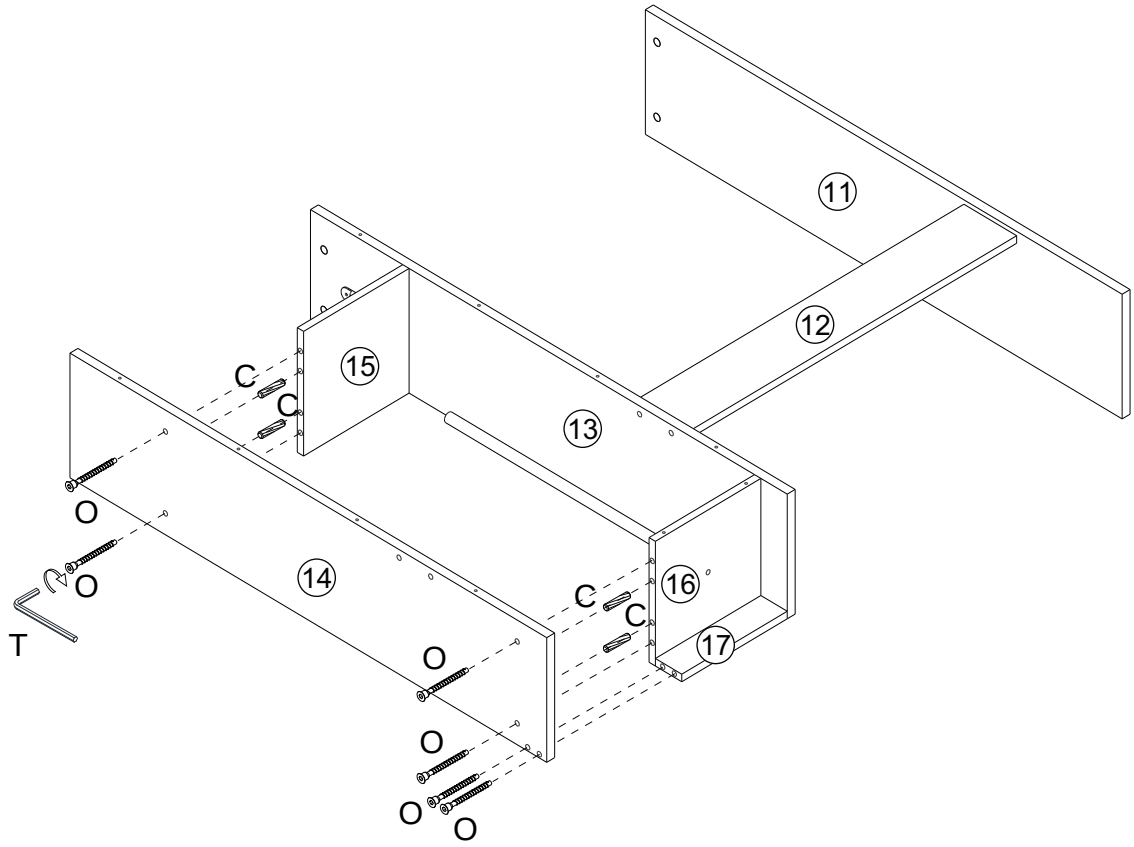

Step 13

C ×6	B ×6
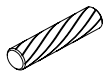	

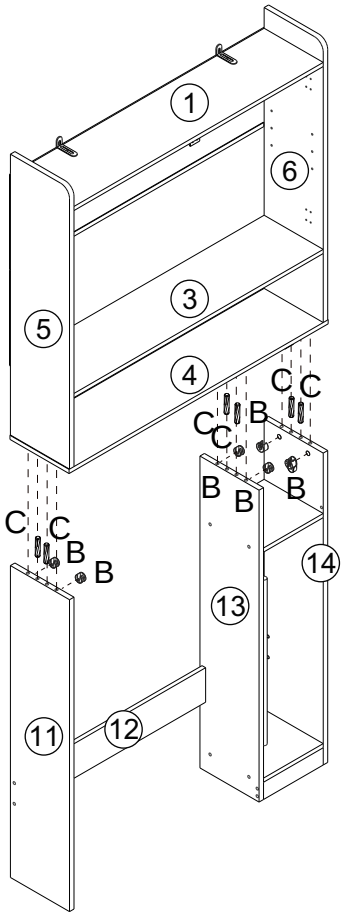

Step 14

F ×12


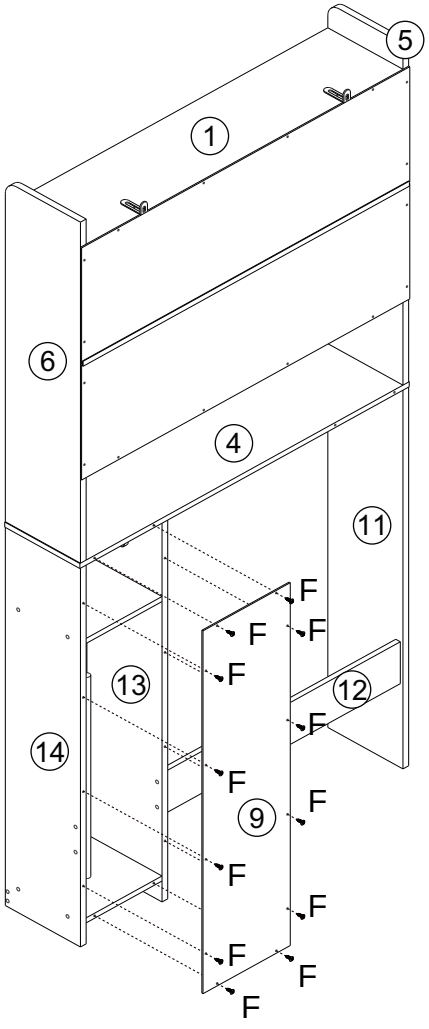

Step 15

H ×1	R ×4
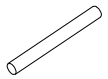	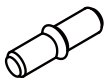

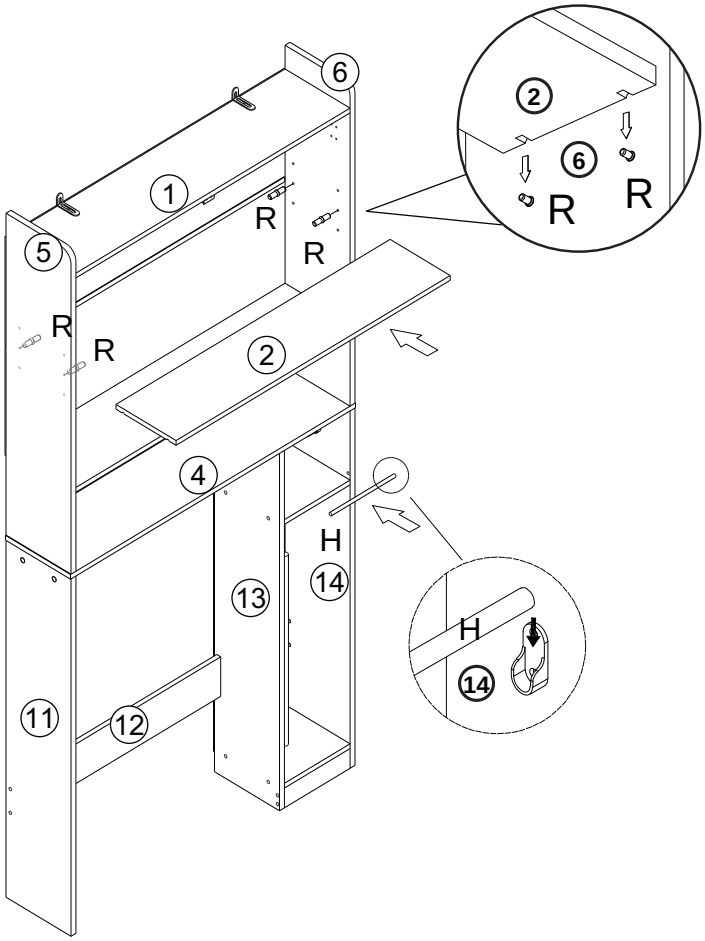

Step 16

J ×1	I ×2	D ×8	G ×4
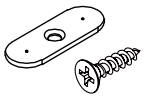			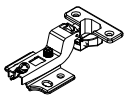

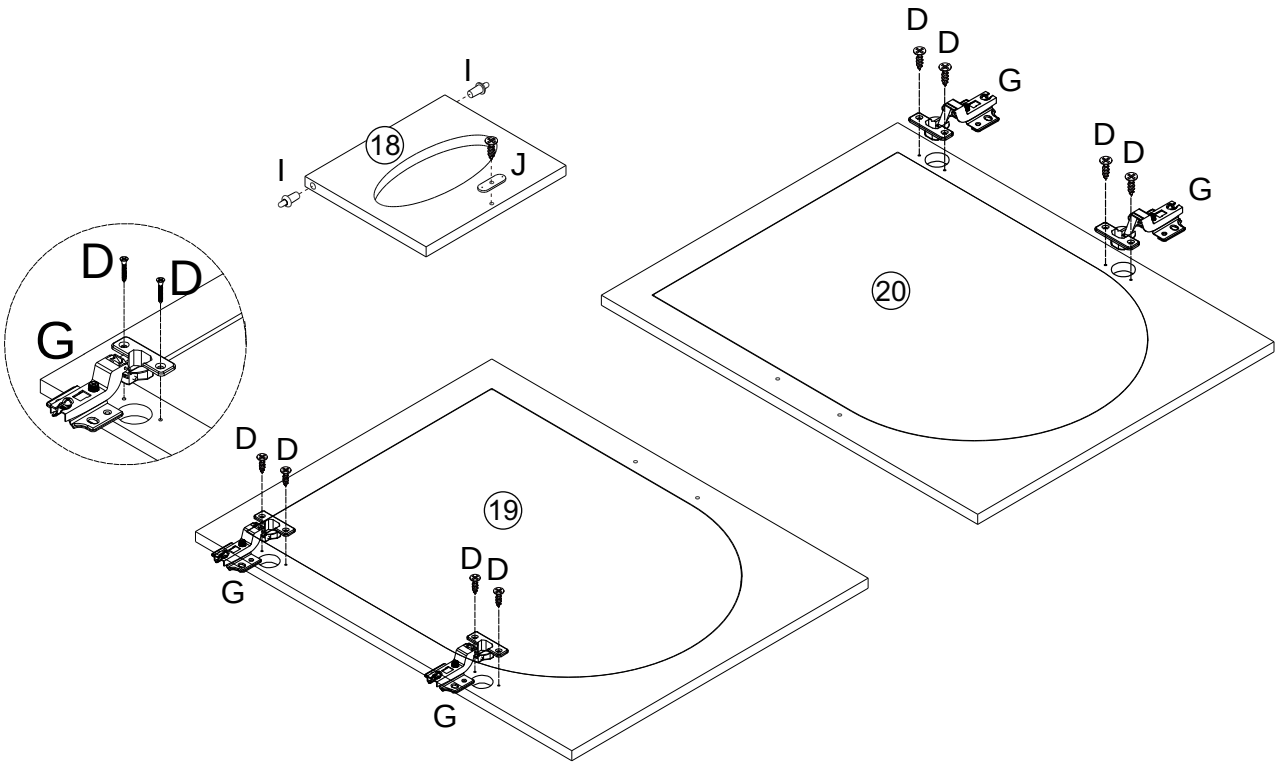

Step 17

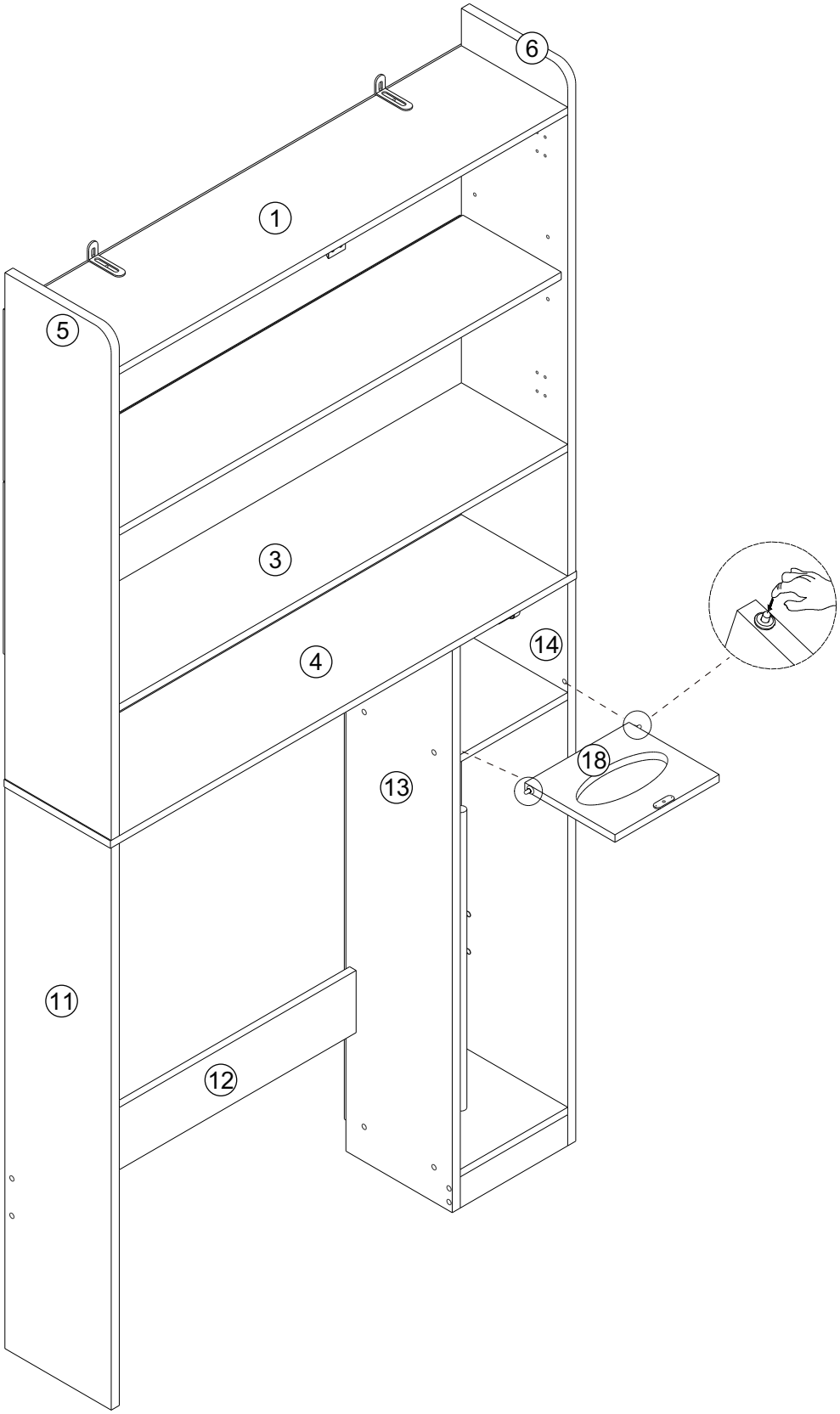

Step 18

Ⓓ ×16	Ⓟ ×4	Ⓢ ×2
		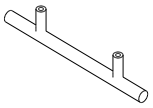

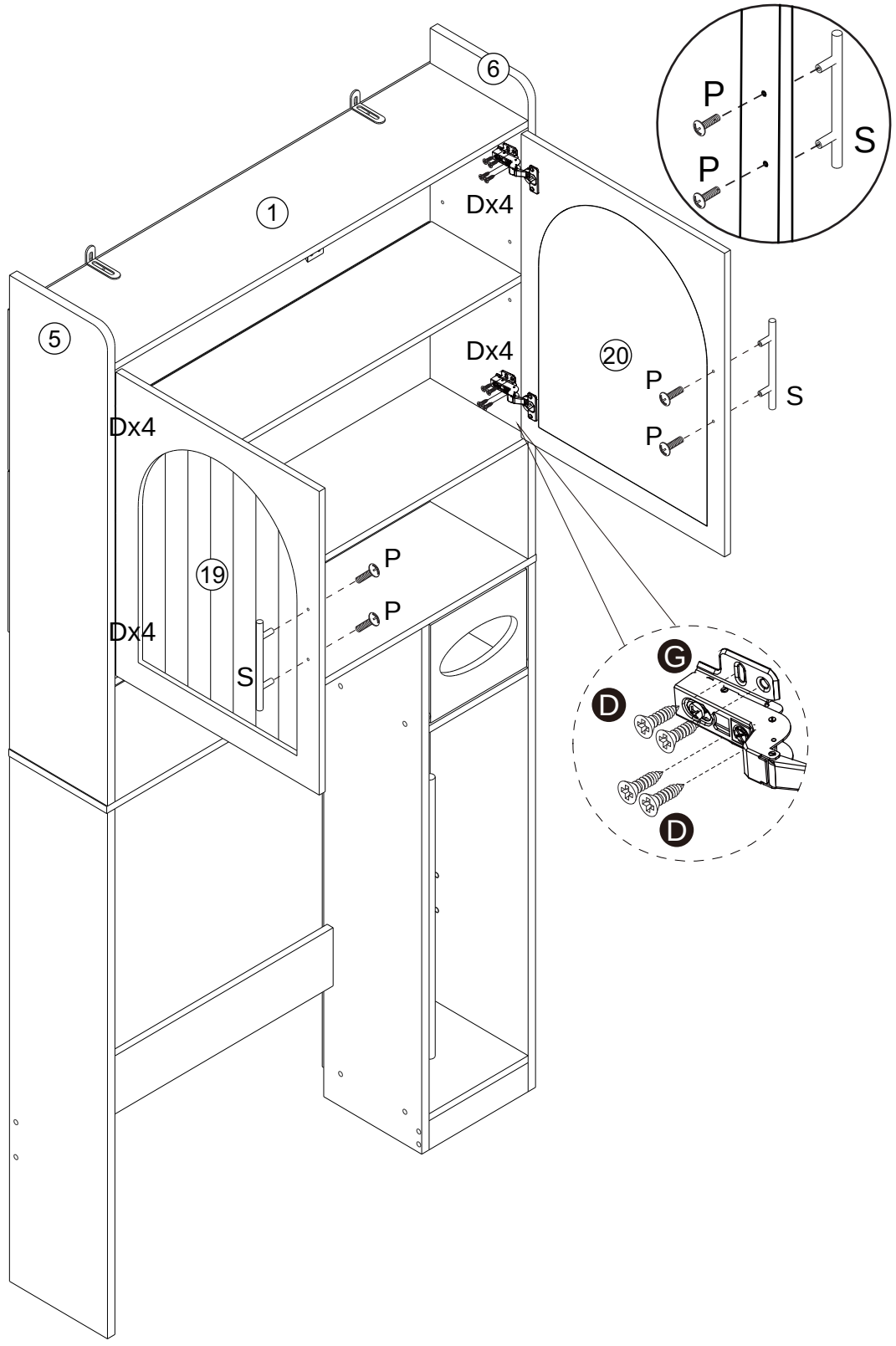

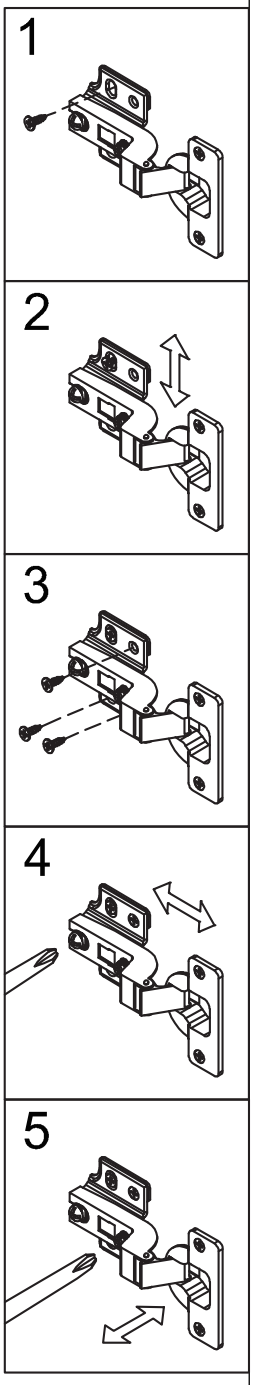

Step 19

Ⓥ ×18	Ⓜ ×2
	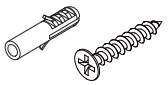

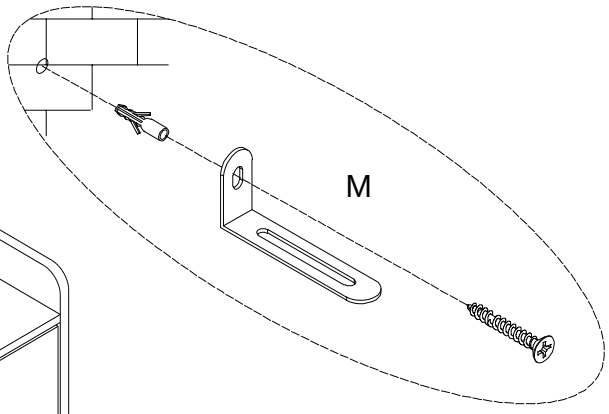

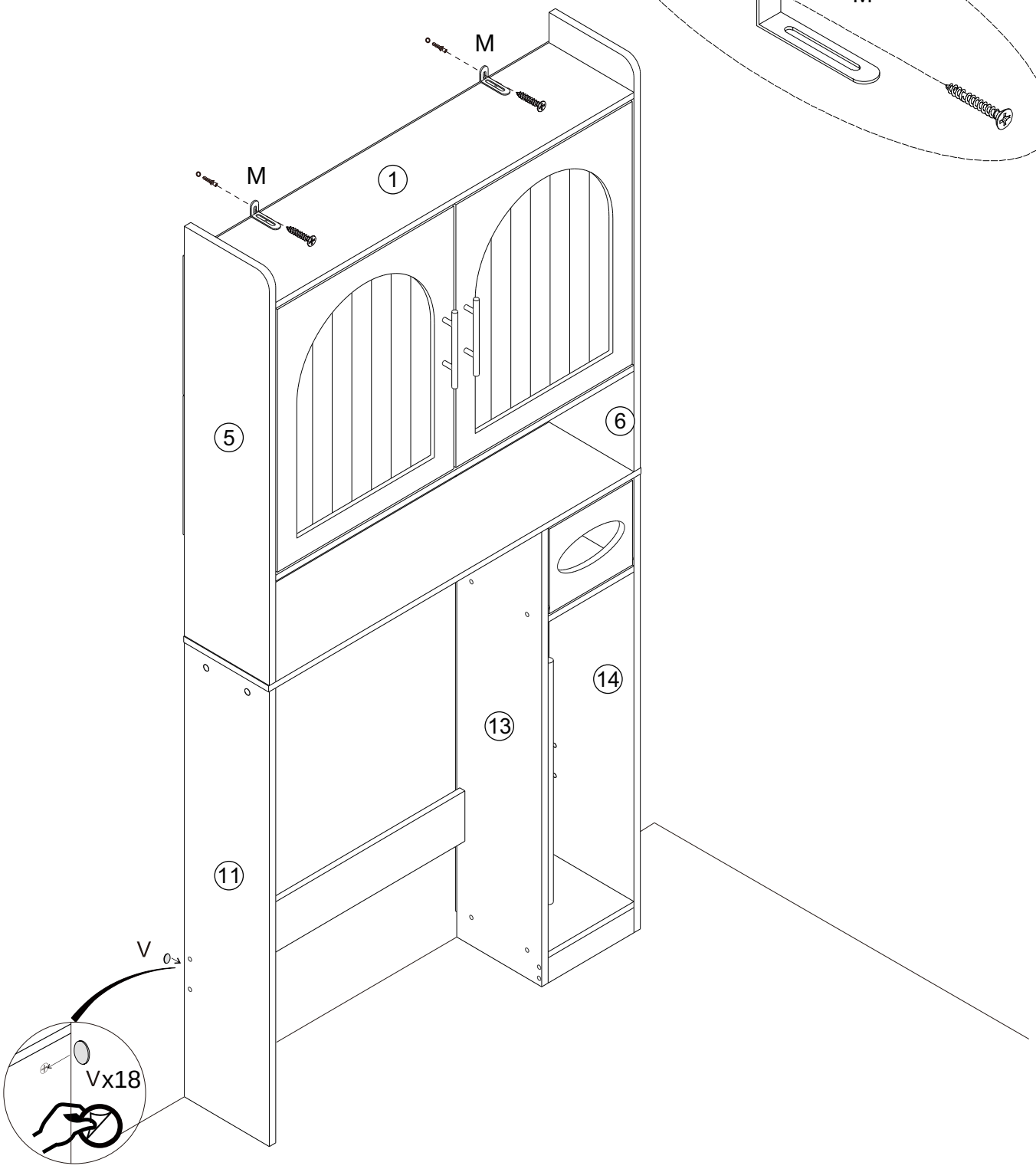

Step 20

C ×4	E ×4
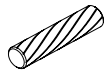	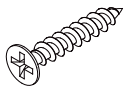

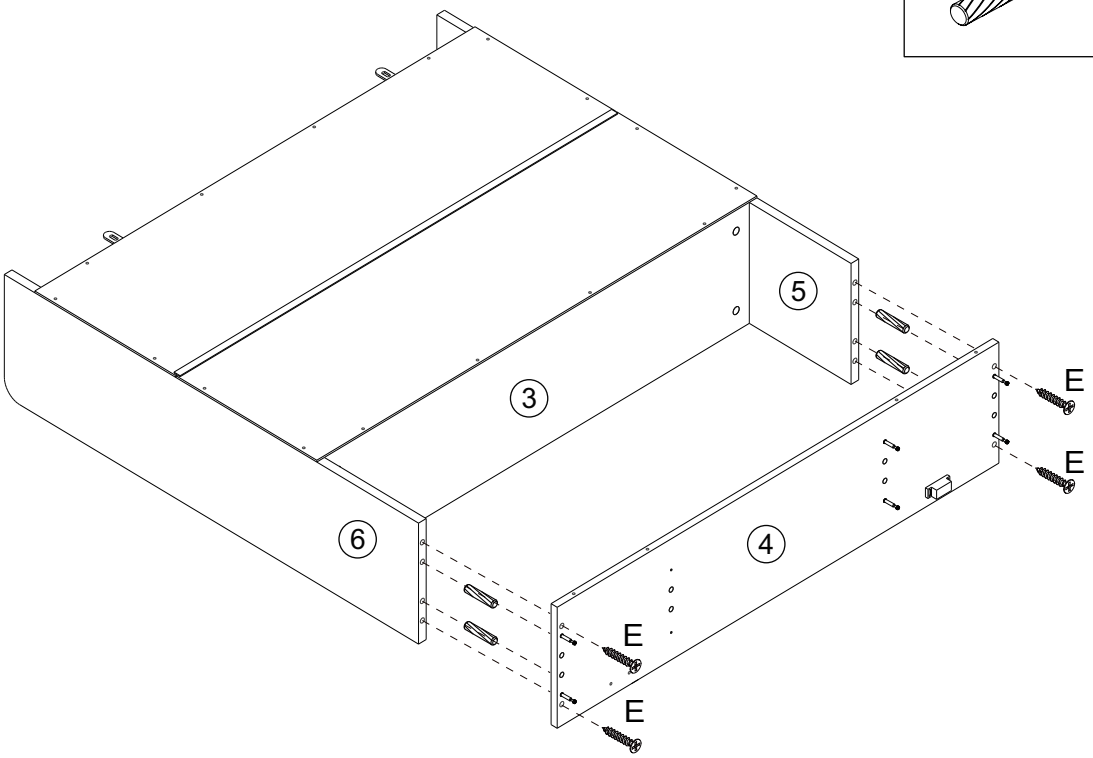

Step 21

W ×4	N ×2
	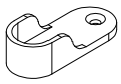

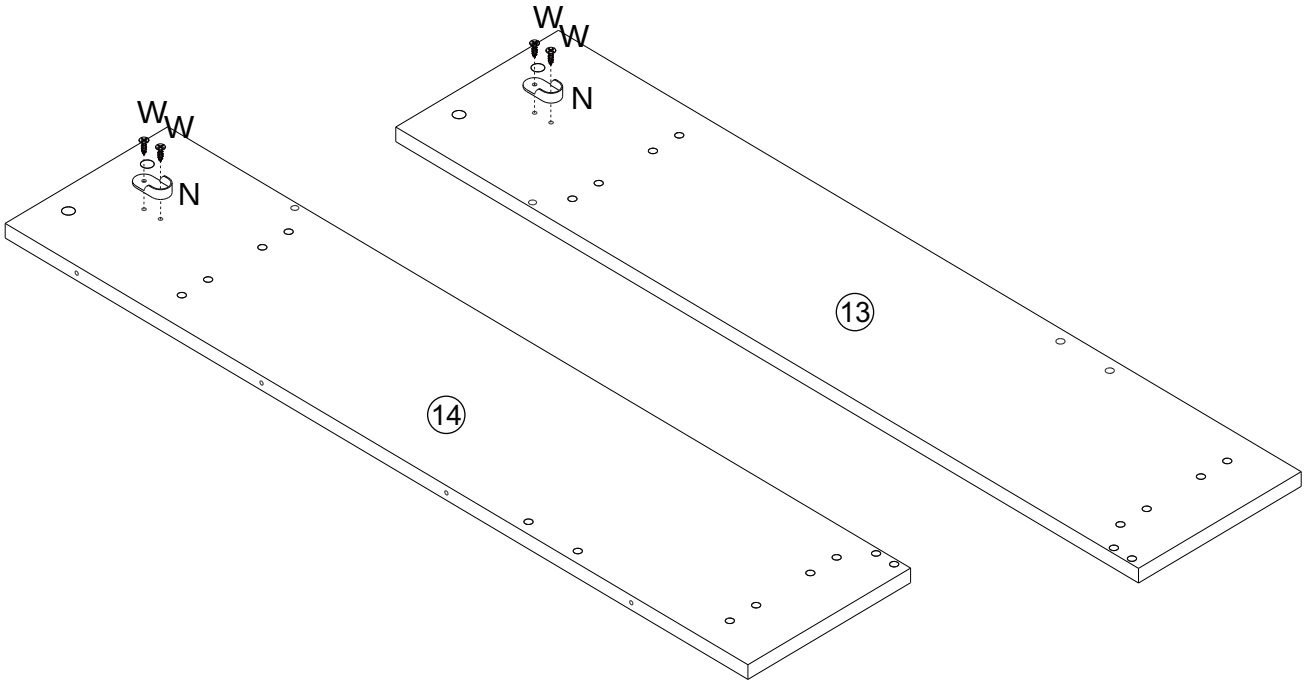

Step 22

T ×1	O ×4
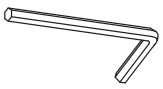	

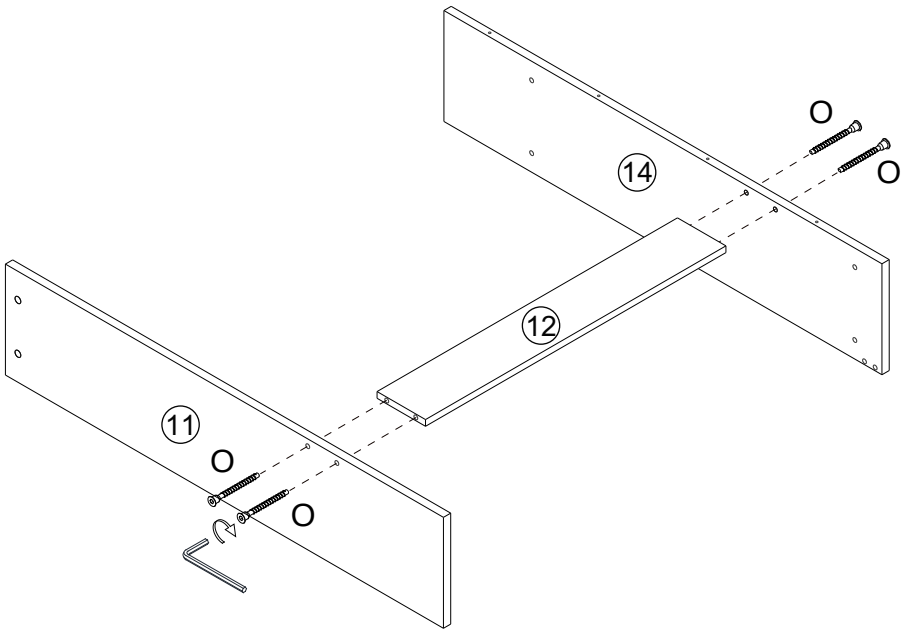

Step 23

C ×4	T ×1	O ×6
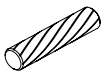	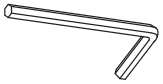	

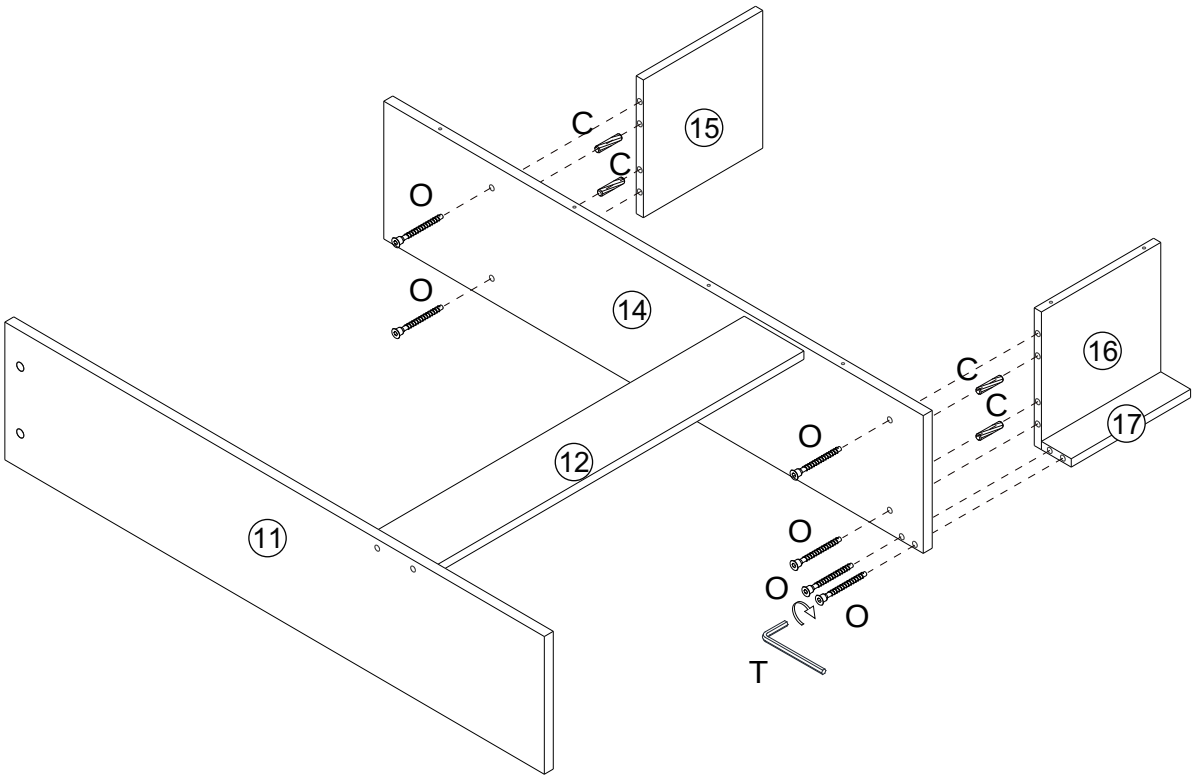

Step 24

T ×1	U ×1
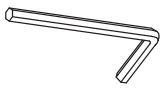	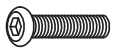

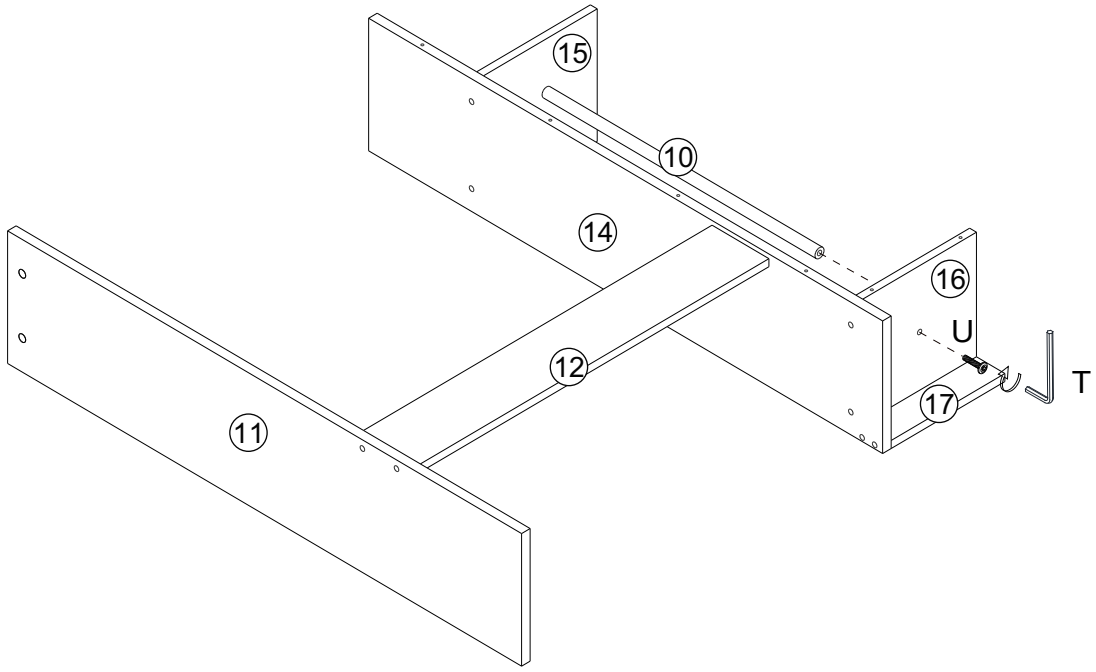

Step 25

C ×4	T ×1	O ×6
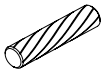	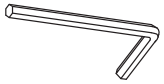	

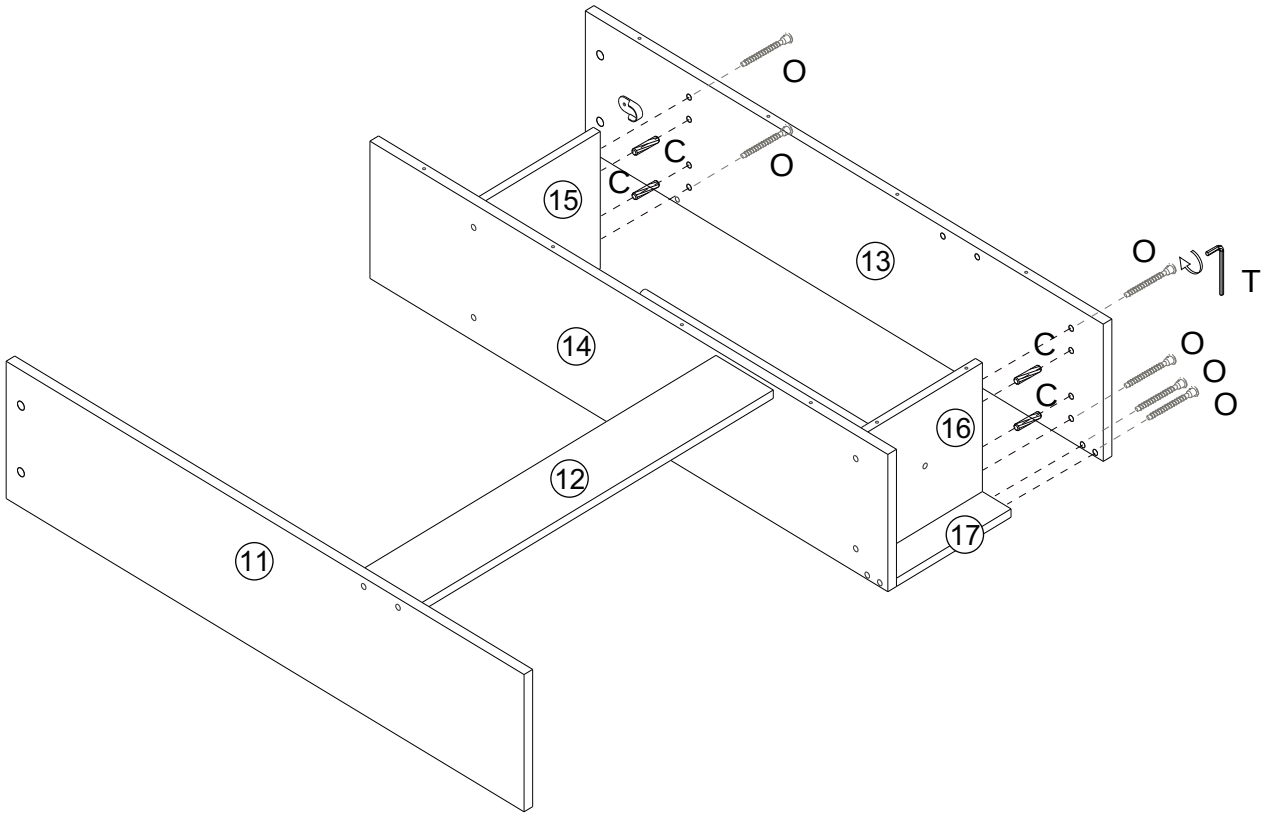

Step 26

C ×6	B ×6
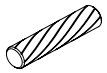	

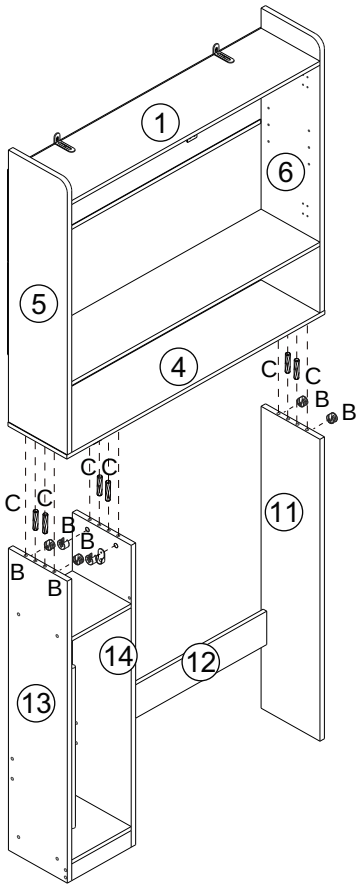

Step 27

F ×12


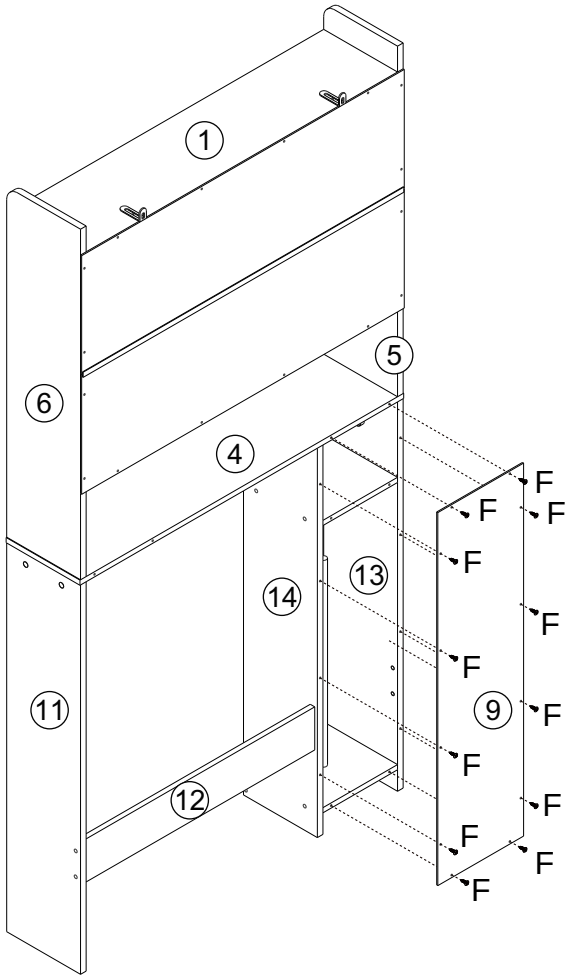

Step 28

H ×1	R ×4
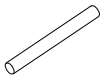	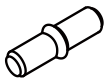

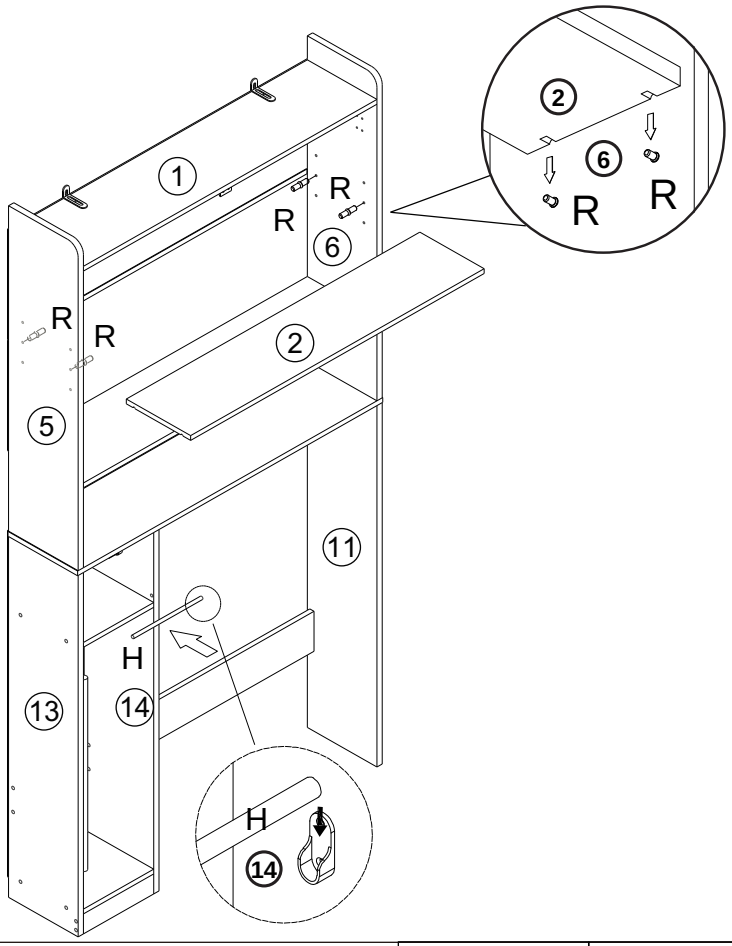

Step 29

J ×1	I ×2	D ×8	G ×4
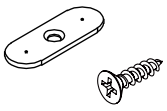			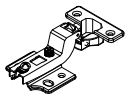

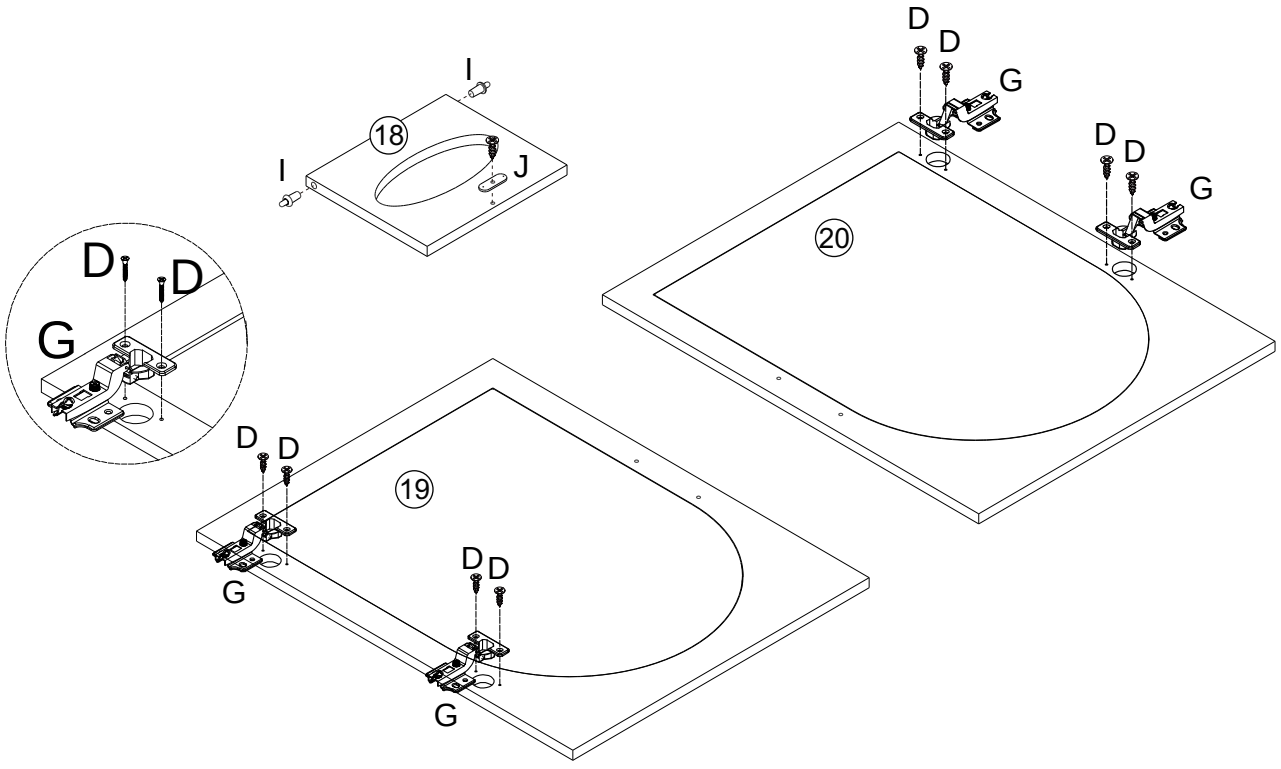

Step 30

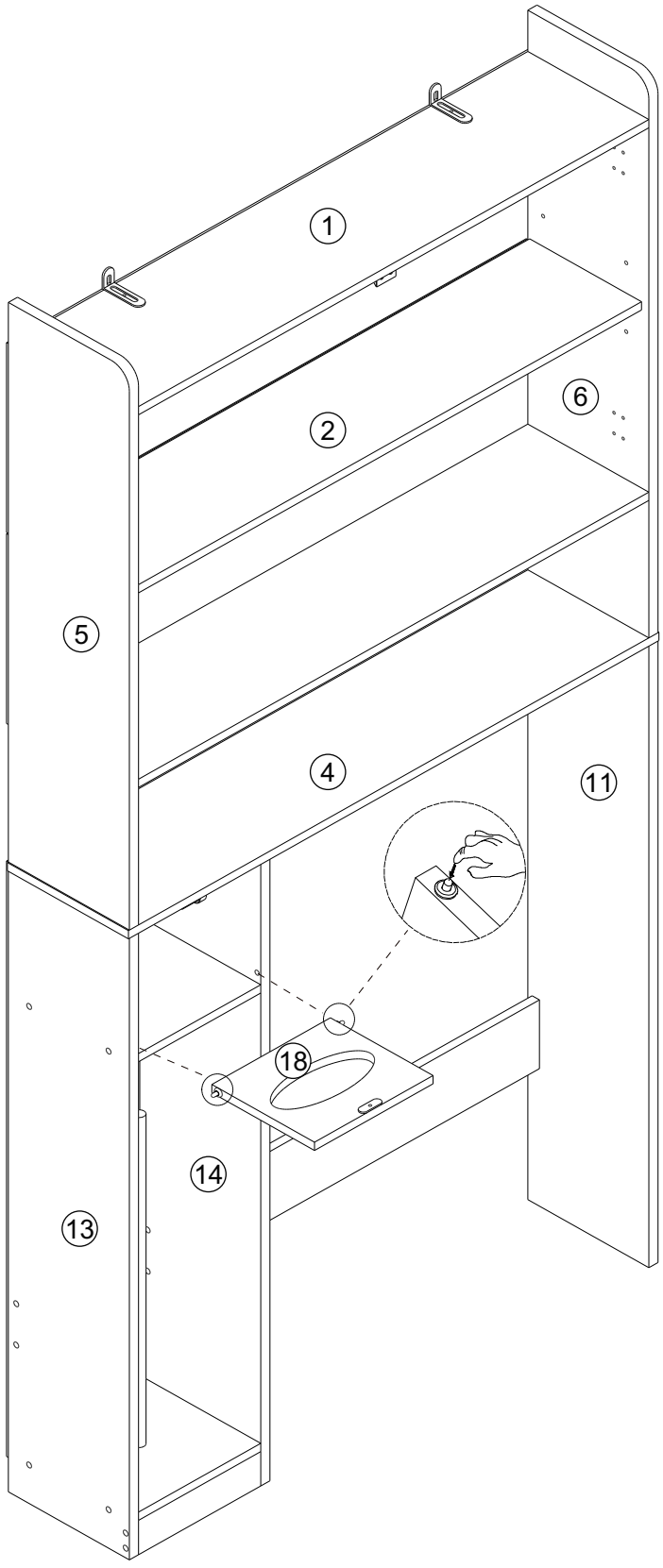

Step 31

Ⓓ ×16	Ⓟ ×4	Ⓢ ×2
		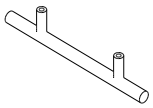

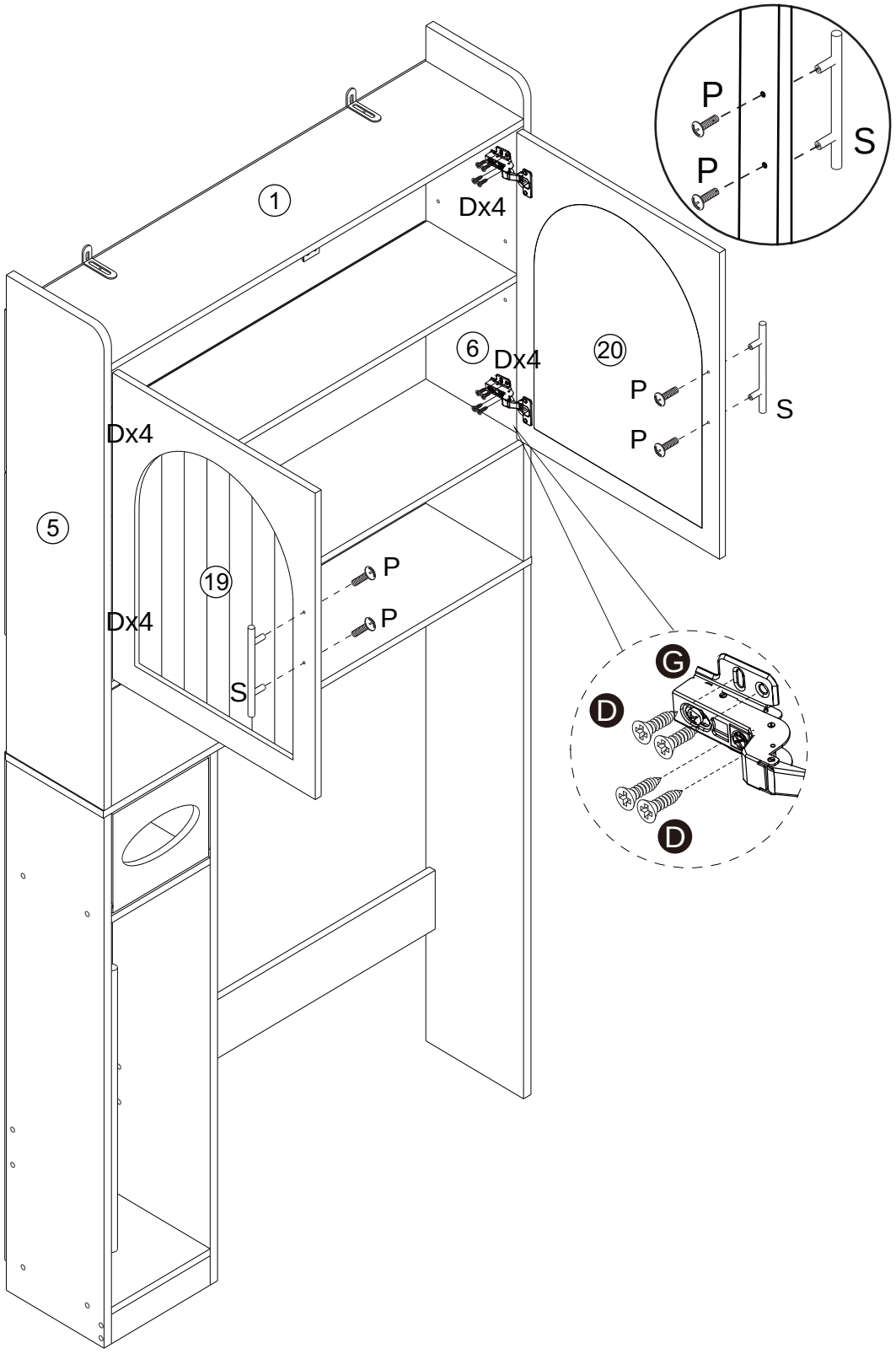

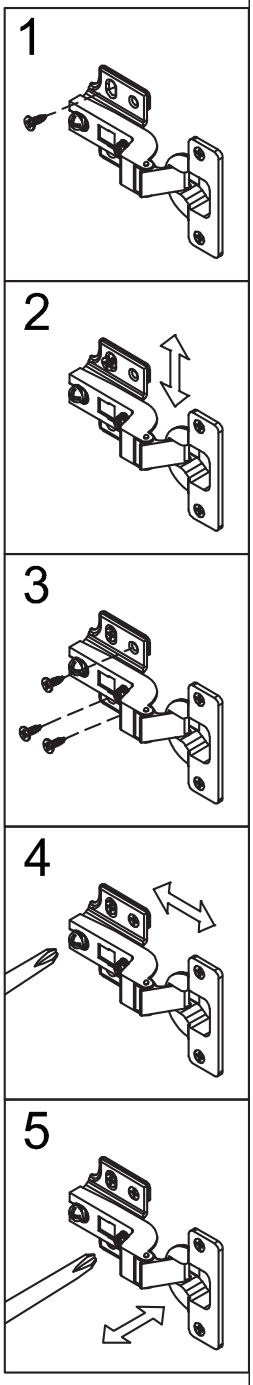

Step 32

Ⓥ ×18	Ⓜ ×2
	