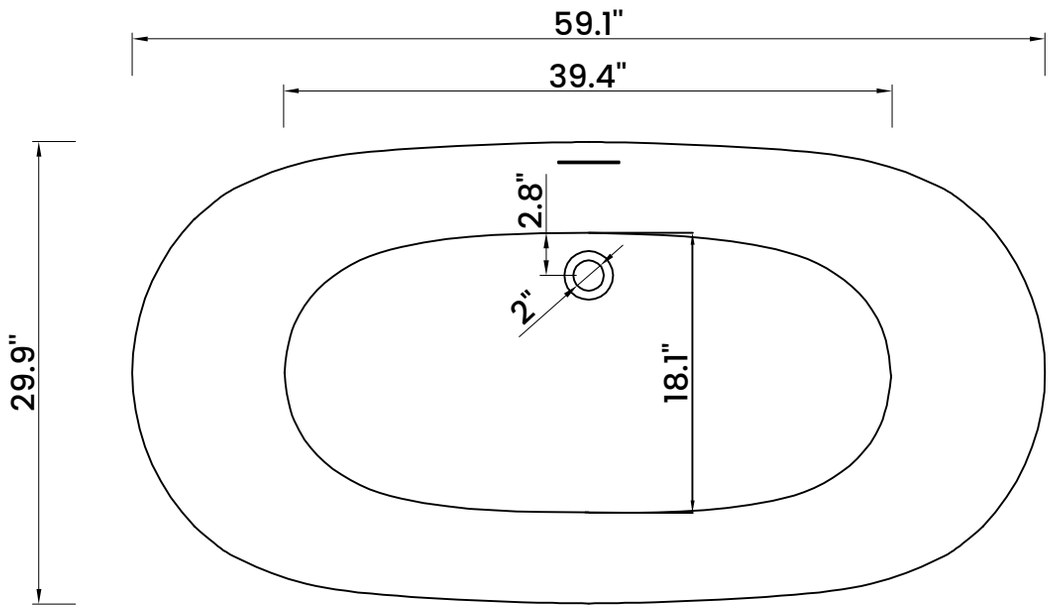
59.1"
39.4"
29.9"
2.8"
2"
18.1"

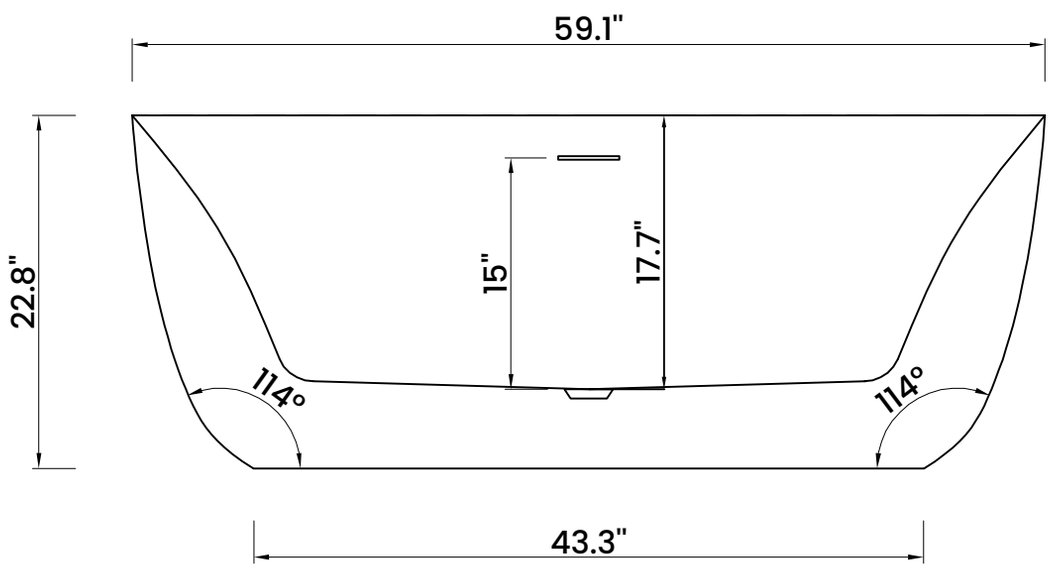
59.1"
22.8"
15"
17.7"
114°
114°
43.3"

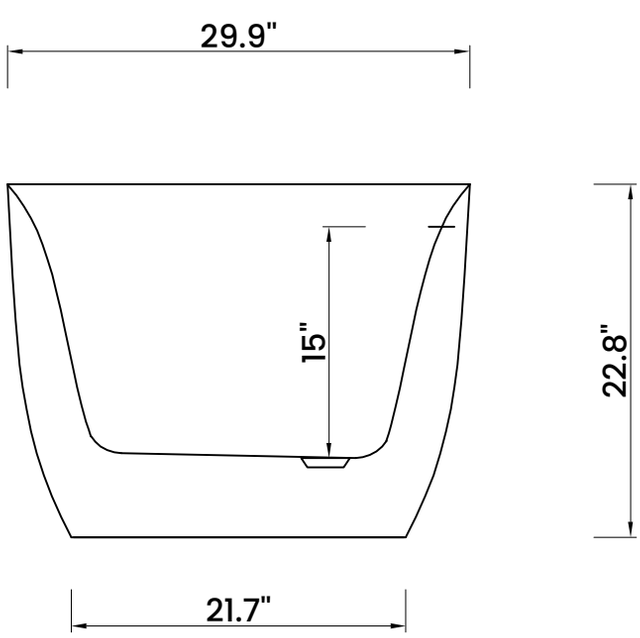
29.9"
15"
22.8"
21.7"