KOHLER. Faucets

Forté®

Rite-Temp® Shower Valve Trim

K-TS10276-4A

Features

- Includes face plate with handle, shower arm with flange and showerhead.
- Single lever handle controls both on/off activation and temperature setting.
- Coordinates with Forte faucets and accessories to complete your bathroom.
- Includes single function 2.5 gpm (9.5 l/min) showerhead.
- Showerhead features MasterClean™ sprayface for easy cleaning.
- Pressure-balancing diaphragm technology maintains outlet temperature within +/-3 degrees Fahrenheit during water pressure fluctuations.

Material

- Premium material construction with metal handle ensures reliability and durability.
- KOHLER finishes resist corrosion and tarnishing.

Installation

- Trim set requires valve to complete installation.

Required Products/Accessories

K-304/K-P304 Series Rite-Temp® Valves
or
K-304/K-P304 Series Rite-Temp® Valves
or
K-304/K-P304 Series Rite-Temp® Valves
or
K-304/K-P304 Series Rite-Temp® Valves
or
K-304/K-P304 Series Rite-Temp® Valves
or
K-304/K-P304 Series Rite-Temp® Valves
or
K-304/K-P304 Series Rite-Temp® Valves
or
K-304/K-P304 Series Rite-Temp® Valves
or
K-304/K-P304 Series Rite-Temp® Valves
or
K-304/K-P304 Series Rite-Temp® Valves
or
K-304/K-P304 Series Rite-Temp® Valves
or
K-304/K-P304 Series Rite-Temp® Valves
or
K-304/K-P304 Series Rite-Temp® Valves

Codes/Standards

ASME A112.18.1/CSA B125.1
DOE - Energy Policy Act 1992

KOHLER® Faucet Lifetime Limited Warranty

See website for detailed warranty information.

Available Colors/Finishes

Color tiles intended for reference only.

Color	Code	Description
	CP	Polished Chrome
	G	Brushed Chrome
	BN	Vibrant® Brushed Nickel

KOHLER Faucets

Forté®

Rite-Temp® Shower Valve Trim

K-TS10276-4A

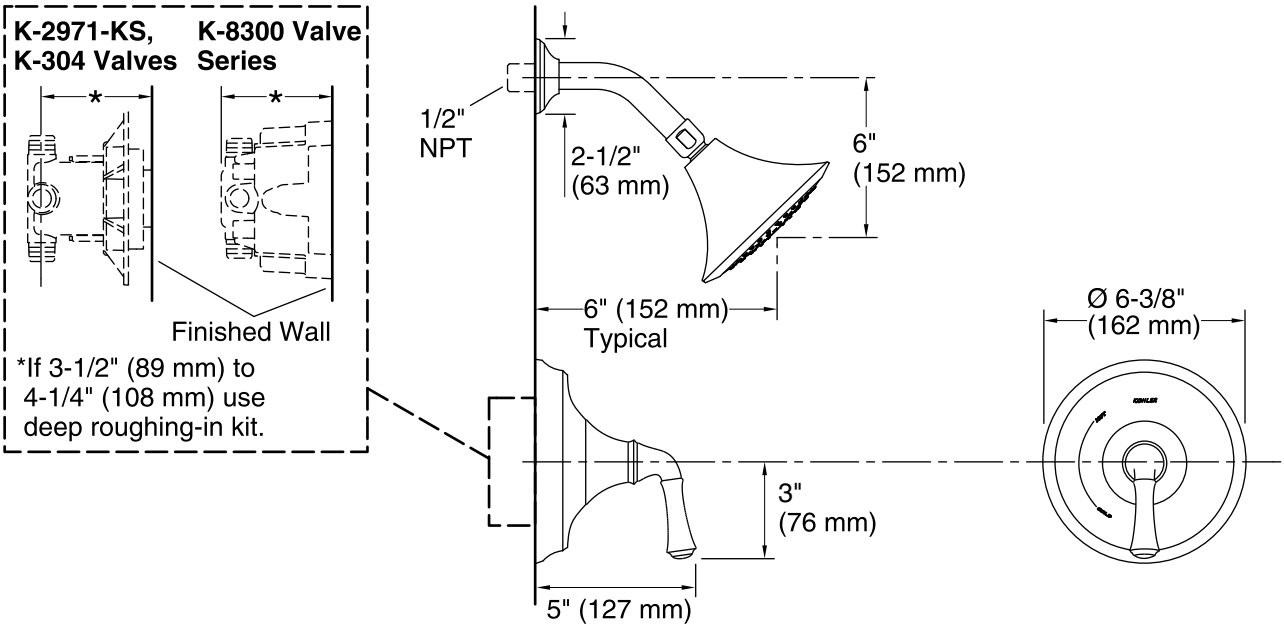

Technical Information

All product dimensions are nominal.

Showerhead/Body Spray:

Rated maximum flow: 2.5 gal/min (9.5 l/min)

Pressure: 80 psi (5.5 bar)

Notes

Install the product according to the installation guide.

Install straight pipe or tube drop of 7" (178 mm) to 18" (457 mm) with single elbow between the valve and the wall-mount spout. Elbow must be a 90 degree drop ell that is secured to rigid framing.