Assembly instructions

SAFETY WARNINGS AND GENERAL NOTES:

1. Follow the information on the warnings on the bunk bed end structure and on the carton. Do not remove the waming label from the bed.
2. Always use the recommended size mattress on mattress support,or both, to help prevent the likelihood of entrapment or falls.
3. Do not allow children under 6 years of age to use the upper bunk.
4. Periodically check and ensure the guardrail, ladder and other components are in their proper position, free from damage, and all connectors are tight.
5. Do not allow horseplay on or under beds.
6. Always prohibit jumping on the bed.
7. Prohibit more than one person on upper bunk.
8. Always use the ladder for entering and leaving the upper bunk.
9. Do not use substitute parts. Contact the manufacturer or dealer for replacement parts.
10. Use of a night-tight may provide added safety precaution for a child using the upper bunk.
11. Always use guardrails on both long sides of the upper bunk.
12. If the bunk bed will be placed next to a wall, the guardrail that runs the full length of the bed should be placed against the wall to prevent entrapment between the bed and the wall.
The use of water or sleep flotation mattresses is prohibited.
13. **STRANGULATION HAZARD**-Never attach or hang items to any part of the bunk bed that are not designed for use with the bed ; for example, but not limited to, hooks, belts and jump ropes.
14. Keep these instructions for future reference.
15. We recommend assembling your bunk bed on the shipping carton to protect your floor or carpet.
16. Be certain all staples are out of the box before beginning assembly on the shipping carton.
17. USE ONLY MATTRESSES WHICH ARE AS THE TABLE BELOW ON UPPER AND ON LOWER BUNKS.

Down bed

Bed type	Length	Width	Thickness
Twin XL Standard	79″ - 80″	38 ½"	6″ max

Up bed (bunk bed and tribed included)

Bottom type	Length	Width	Thickness
Queen Standard	79″ -80″	59 ½"	8″ max

(And add additional storage space)

18. SURFACE OF MATTRESS MUST BE AT LEAST 5"(127MM) BELOW THE UPPER EDGE OF GUARDRAILS.
19. Replacement Parts:
Replacement Parts, including additional guardrails, may be obtained from any of our dealers.

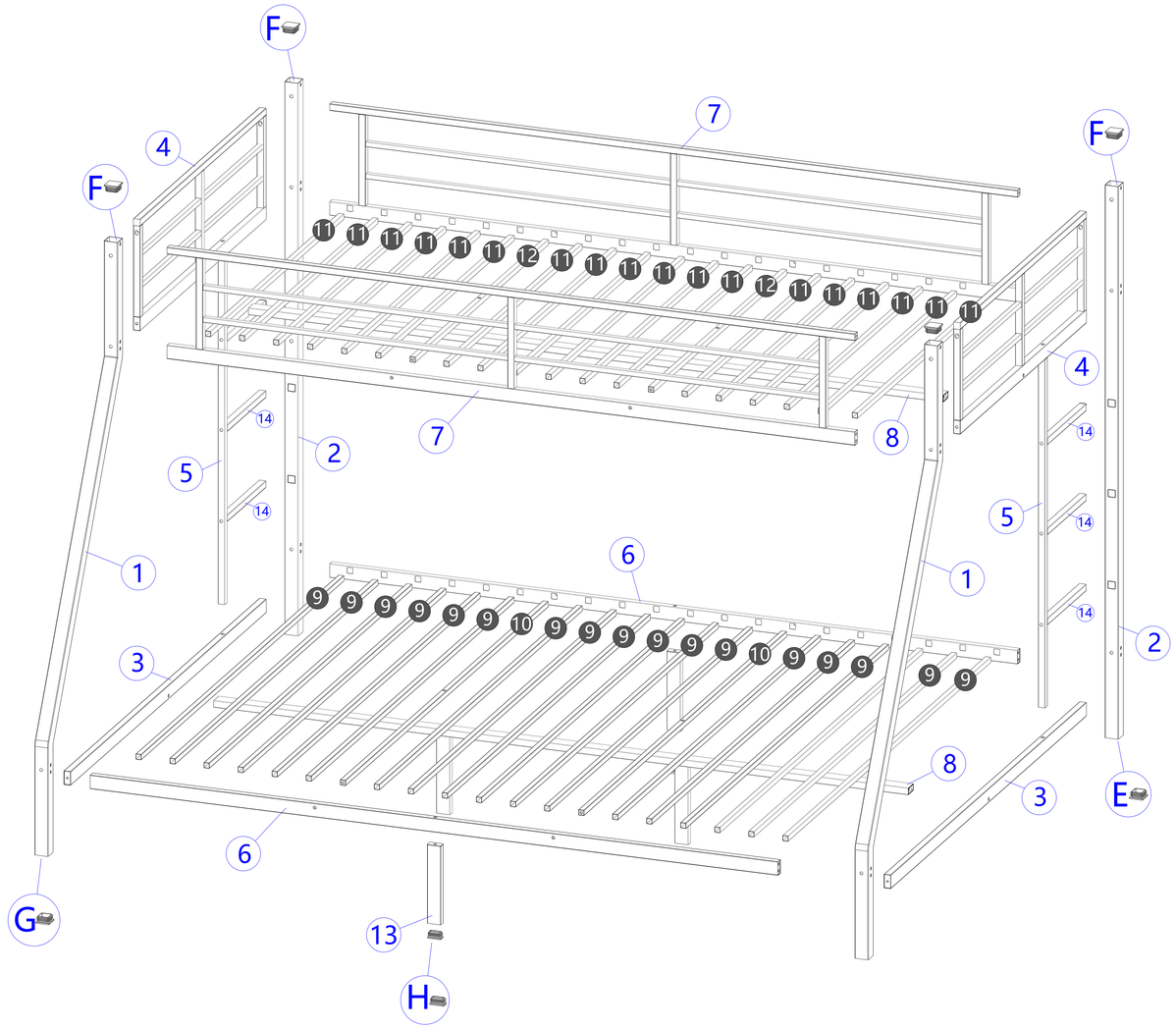

PART LIST

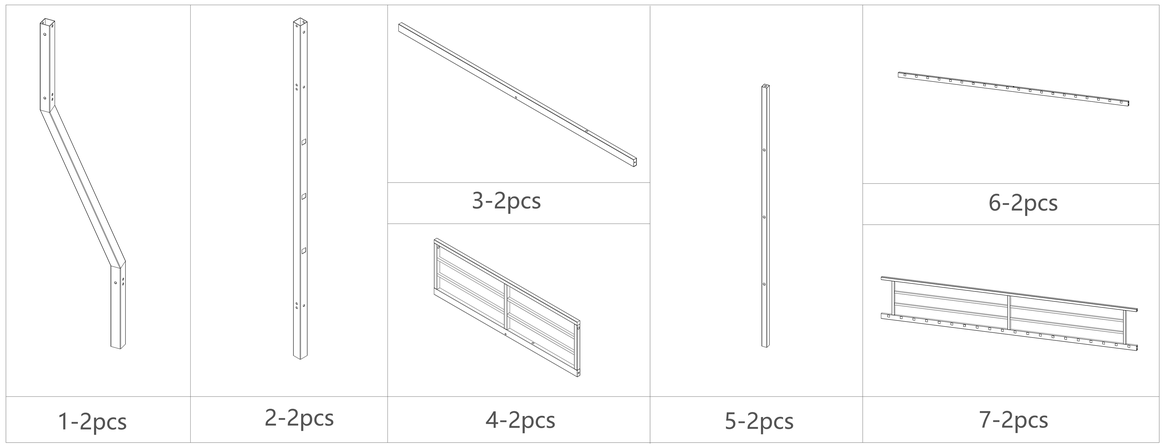

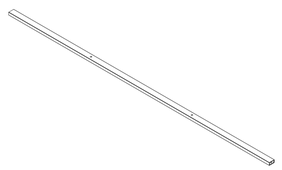	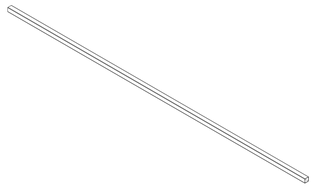	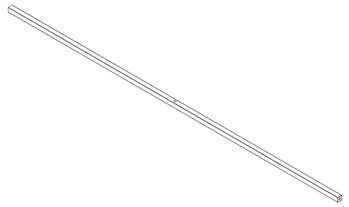	
8-2pcs	9-18pcs	10-2pcs	
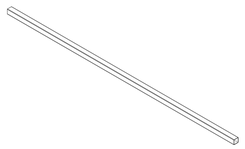	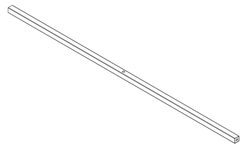		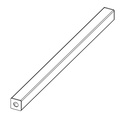
11-18pcs	12-2pcs	13-4pcs	14-6pcs

HARDWARE LIST

A	B	C	D φ8*16-6pcs E	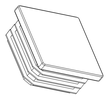 G	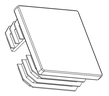 F	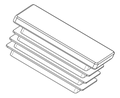 H	L
8*55-40pcs	8*35-4pcs	8*30-16pcs	8*16-6pcs	4pcs	4pcs	4pcs	2pcs

Step 1: Use hardware A, L, and connect #2, #7, #6 and #13 together.

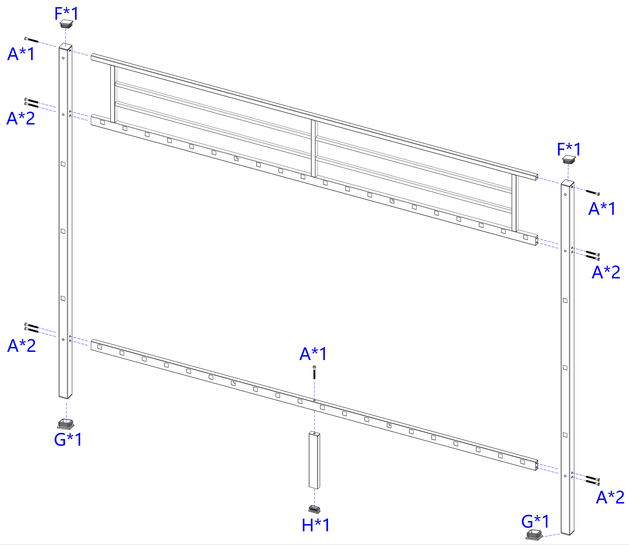

	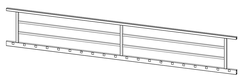			A 8*55-11pcs 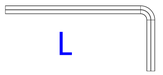 L
2-2pcs	7-1pcs	6-1pcs	13-1pcs	

Step 2: Use hardware A and L to connect #1 and #7 together.

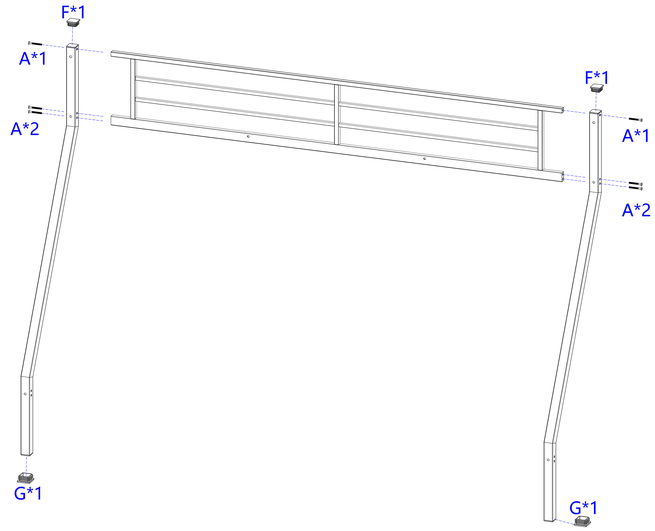

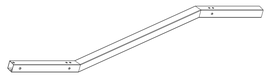	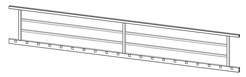	A 8*55-6pcs	L
1-2pcs	7-1pcs		

Step 3: Use hardware A, B, and L to connect #3 and #8 to the front part.

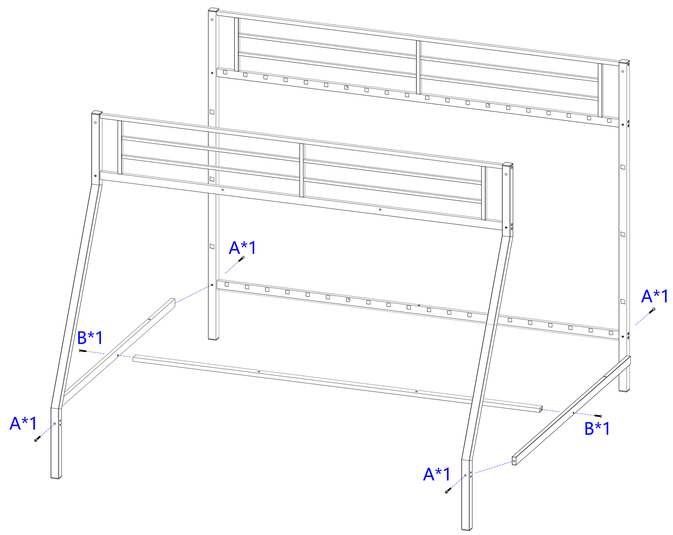

	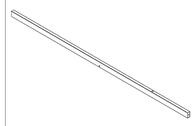	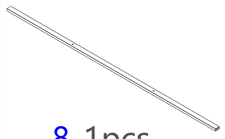	B 8*35-2pcs	A 8*55-4pcs	L
	3-2pcs	8-1pcs			

Step 4: Use #9 and #10 to insert the corresponding square hole of #6.

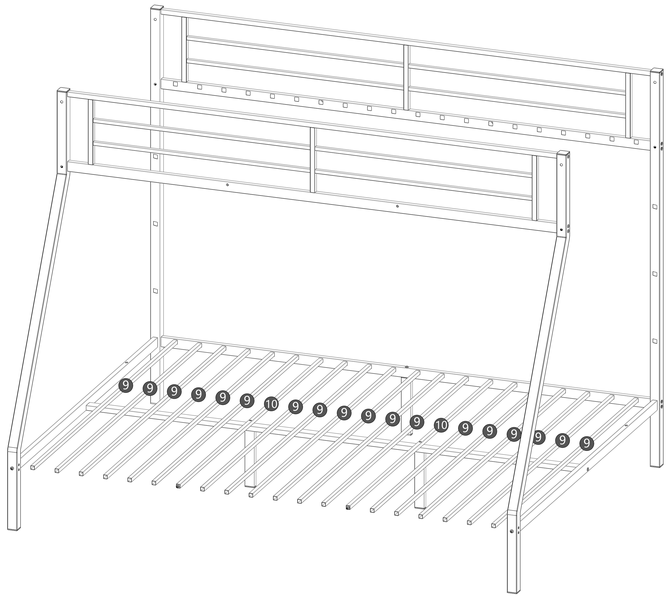

9-18pcs	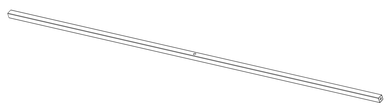 10-2pcs

Step 5: Use hardware A, C, and L to connect #6 together.

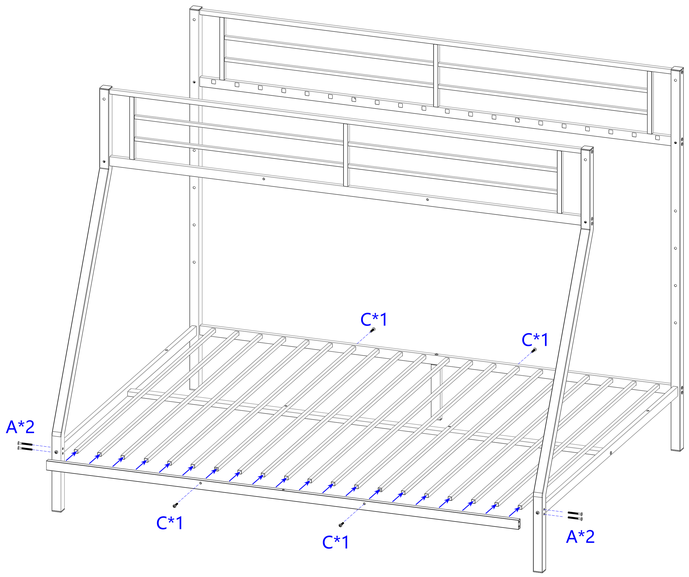

6-1pcs	C 8*30-4pcs	A 8*55-4pcs	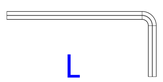 L

Step 6: Use hardware A and L to connect #13 together.

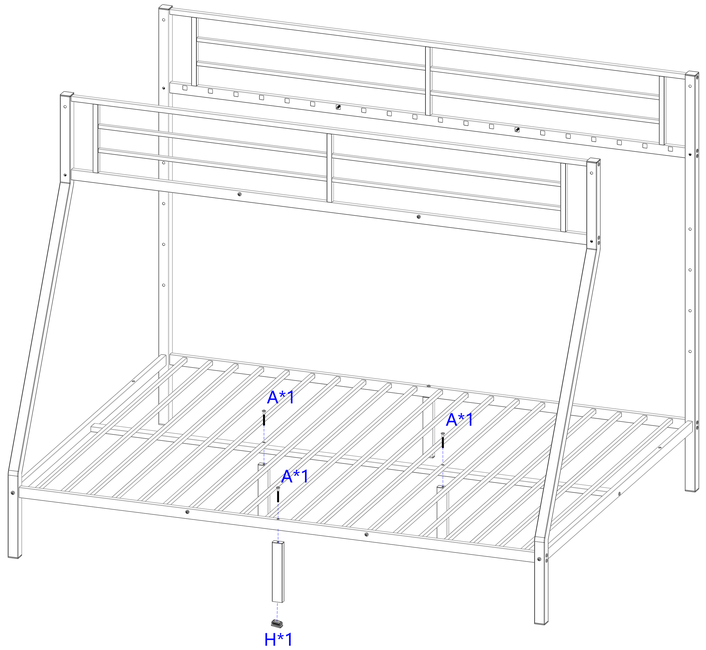

13-3pcs	A 8*55-3pcs	L

Step 7: Use hardware A,C,E,L to connect #5,#14 together.

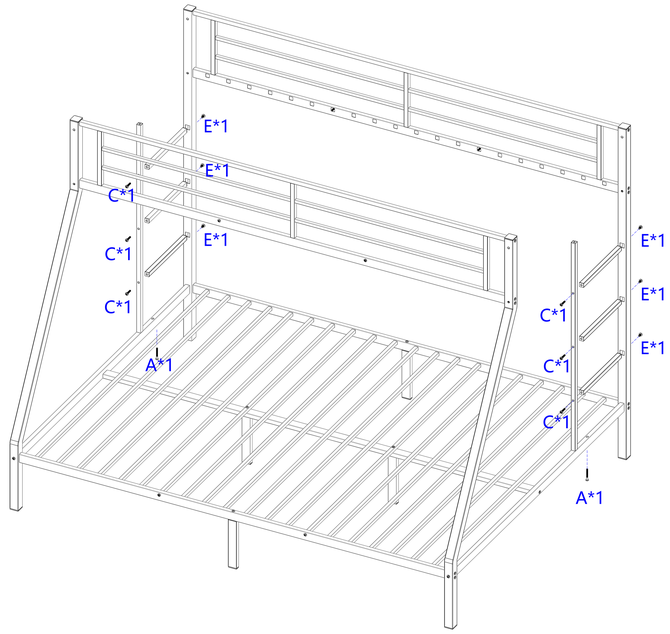

5-2pcs	14-6pcs	C 8*30-6pcs	E 8*16-6pcs	A 8*55-2pcs	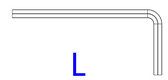 L

Step 8: Use hardware A, L, and D to connect #4 together.

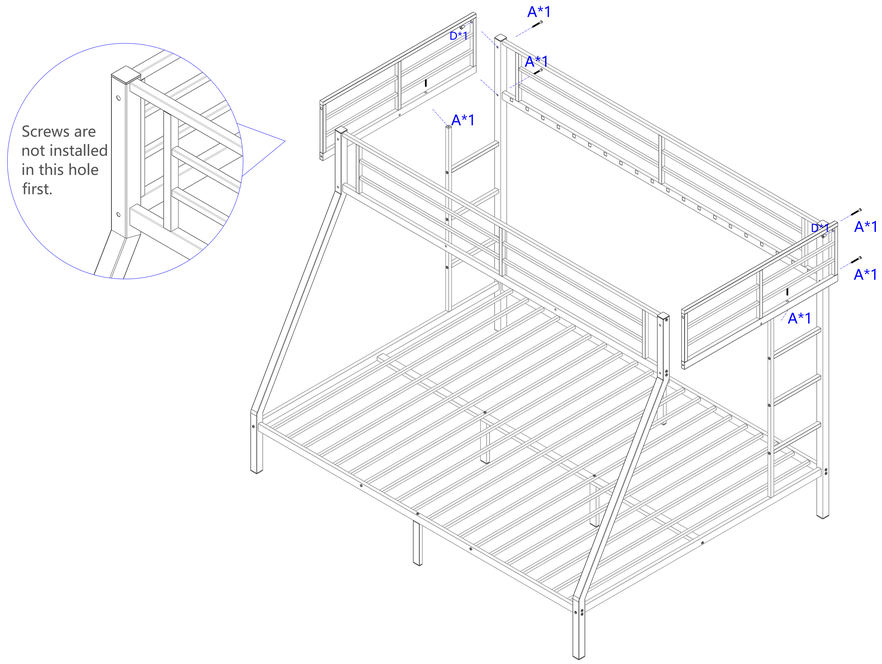

4-2pcs	D 8*16-2pcs	A 8*55-6pcs	L

Step 9: Use hardware B and L to connect #8 together.

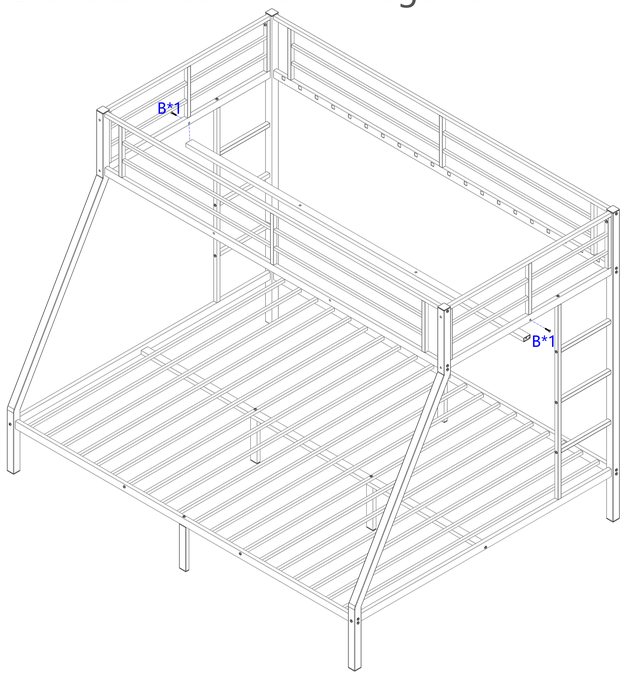

8-1pcs	B 8*35-2pcs	L

Step 10: Use #11 and #12 to insert #7 into the corresponding square hole.

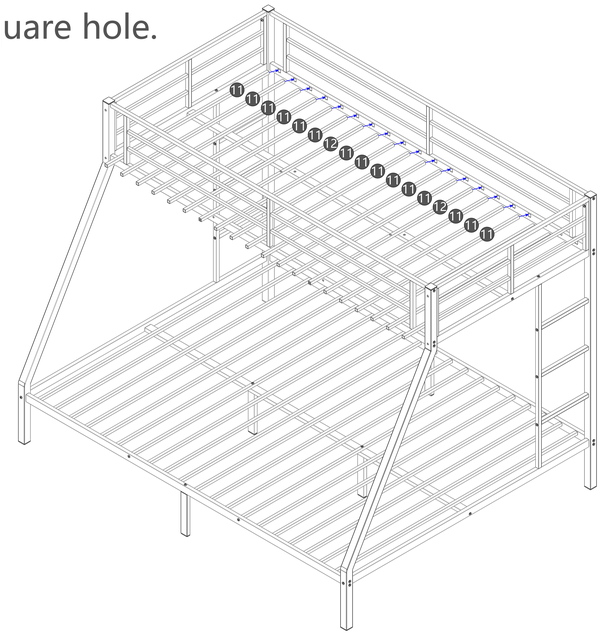

11-18pcs	12-2pcs

Step 11: Use hardware A and D to tighten the #1 and #4 connections, hardware C and D to tighten the #8 and #12 connections, and hardware C to tighten the #7 and #12 connections.

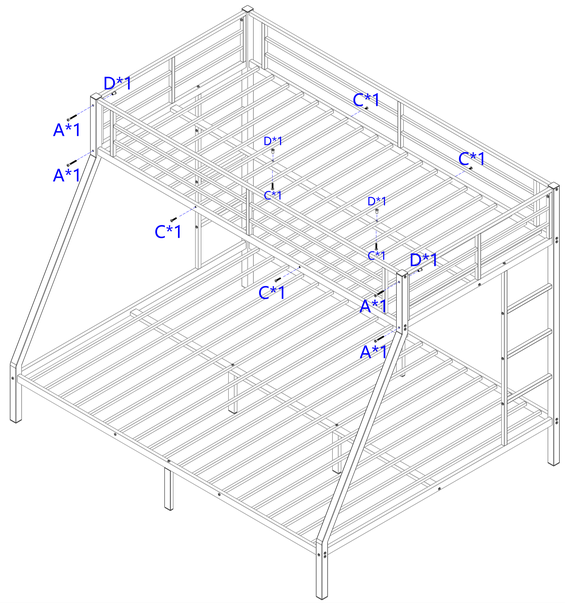

C 8*30-6pcs	D 8*16-4pcs	A 8*55-4pcs	L

Completed attic bed

Note: Tighten all the steps before use, thank you.

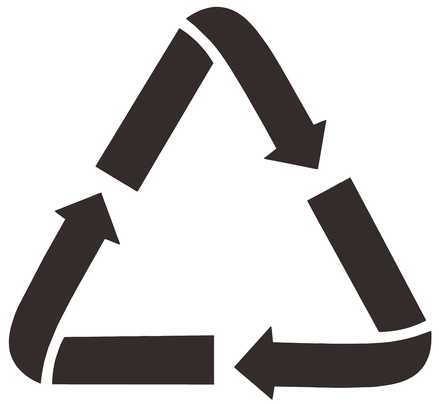

Recyclable garbage