# ASSEMBLY INSTRUCTIONS

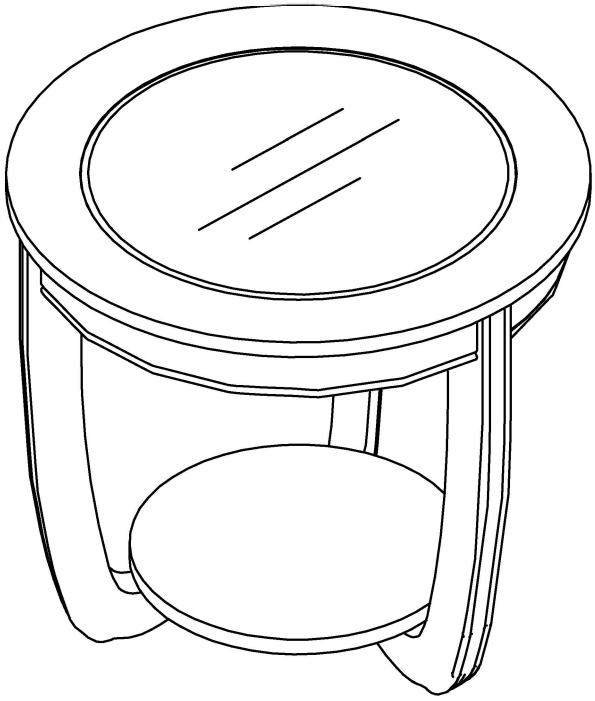

## TOOLS REQUIRED

Allen Wrench

(Included)

2 - People Recommended

## ASSEMBLY RATING

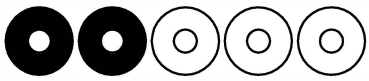

EASY ——→ DIFFICULT

The Assembly Rating is a 5-point system showing the level of effort needed to assemble a specific product.

## CHECK BEFORE STARTING

- [ ] **Are you missing anything?**

  Double-check all parts, hardware and accessories listed on Page 6 are accounted for.

- [ ] **Should we send any replacements?**

  Are there any irregularities or flaws in the parts? We can send replacements!

- [ ] **Check out our Quick Tips!**

  We recommend reviewing the pre-assembly handouts. Even experts need a refresher now and then!

- [ ] **Prep Time!**

  Please review the assembly instructions and all diagrams prior to assembling. Arrange parts as recommended on Page 7 and group identical hardware together to make assembling easier.

# PRE ASSEMBLY INTRODUCTION

We understand building ready-to-assemble furniture can be a challenging experience for some.  To help avoid confusion, we have provided some helpful tips that may speed up the process.

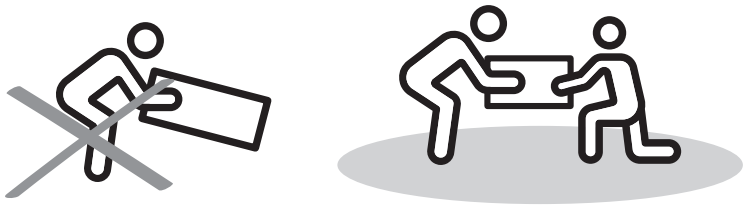

### Teamwork

ALWAYS have at least two people to help with transporting and assembling the product to avoid potential injury and/or damage.

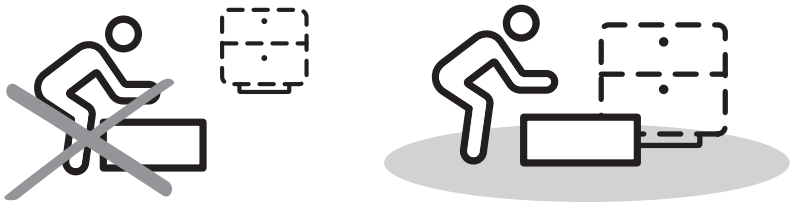

### Suitable Location

Assembling near the area of the intended location is highly recommended.

### Sufficient Space

Make sure you have enough space to move around during the assembly.

### Avoid Scratches

Use cardboard, blankets or a carpeted area while assembling furniture to prevent scratches.

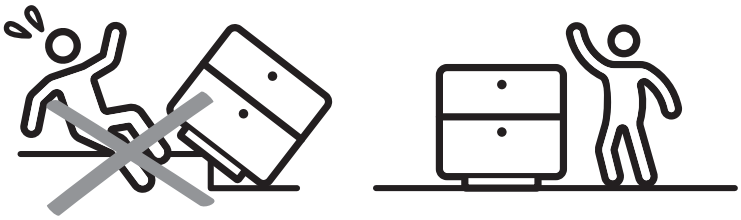

### Flat Surface

Make sure the furniture rests on a flat and level surface with each leg evenly touching the floor.

# ASSEMBLY AND CARE ADVICE

**FAILURE TO FOLLOW THE GUIDELINES BELOW MAY RESULT IN INJURY AND/OR PROPERTY DAMAGE.**

Position each part correctly and insert screws or bolts into their respective holes.

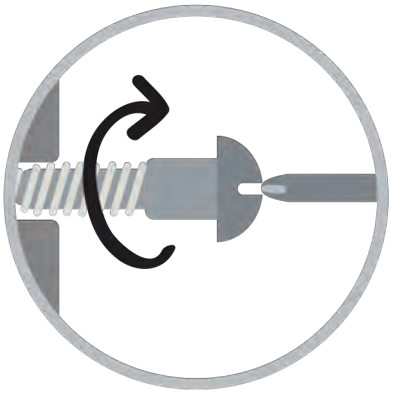

Turn clockwise to tighten and only tighten when step is completed or when instructed to do so.

Use the appropriate hand tools or power tools for assembly. Select steps, such as tightening screws and/or bolts, may require hand tools to avoid causing damage during assembly.

Save the instructions and store any supplied tools for later maintenance.

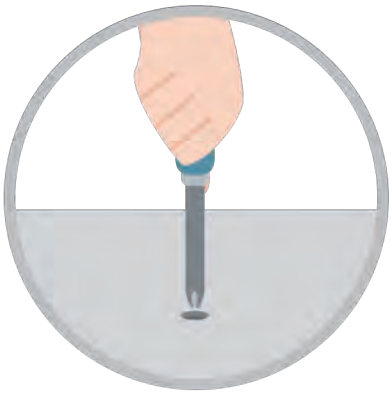

After two weeks, check and tighten any loose hardware and repeat again every six months thereafter.

**IT IS THE USER'S RESPONSIBILITY TO MAINTAIN THE FURNITURE. THE HARDWARE MAY LOOSEN OVER TIME AND MAY CAUSE THE FURNITURE TO BE WOBBLY AND UNABLE TO SUPPORT ITS INTENDED WEIGHT CAPACITY. THIS MAY LEAD TO COLLAPSE AND MAY CAUSE SERIOUS INJURY.**

# END TABLE

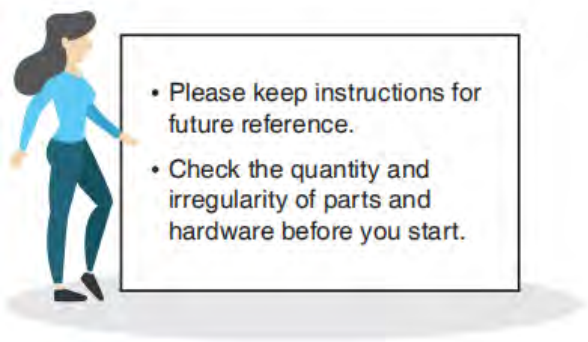


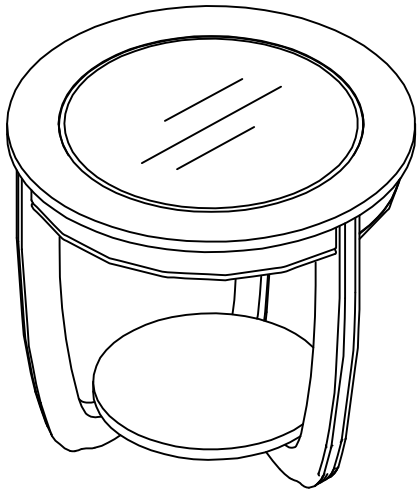

## PARTS

#1 1pc

Glass

#2 1pc

Top Frame

#3 3pcs

Feet

#4 1pc

Bottom Panel

## HARDWARE

#A 6pcs

Bolt Ø1/4"X5/8"

#B 6pcs

Bolt Ø1/4"X1"

#C 3pcs

Bolt Ø1/4"X1-1/2"

#D 9pcs

Lock Washer Ø1/4"

#E 9pcs

Flat Washer Ø1/4"X19mm

#F 1PC

Allen Wrench 4mm

#G 3PCS

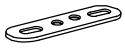

Metal Plate

# ASSEMBLY INSTRUCTIONS

## 1

Part #3 X3pcs

Hardware #B X6pcs

Hardware #G X3pcs

Hardware #F X1pc

Align metal plate (#G) to the feet (#3), then secure by using bolts (#B).

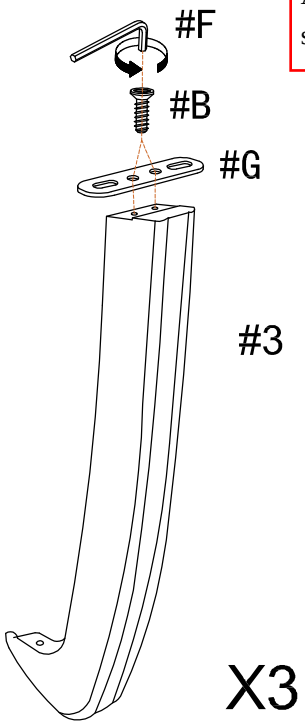


## 2

Part #2 X1pc

Part #4 X1pc

Hardware #A X6pcs

Hardware #C X3pcs

Hardware #D X9pcs

Hardware #E X9pcs

Hardware #F X1pc

Align feet (#3) to the top (#2) and bottom (#4). Secure the feet (#3) to the bottom (#4) by using bolts (#C) with washers (#D,E). Secure the feet (#3) to the top (#2) by using bolts (#A) with washers (#D,E).

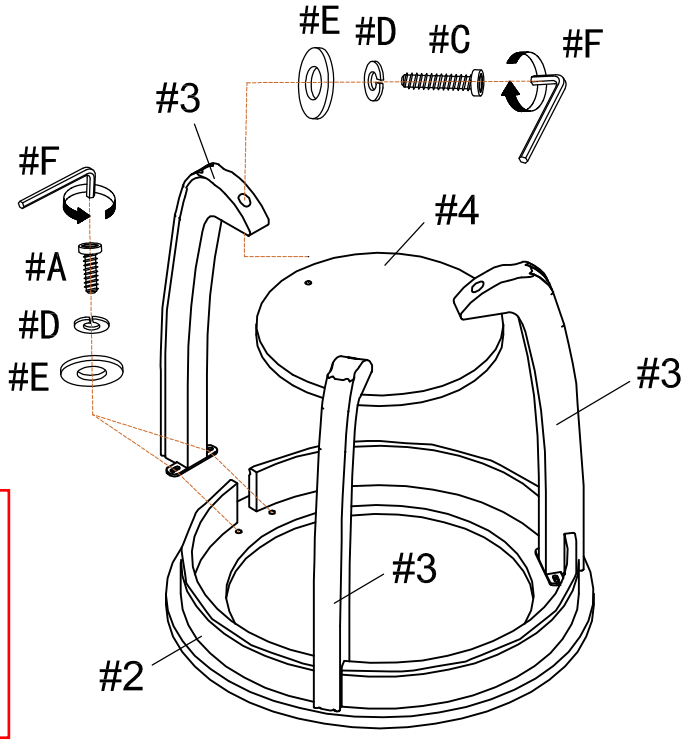

# ASSEMBLY INSTRUCTIONS

## 3

Part #1 X1pc

Carefully place glass (#1) onto the product.

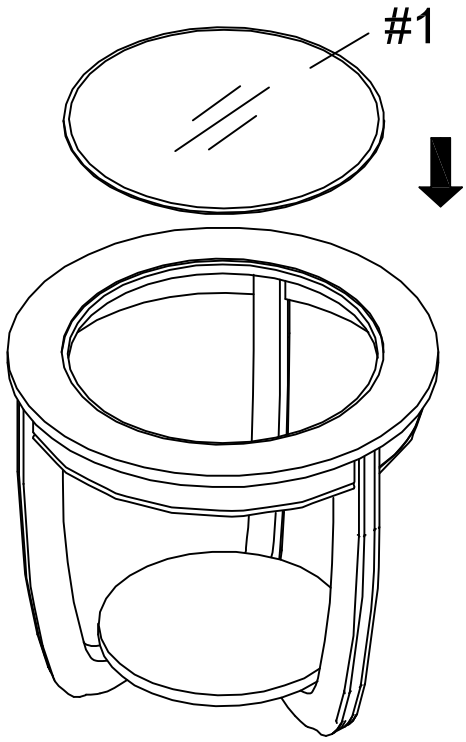


## 4

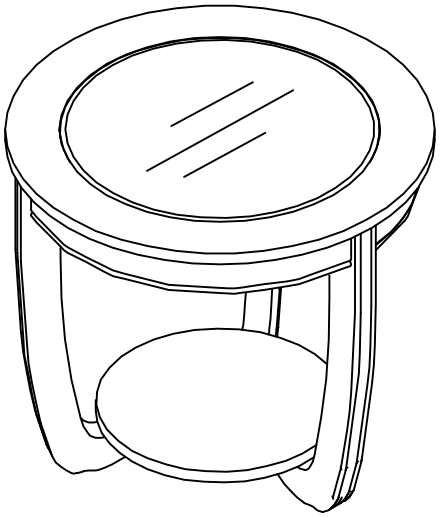

**ASSEMBLY COMPLETED**

Please ensure the furniture rests on an even and flat surface. If the product wobbles or feels loose, double-check all bolts and/or screws are properly tightened and secured.

**Keep this handy!**

Please retain this instruction manual and any order-related information for future reference.

**Lift, don't drag!**

To avoid damage to product please always LIFT the product when transporting of adjusting the placement.