ASSEMBLY INSTRUCTIONS

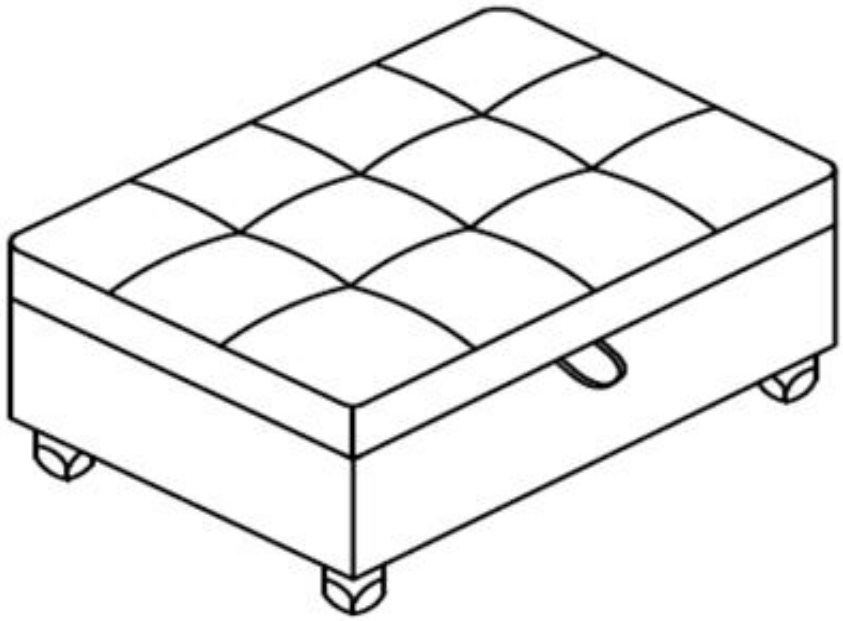

Storage Ottoman

ASSEMBLY INSTRUCTIONS

ASSEMBLY TIPS:

1.Remove hardware from box and sort by size.
2.Please check to see that all hardware and parts are present prior to start of assembly.
3.Please follow attached instruction in the same sequence as numbered to assure fast & easy assembly.



WARNING!

1.Don't attempt to repair or modify parts that are broken or defective. Please contact the store immediately.
2.This product is for home use only and not intended for commercial establishment.

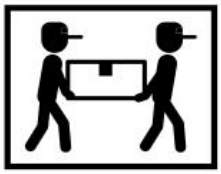

ASSEMBLY TIME	15 MINUTES

PARTS IDENTIFICATION

A	OTTOMAN FRAME	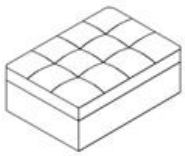	1PC	B	LEG		4PCS

ASSEMBLY INSTRUCTIONS

STEP 1

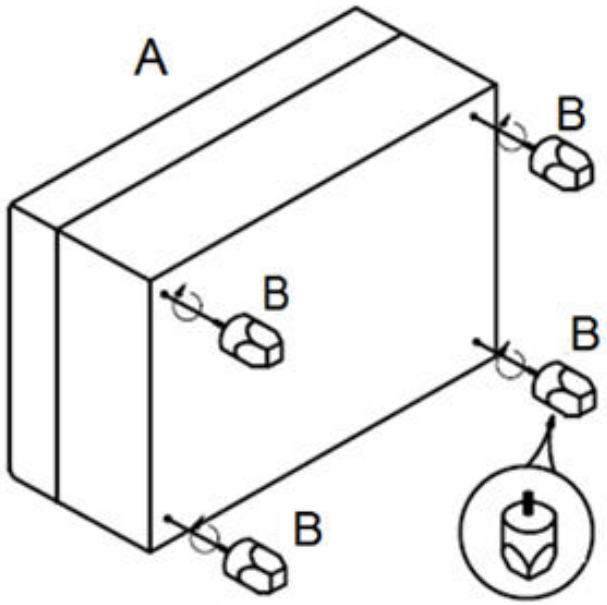

STEP 2

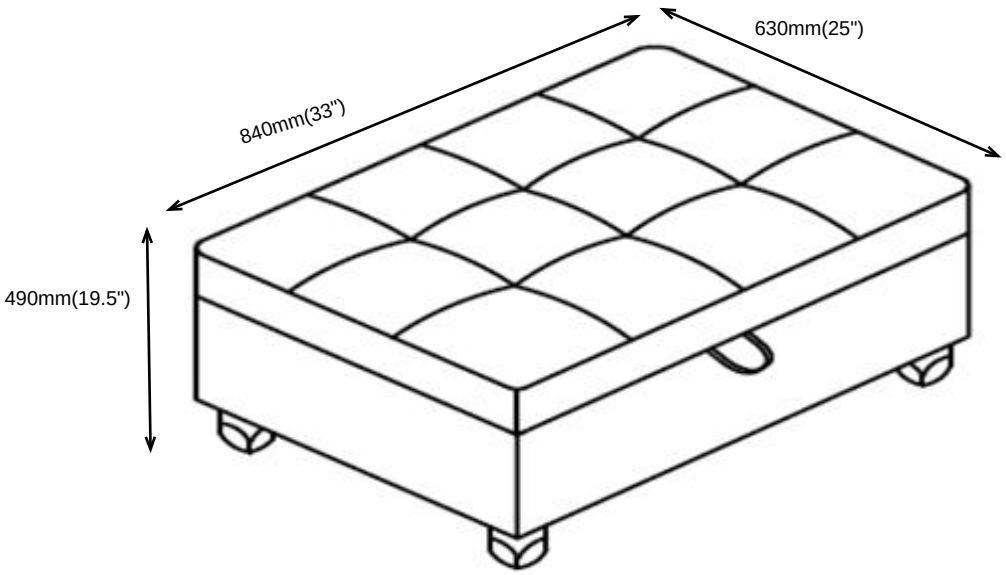

Note : Dimension tolerance ±5%

