Installation Instruction

Please don't tighten the screws completely and go back later for a final tightening of all the screws after pieces are aligned with each other.

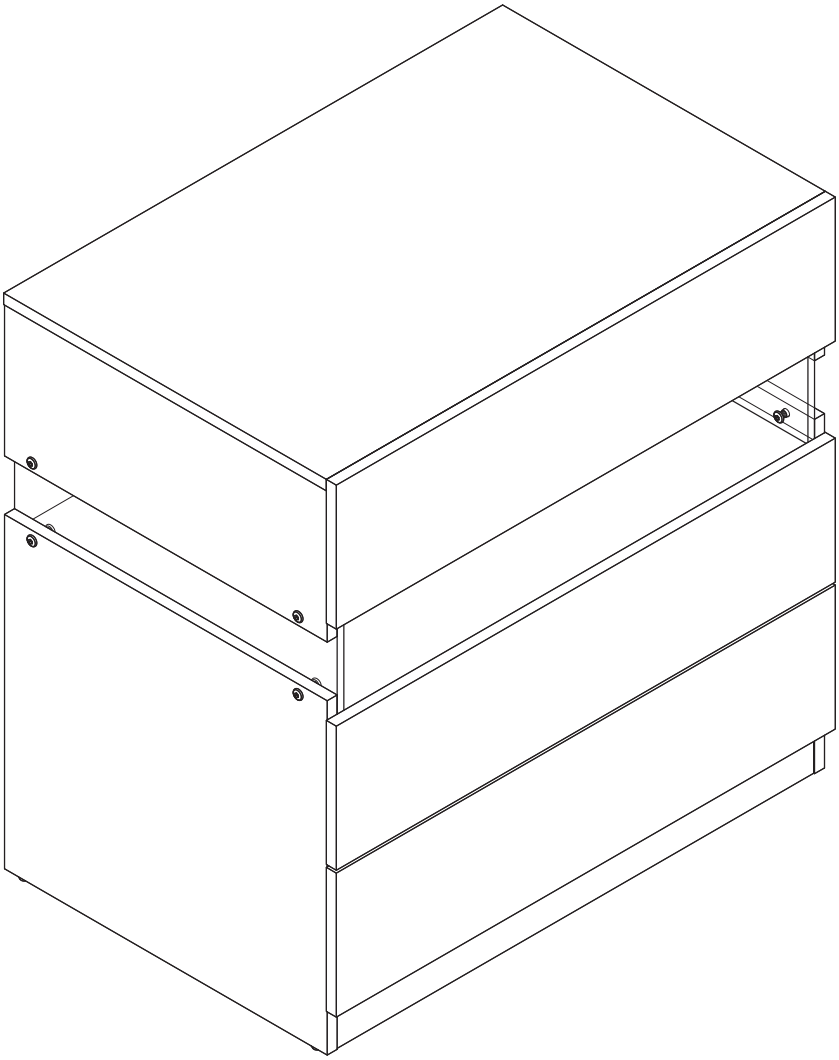

MADE IN CHINA

PARTS LIST

1 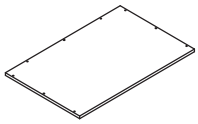 1PC	2 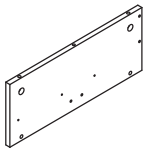 1PC	3 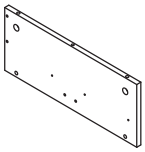 1PC	4 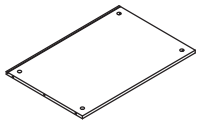 1PC
5 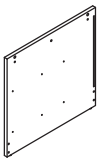 1PC	6 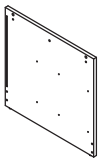 1PC	7 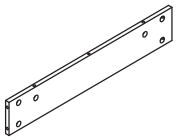 1PC	8 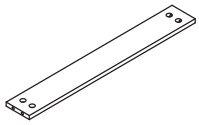 1PC
9 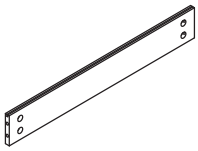 1PC	10 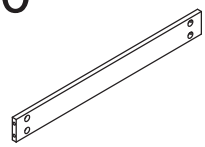 1PC	11 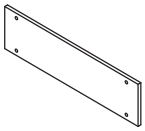 2PCS	12 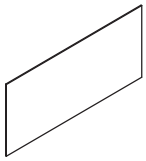 1PC
13 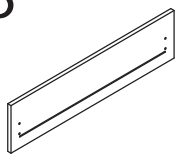 2PCS	14 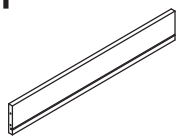 3PCS	15 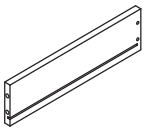 3PCS	16 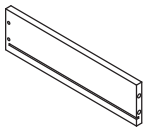 3PCS
17 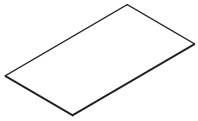 3PCS	18 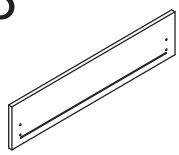 1PC		

HARDWARE LIST

A Ø4x40mm 12PCS	B M6x35mm 38+2PCS	C 38+2PCS	D Ø6x20mm 5PCS
E E_1 E_2 M5x18mm 8SETS	F F_1 F_2 1SET	G Ø3.5x12mm 36PCS	H CR DR DL CL L: 250mm 3SETS
I I_1 I_2 Ø3x12mm 3SETS	J 1PC	K 1PC	L 1PC

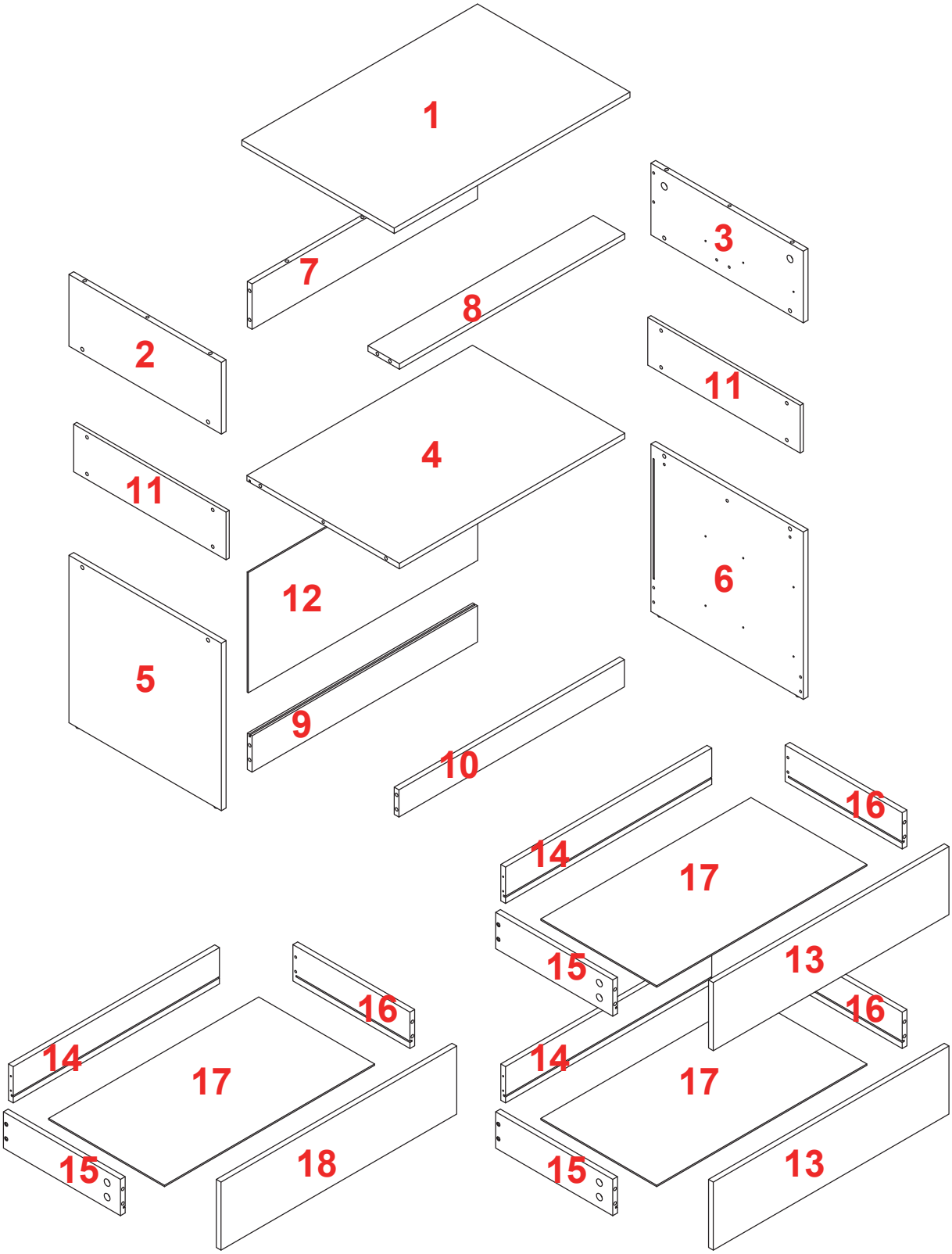
1
7
8
3
2
11
4
11
12
6
5
9
10
16
14
17
15
13
16
14
17
15
18
16
14
17
15
13

1

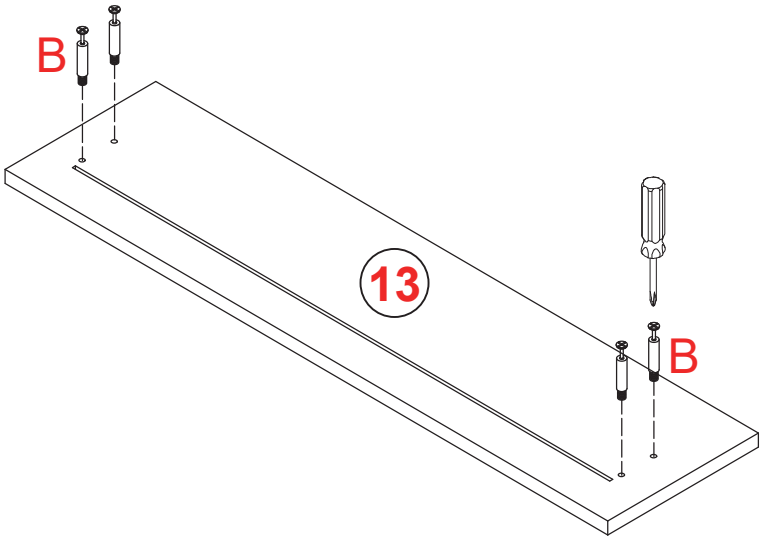

x2

2

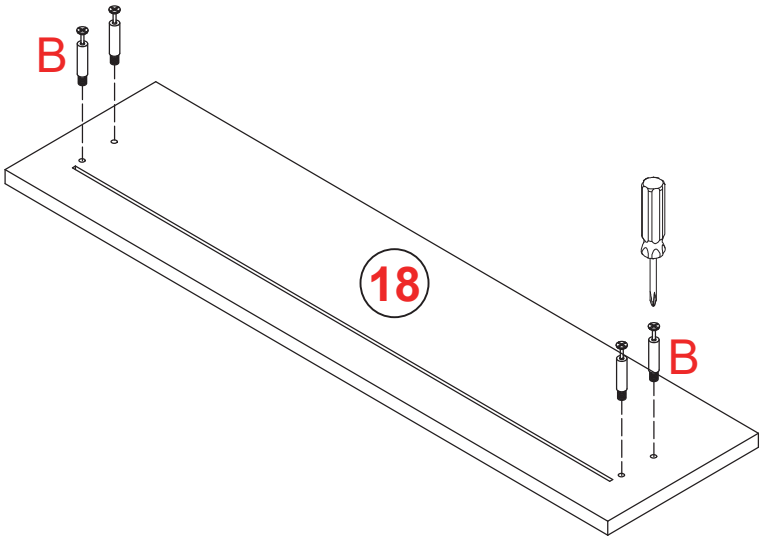

3

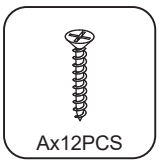
Ax12PCS

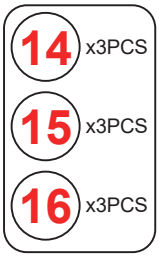
14 x3PCS
15 x3PCS
16 x3PCS

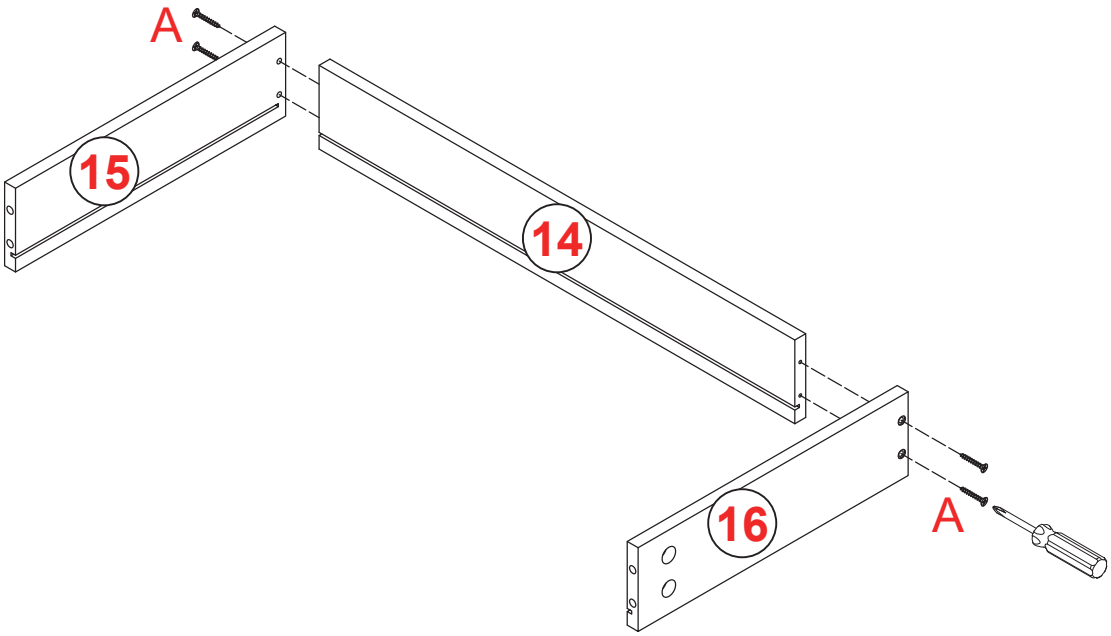
A
15
14
16
A

x3

4

17 x3PCS

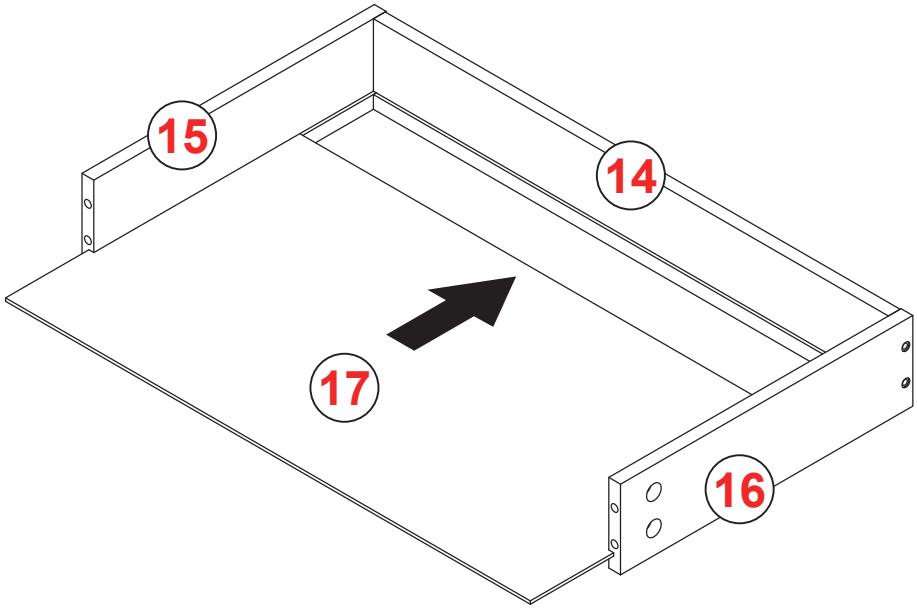
15
14
17
16

x3

5

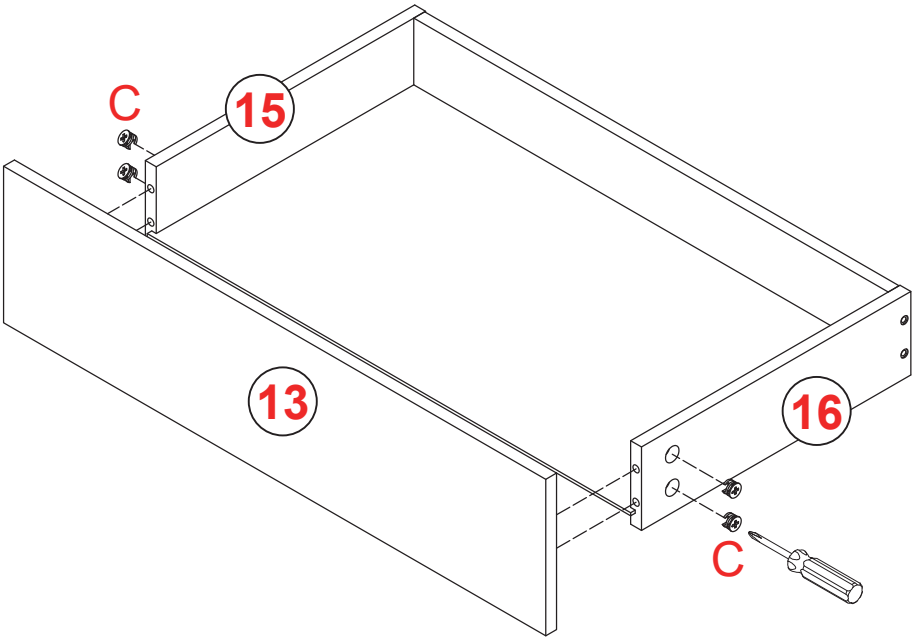

x2

6

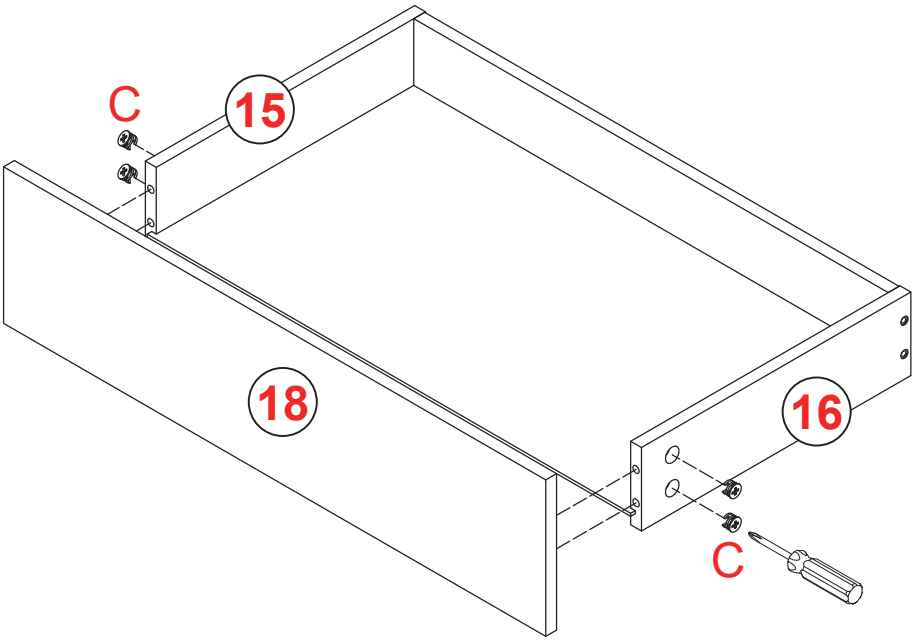

7

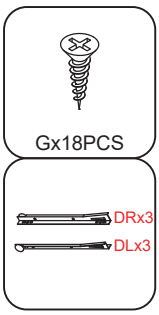

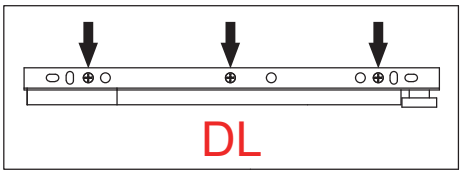

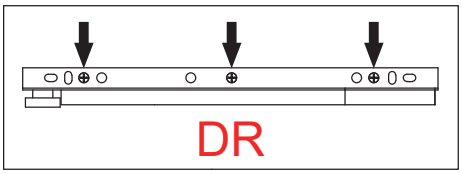

Important reminder: Please assemble the G screw according to the hole indicated by the arrow.

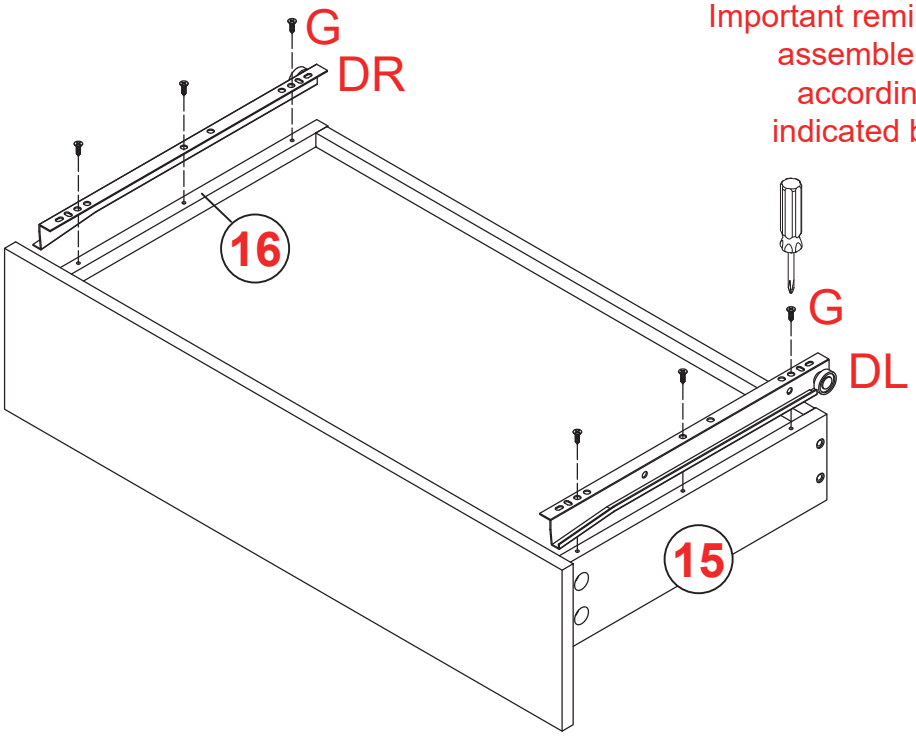

x3

8

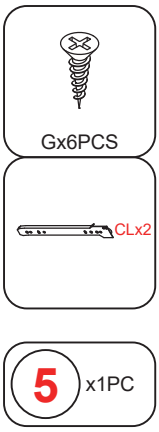

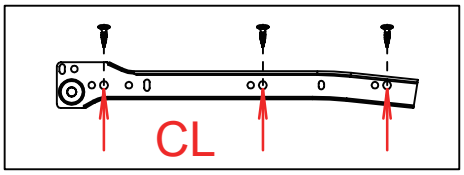

Important reminder: Please assemble the G screw according to the hole indicated by the arrow.

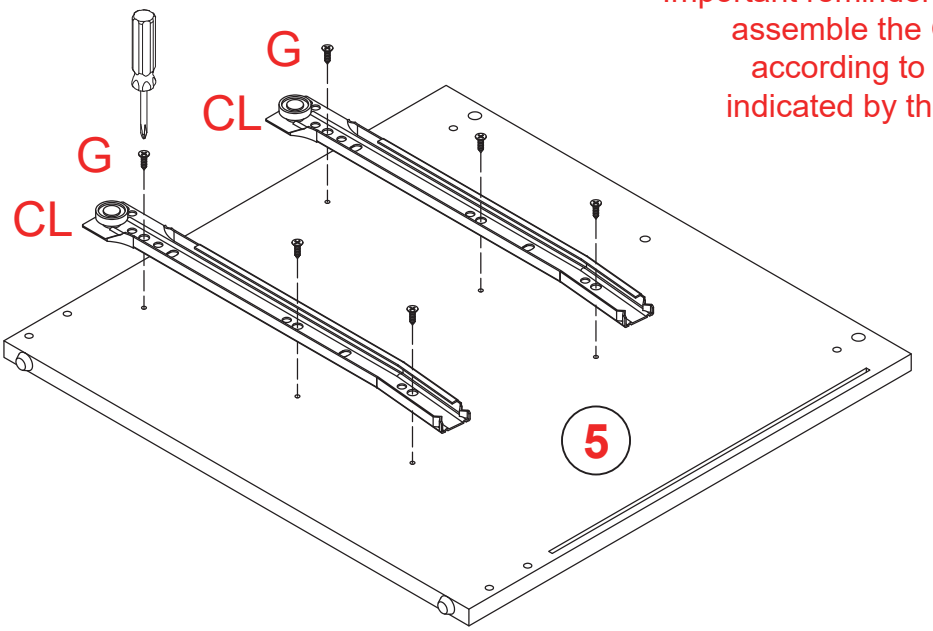

9

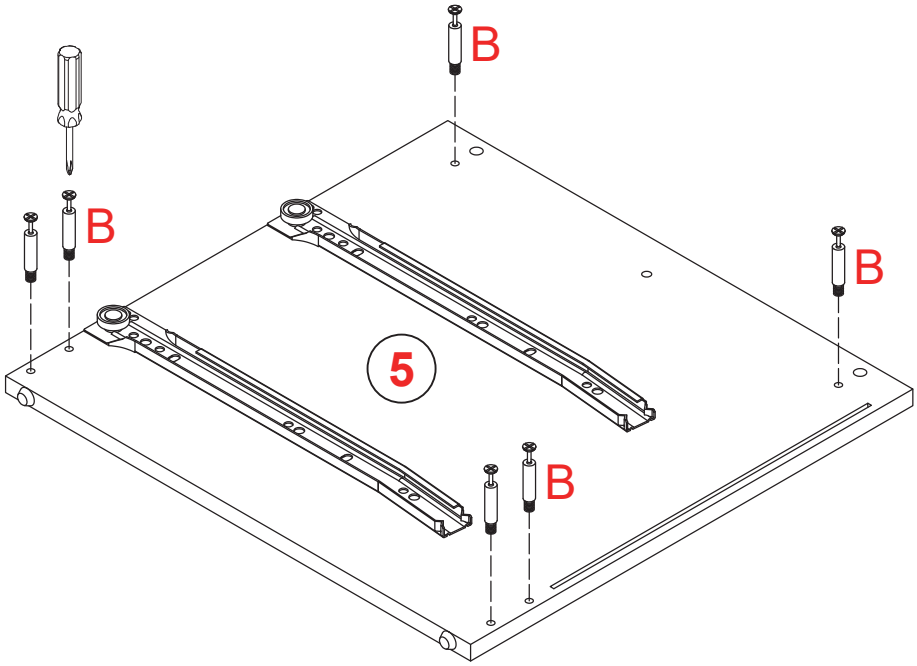

10

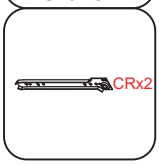

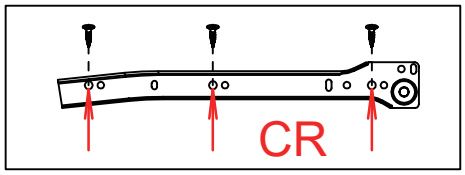

Important reminder: Please assemble the G screw according to the hole indicated by the arrow.

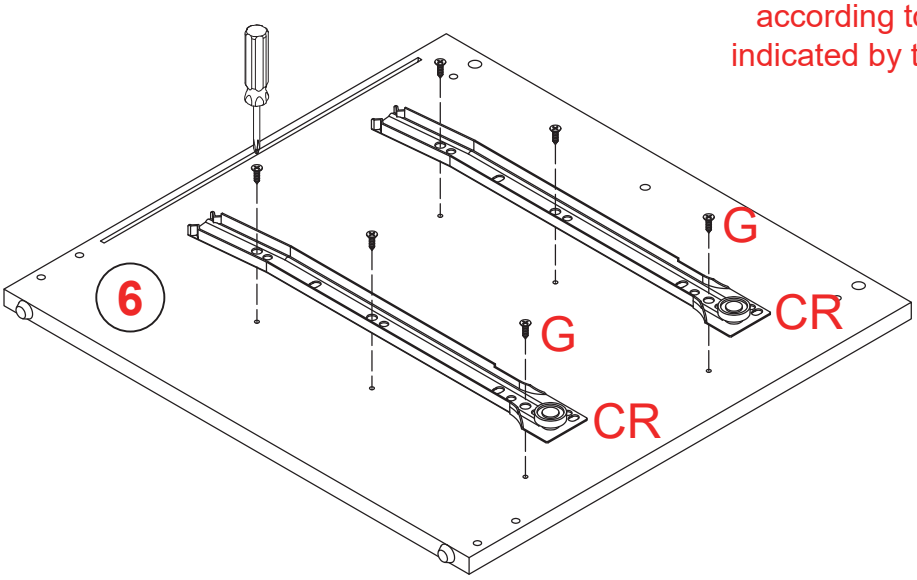

11

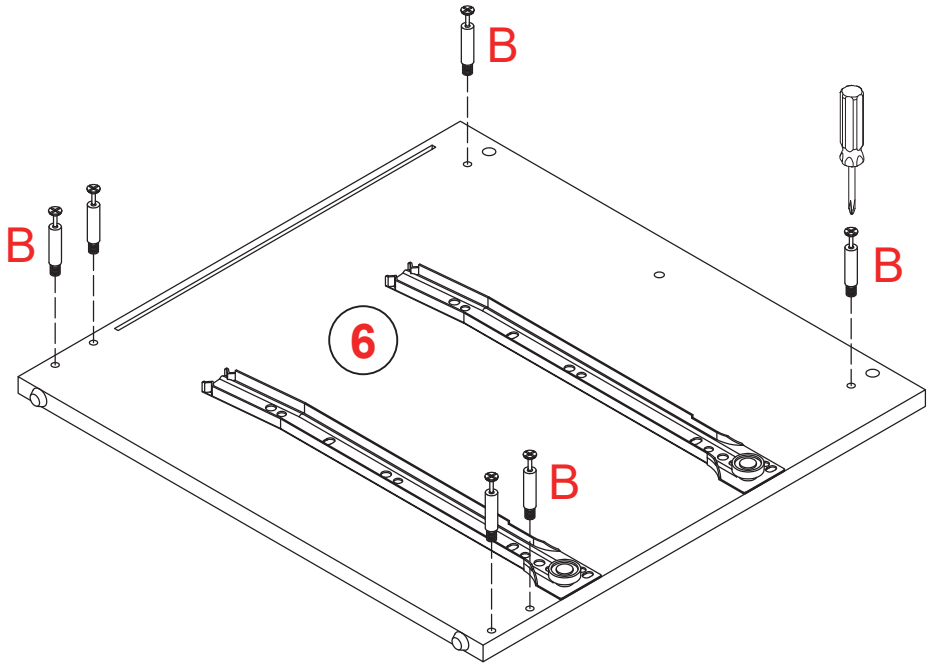

12

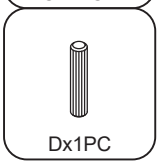

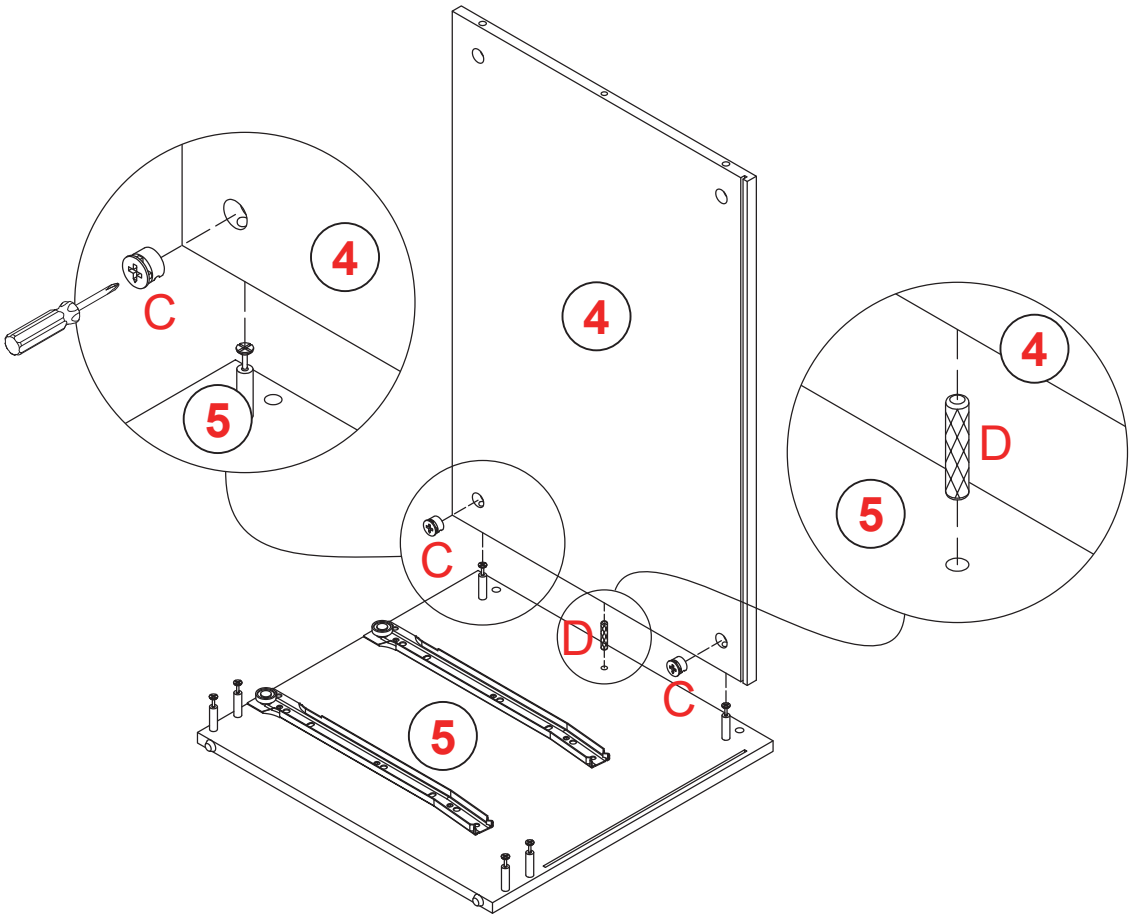

13

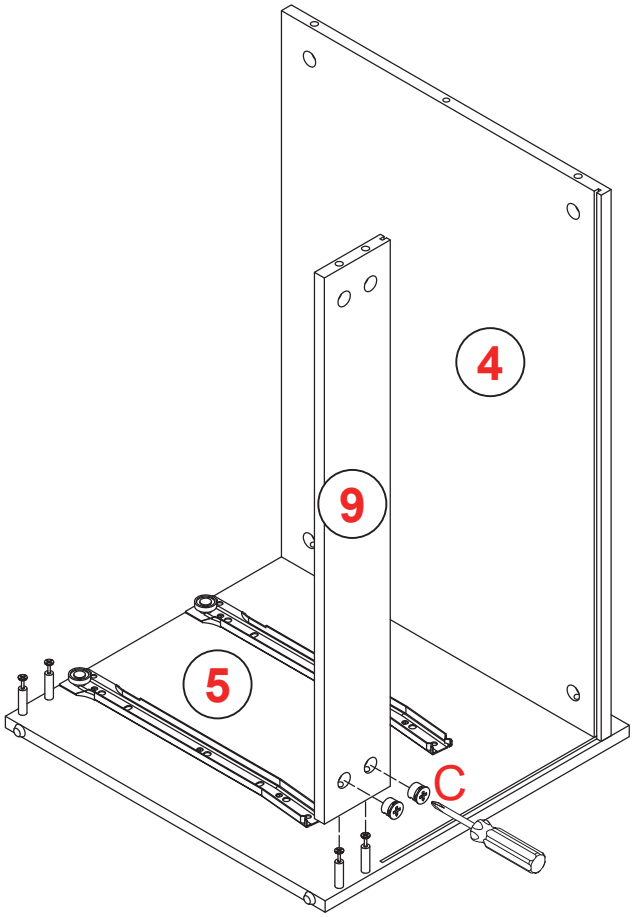

14

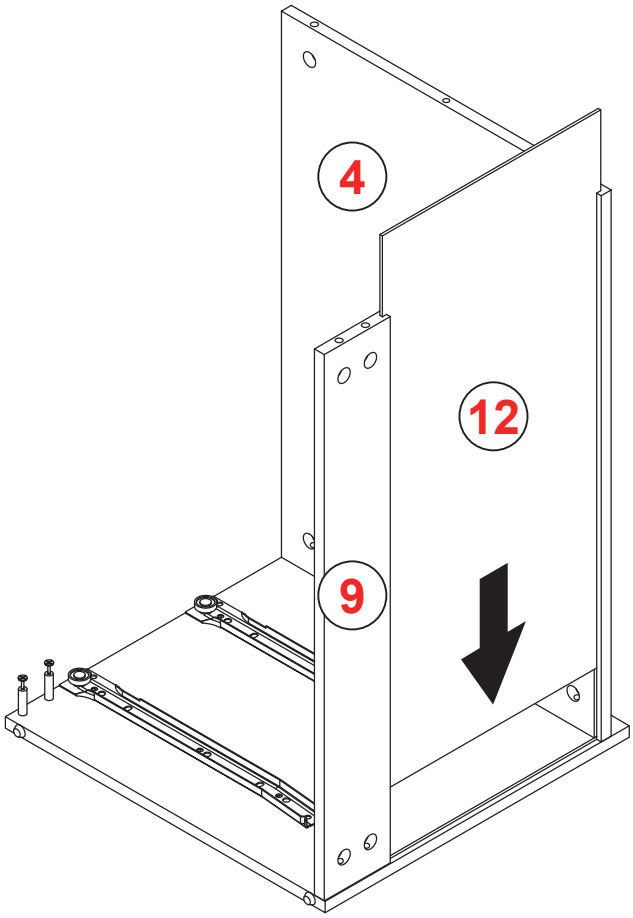

15

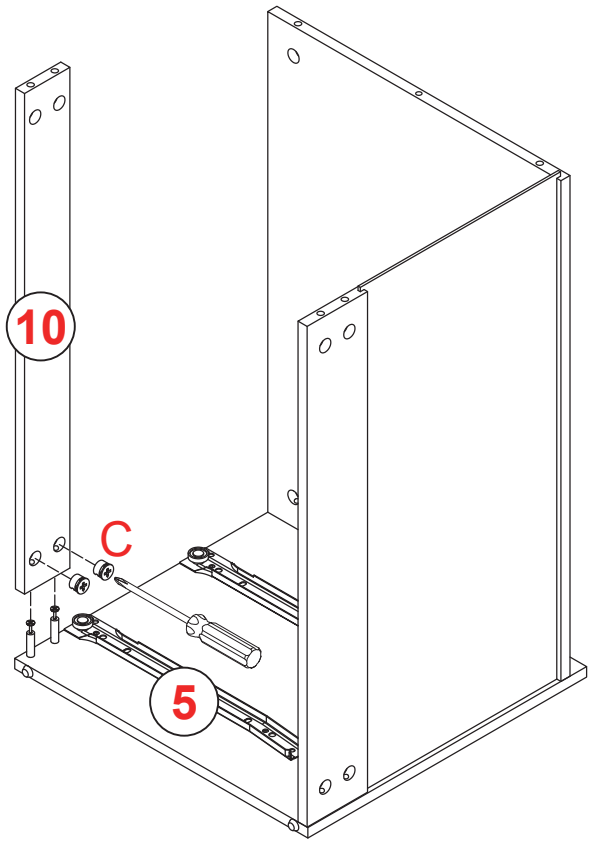

16

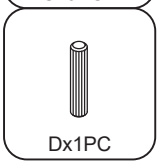

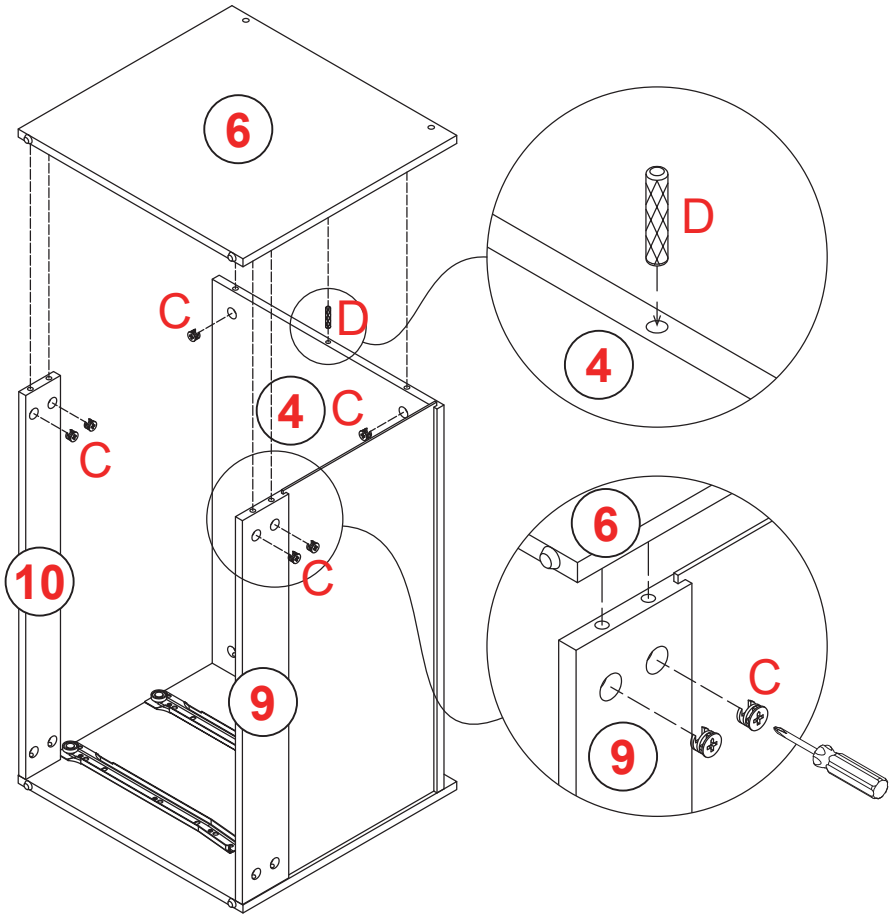

17

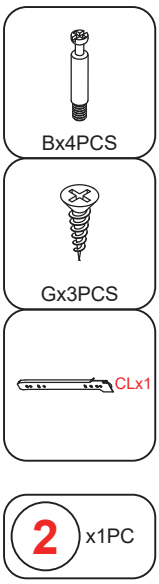

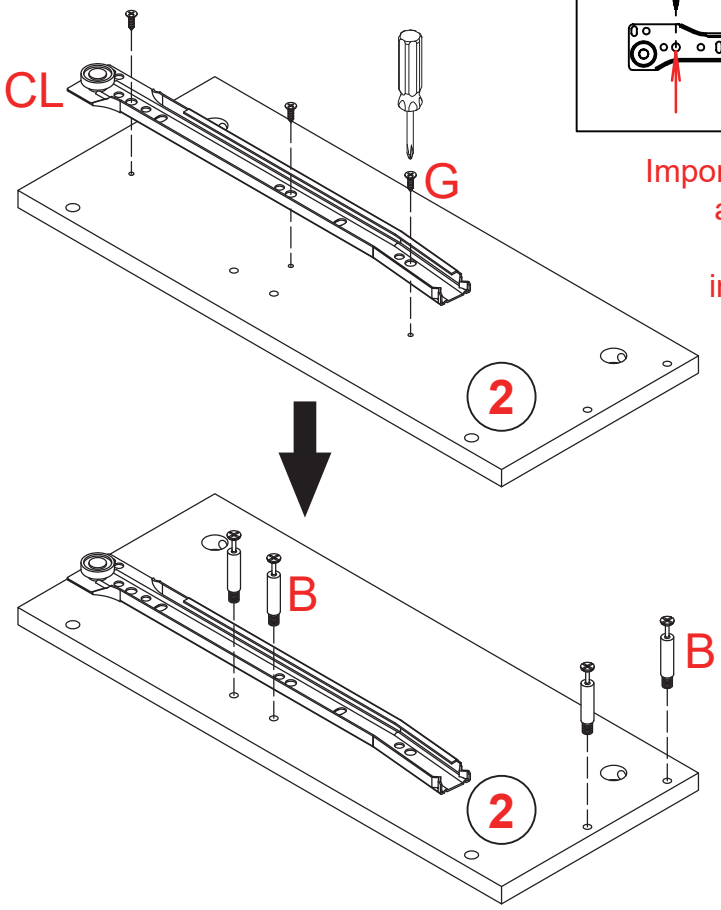

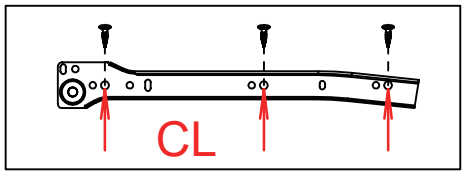

Important reminder: Please assemble the G screw according to the hole indicated by the arrow.

18

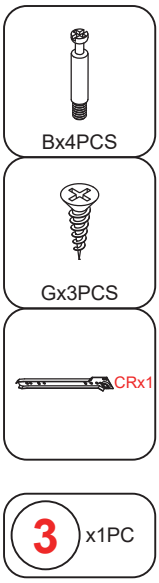

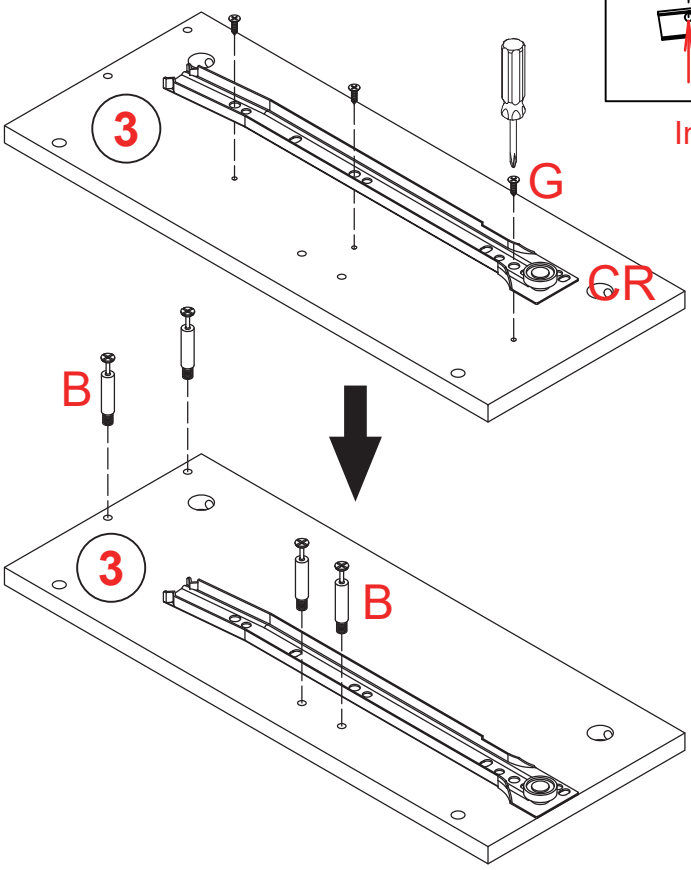

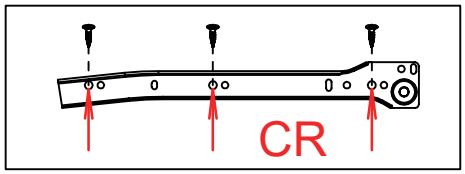

Important reminder: Please assemble the G screw according to the hole indicated by the arrow.

19

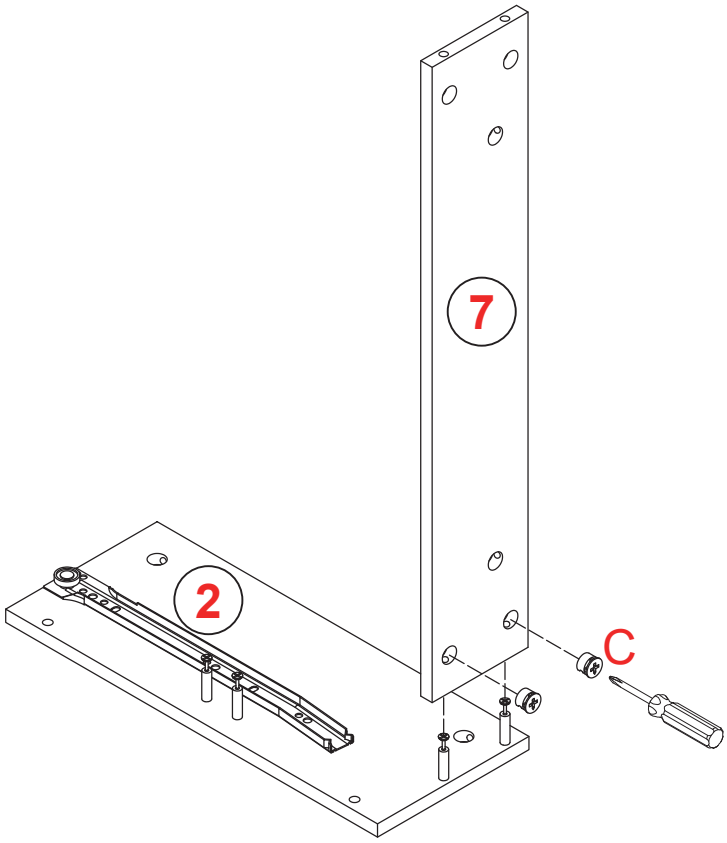

20

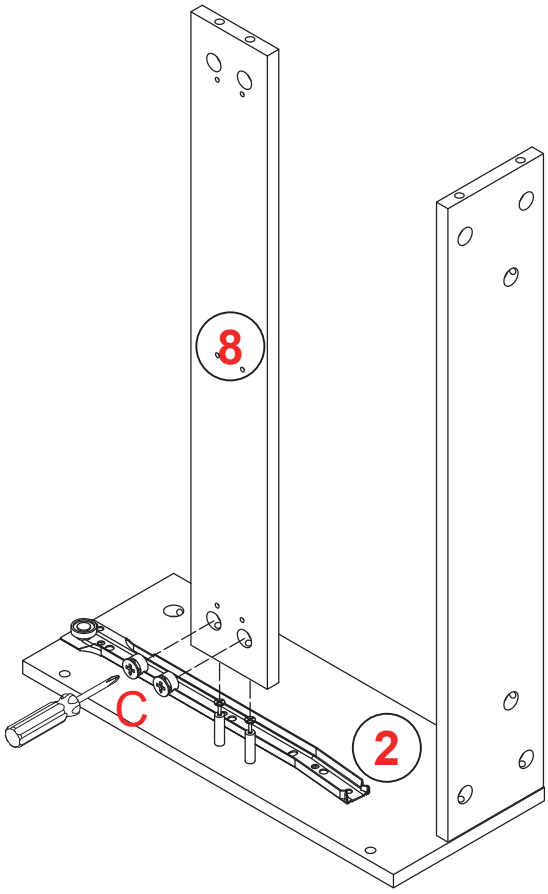

21

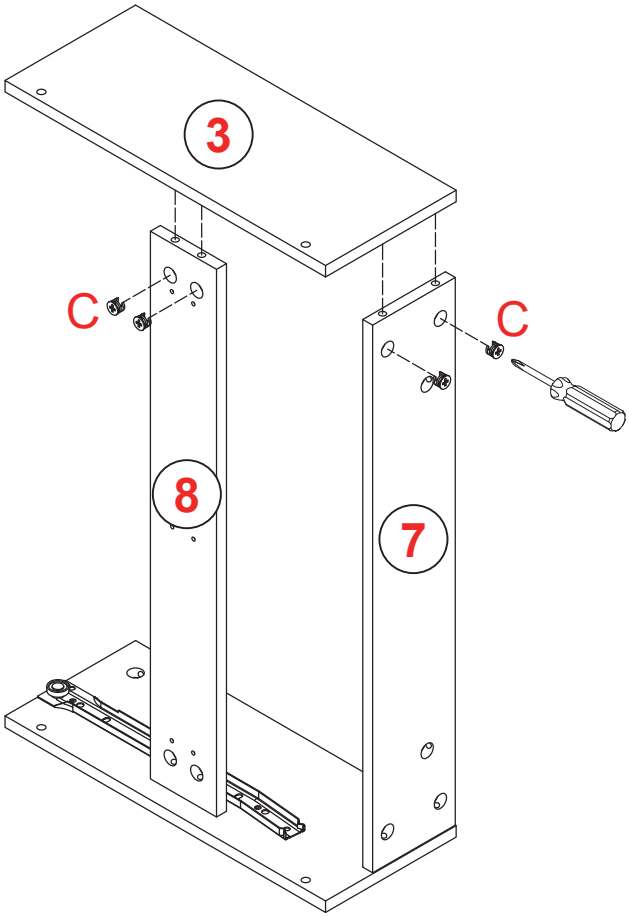

22

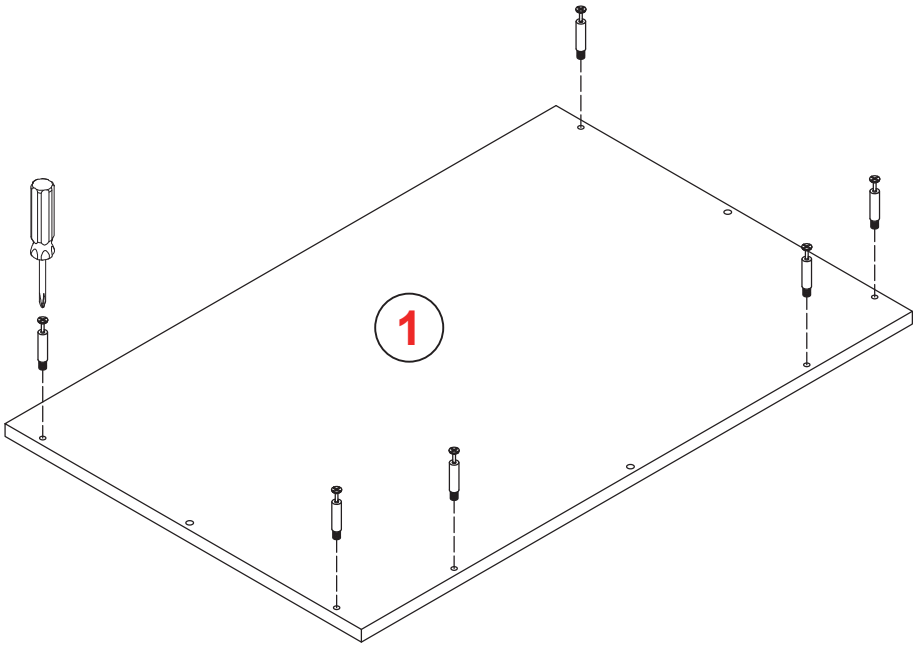

23

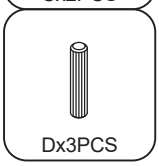

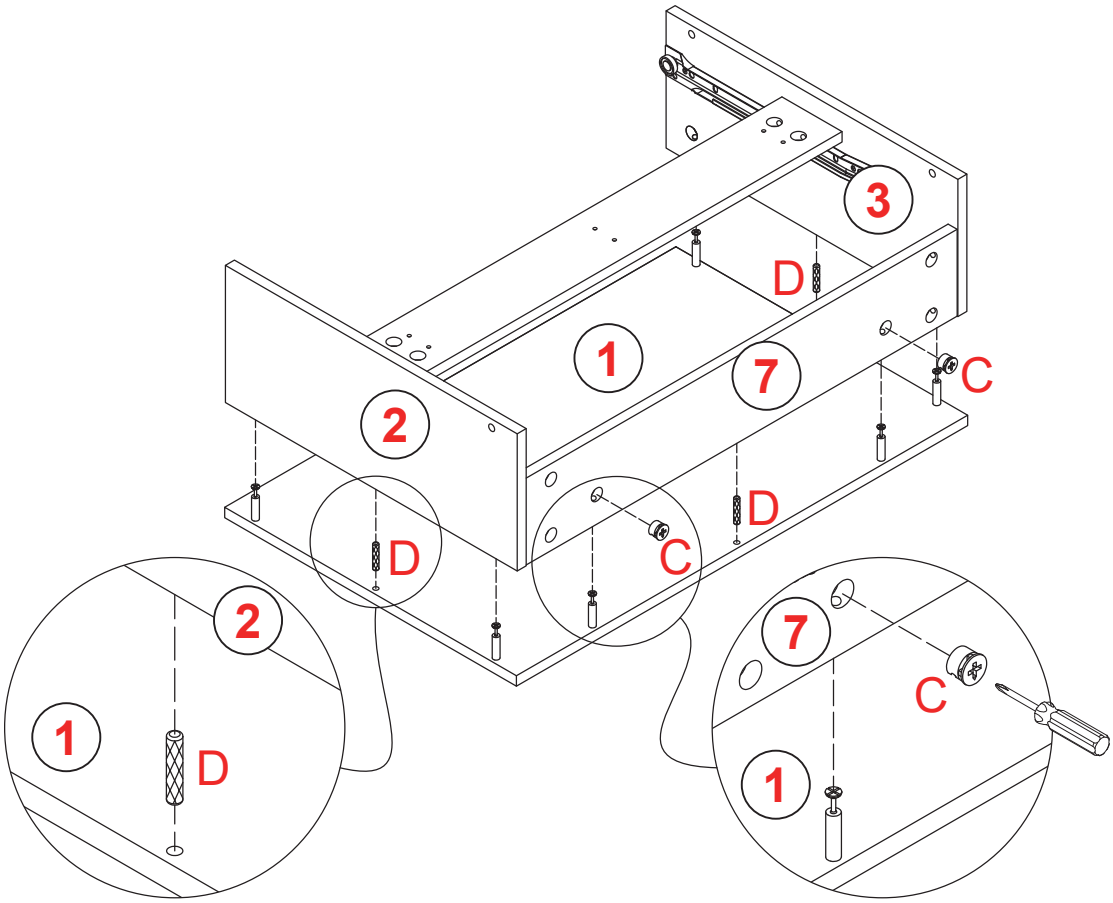

24

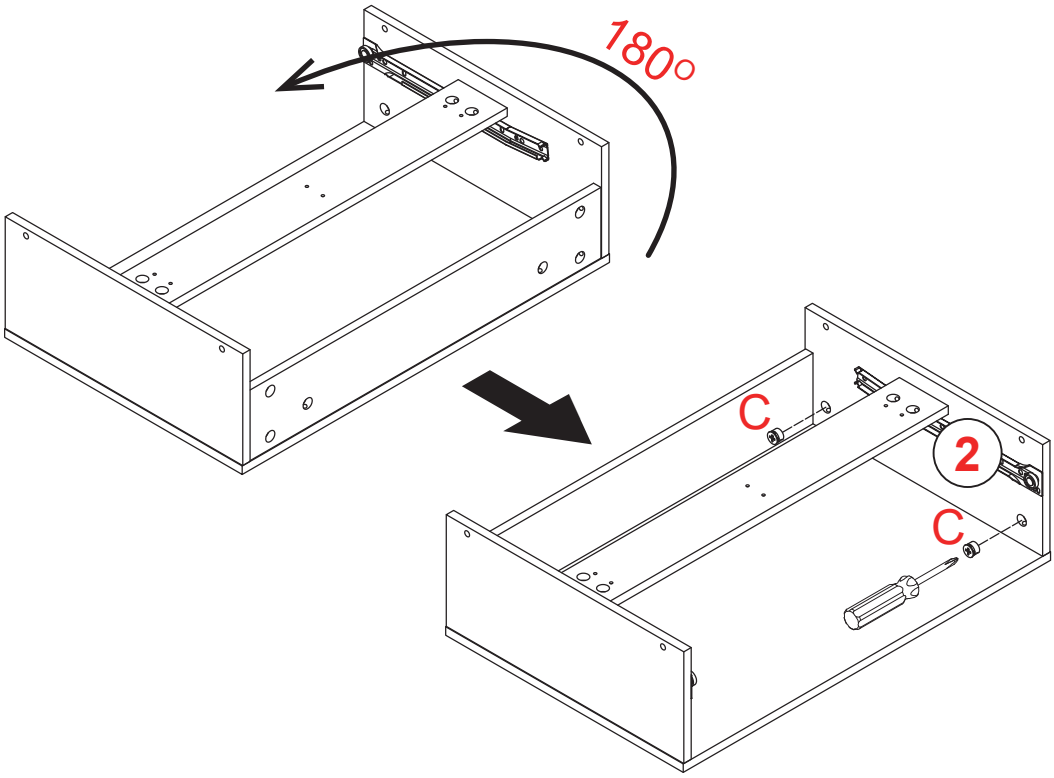

25

Cx2PCS

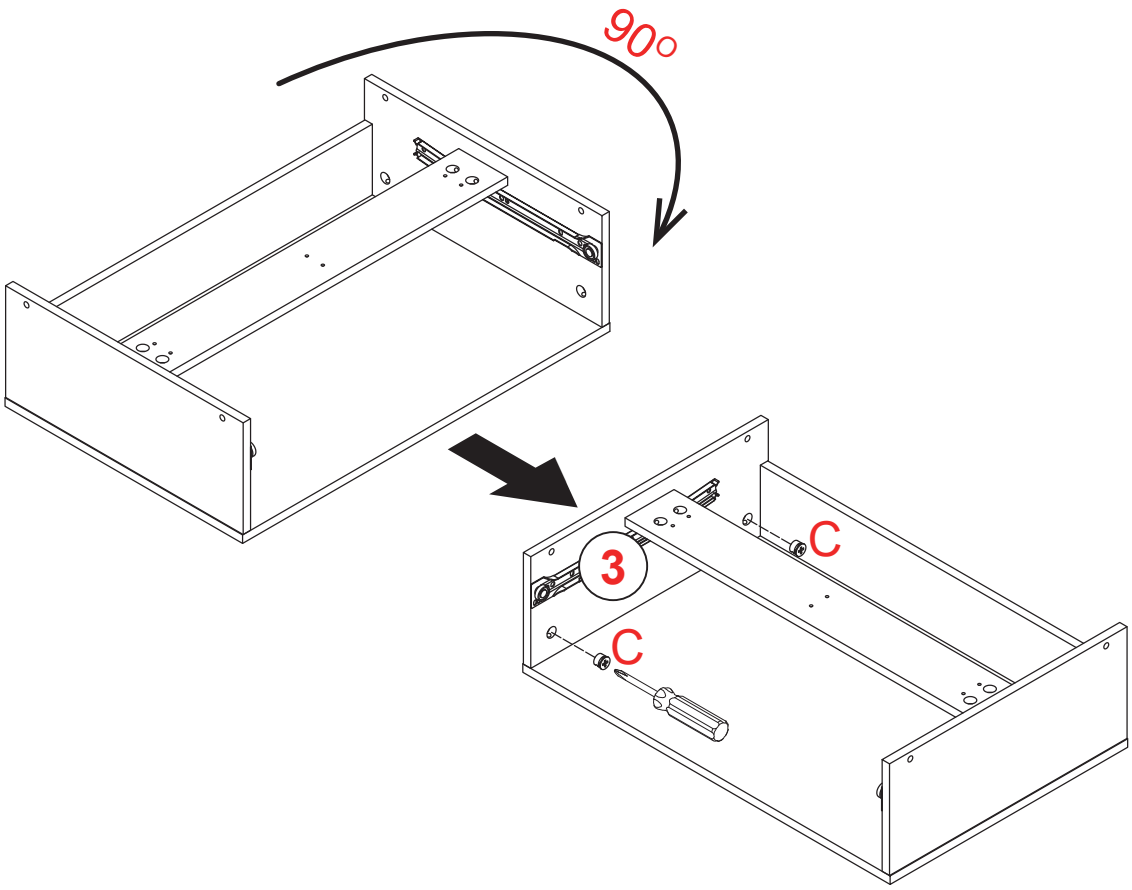
90o
3
C
C

26

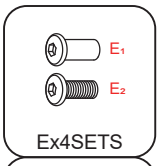
E1
E2
Ex4SETS

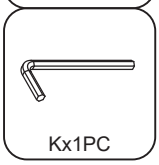
Kx1PC

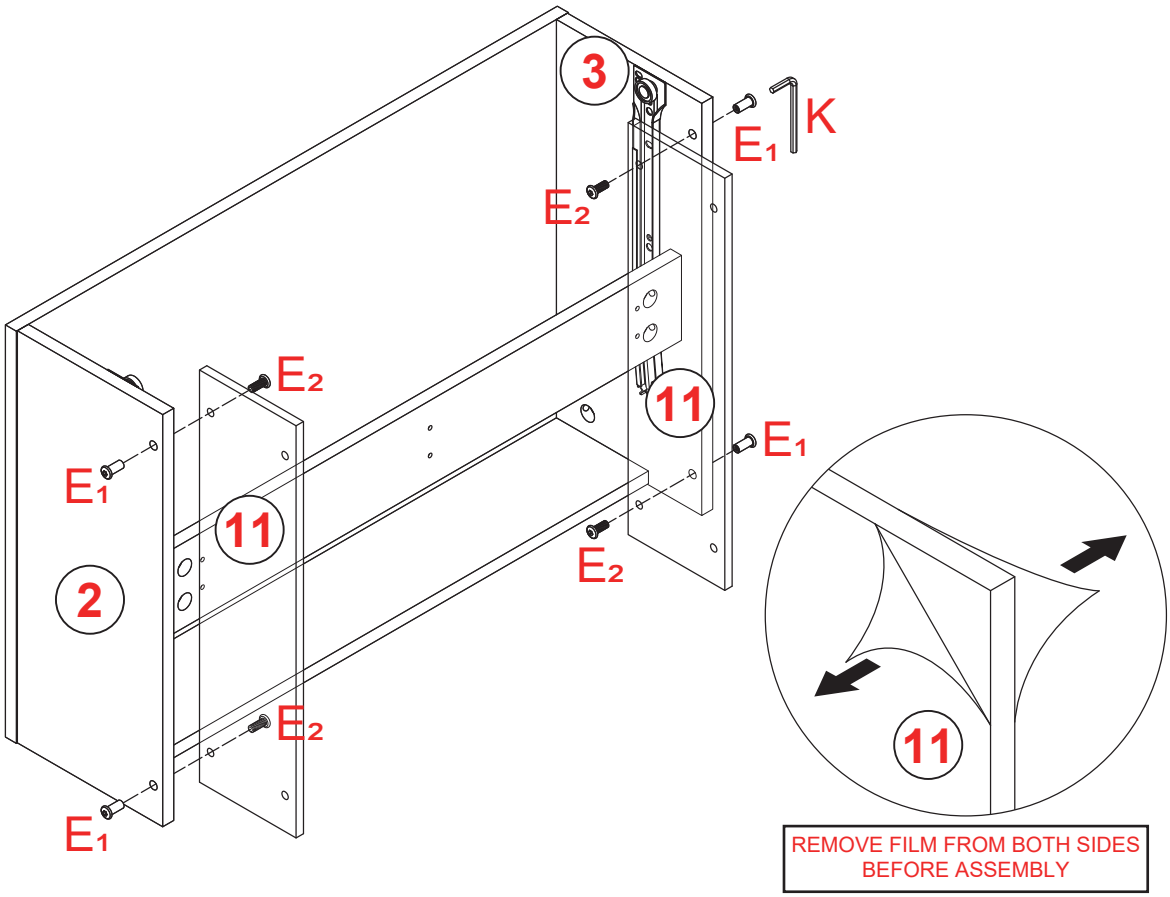
3
K
E1
E2
E2
11
E1
E1
11
2
E2
E2
E1
11
REMOVE FILM FROM BOTH SIDES
BEFORE ASSEMBLY

27

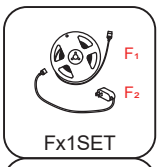

Fx1SET

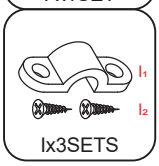

Ix3SETS

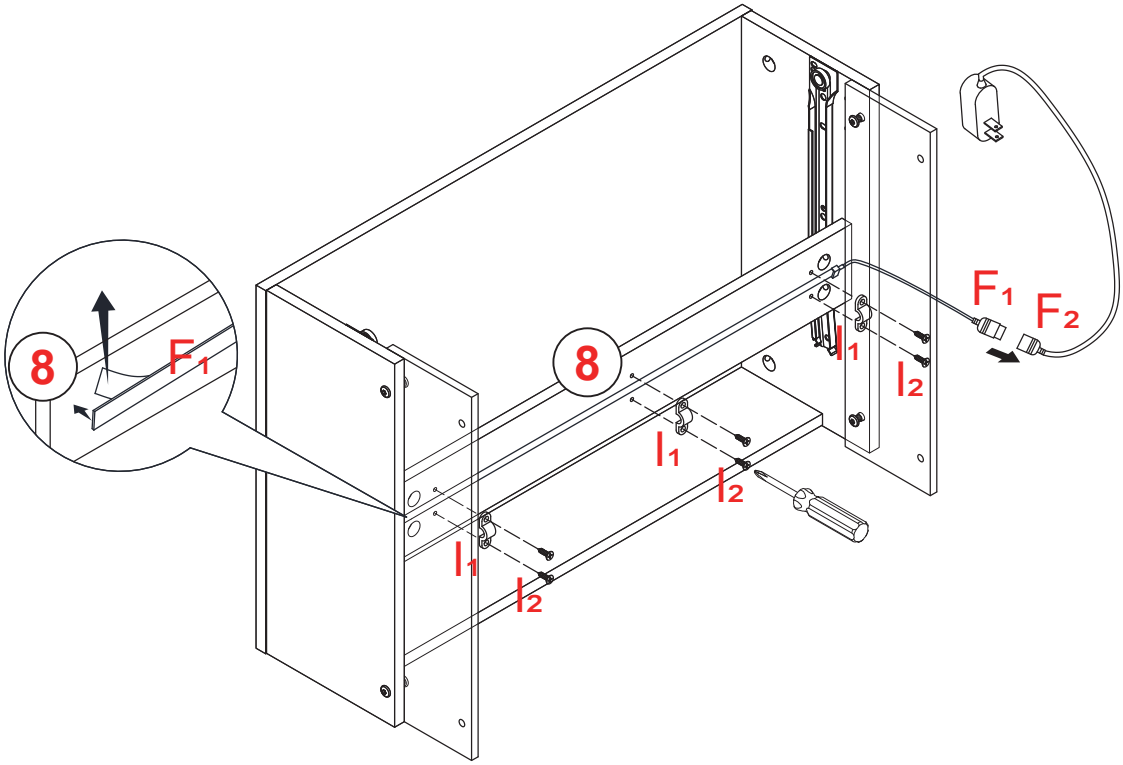

28

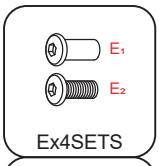

Ex4SETS

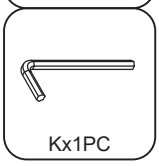

Kx1PC

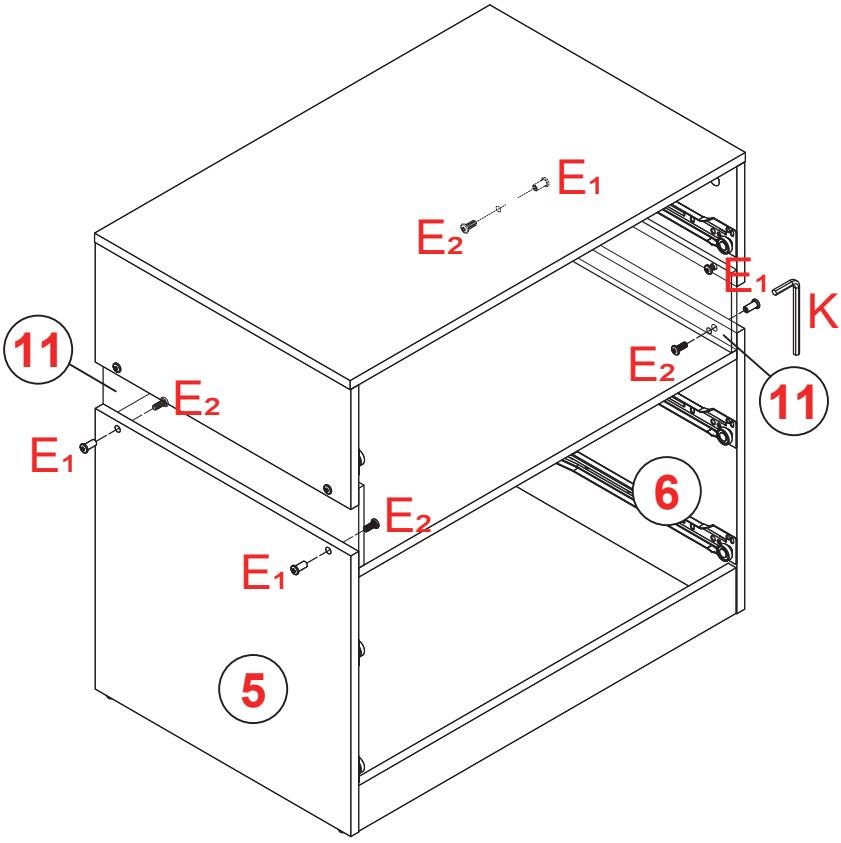

29

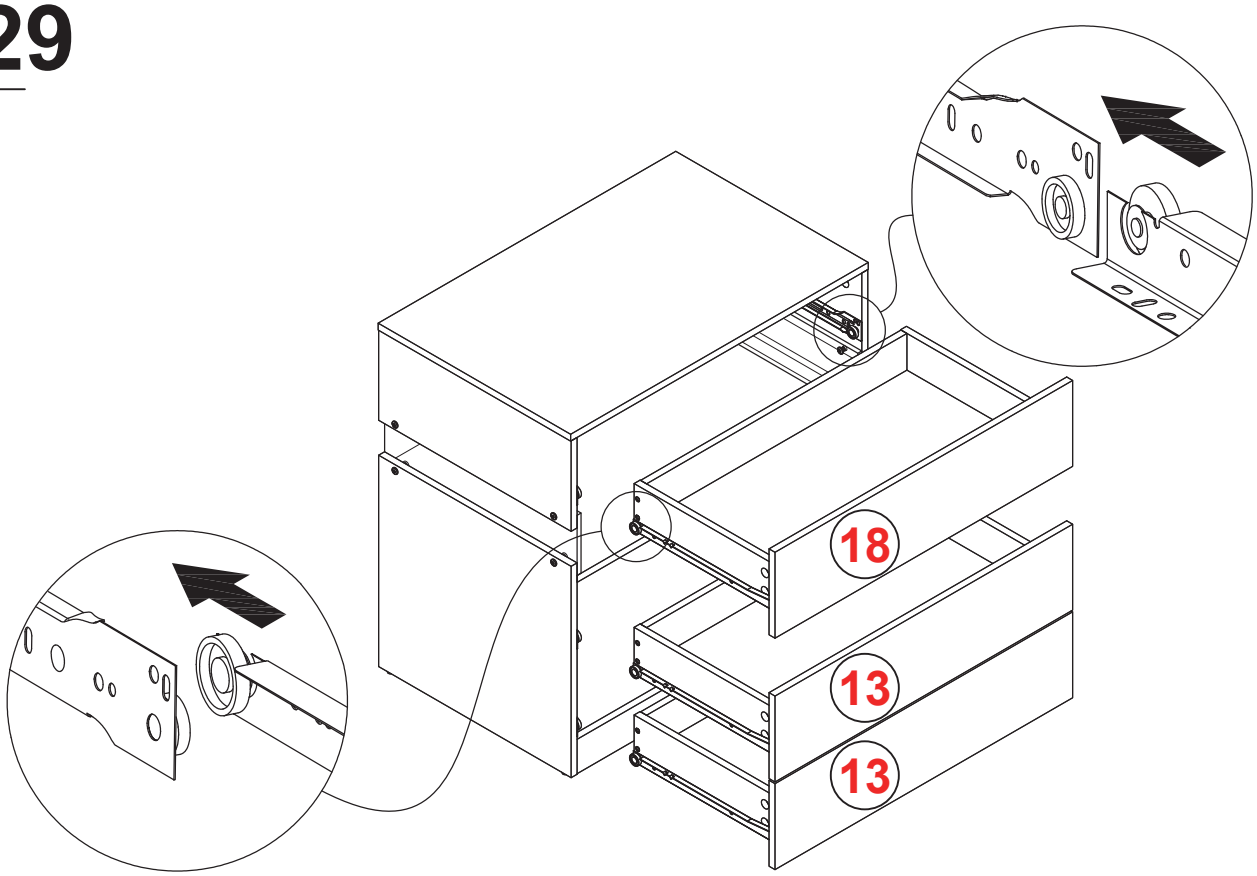
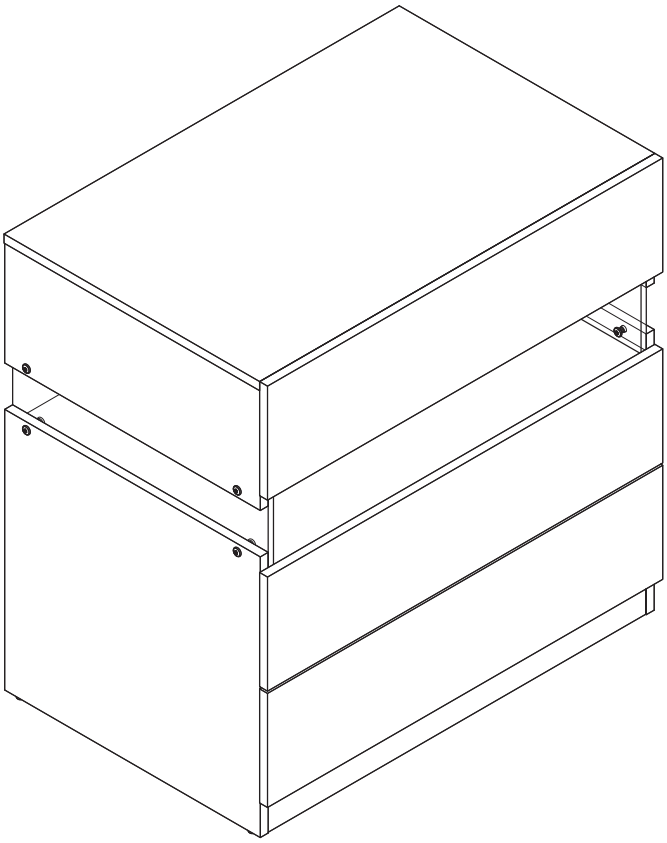
30