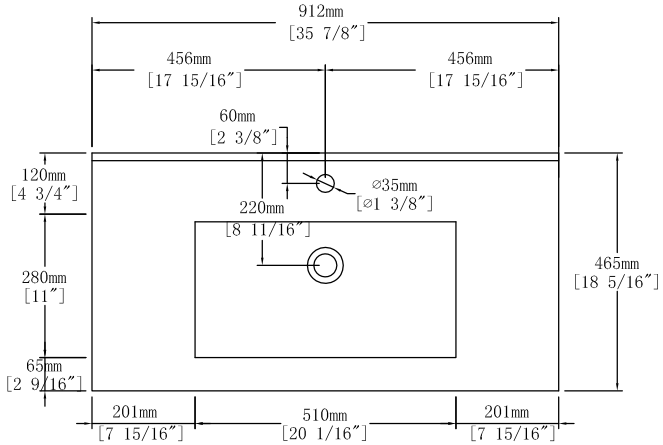

Top View

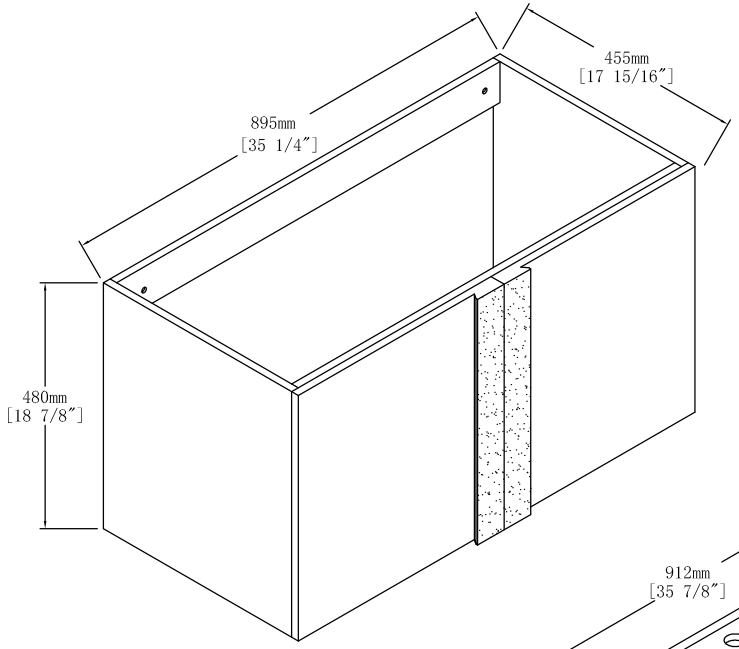

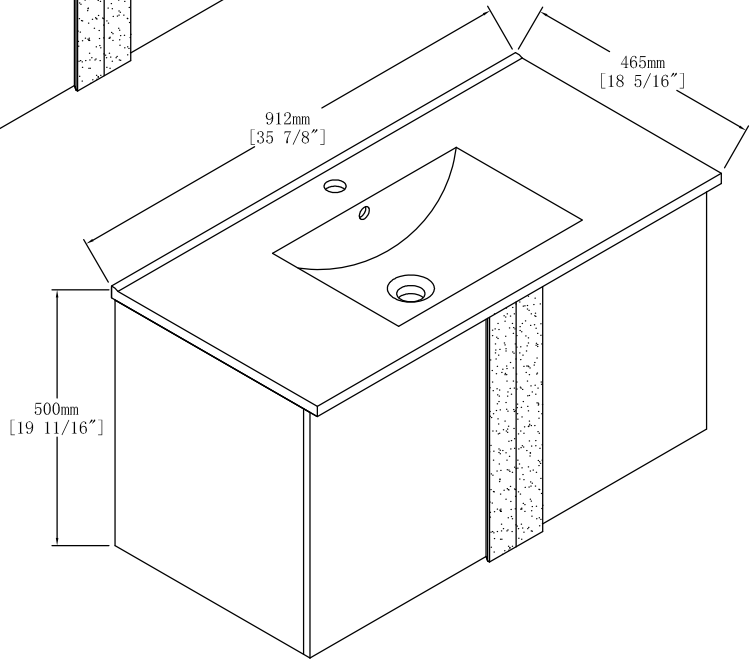

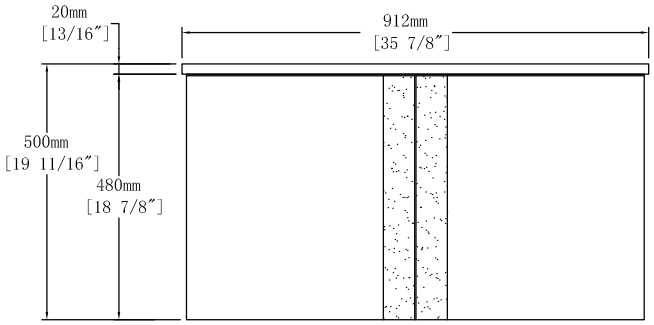

Front View

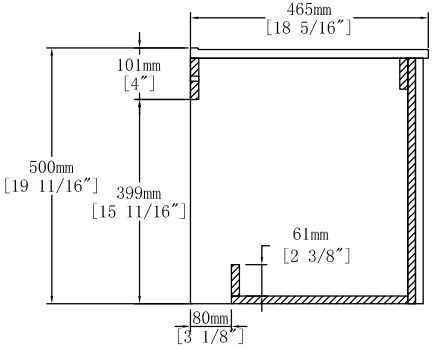

Side View

Item NO.	UNOR VB 004 36	Version	V1
Project		Date	2025-11-11