Ax1	Bx1	Cx1	Dx1
Ex1	Gx1	Hx1	Nx1 12mm	Fx2
Ix1	Jx1 M27	Kx2 M12	Mx1 M6	Lx2

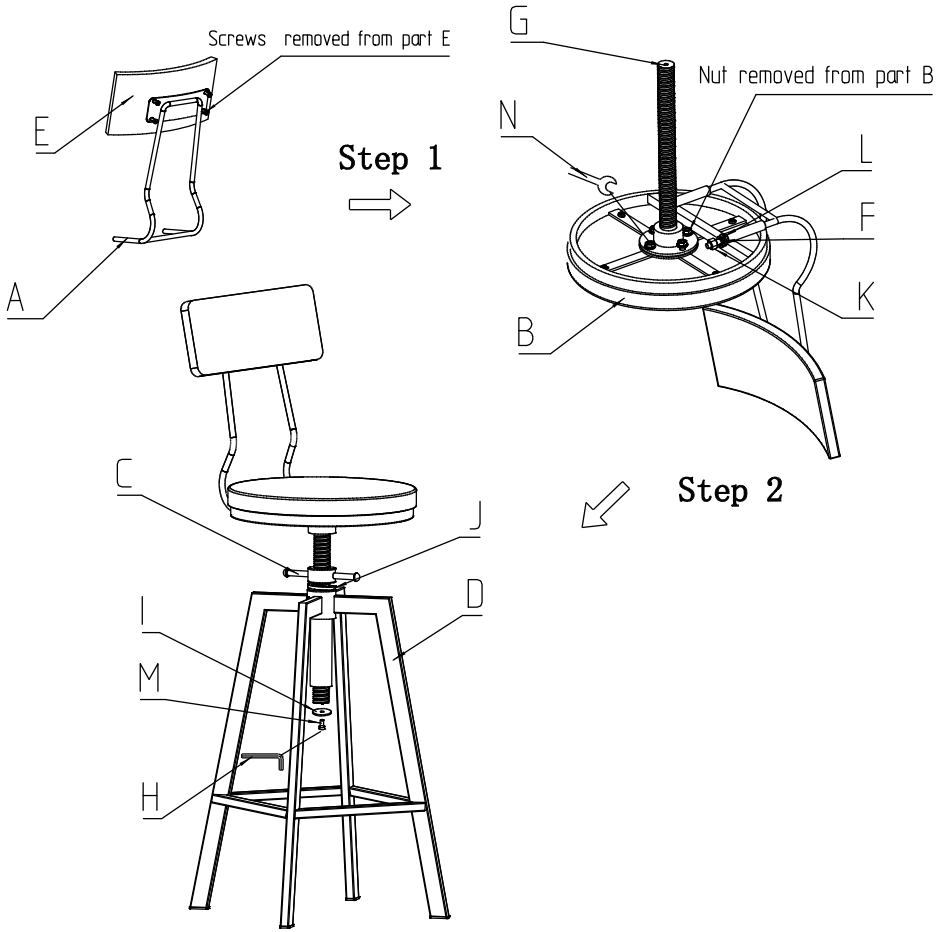

Ax1	Bx1	Cx1	Dx1
Ex1	Gx1	Hx1	Nx1 12mm	Fx2
Ix1	Jx1 M27	Kx2 M12	Mx1 M6	Lx2

