ASSEMBLY INSTRUCTION

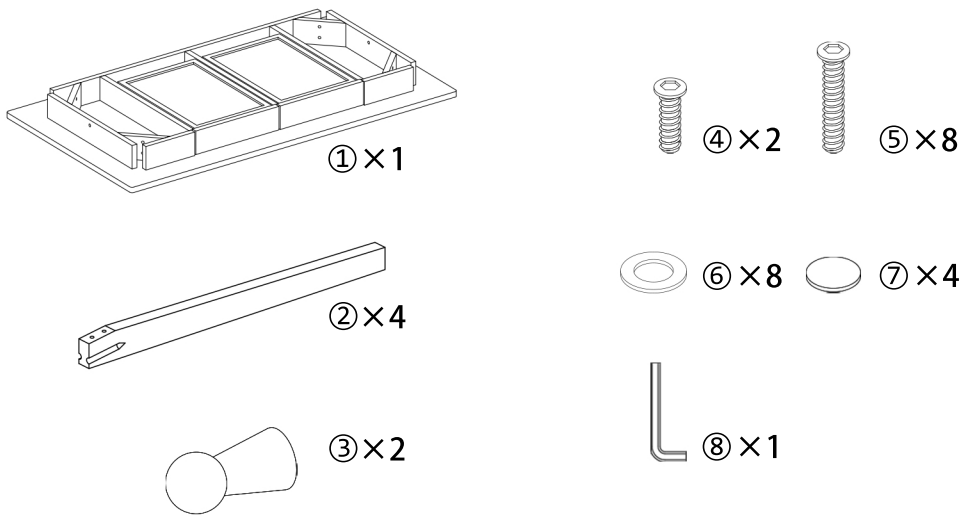

Installation Steps

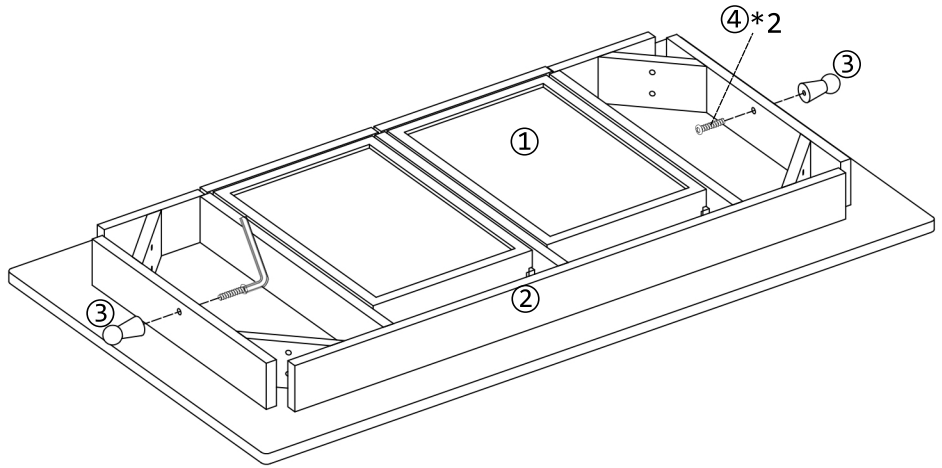

Install hooks.

Installation Steps

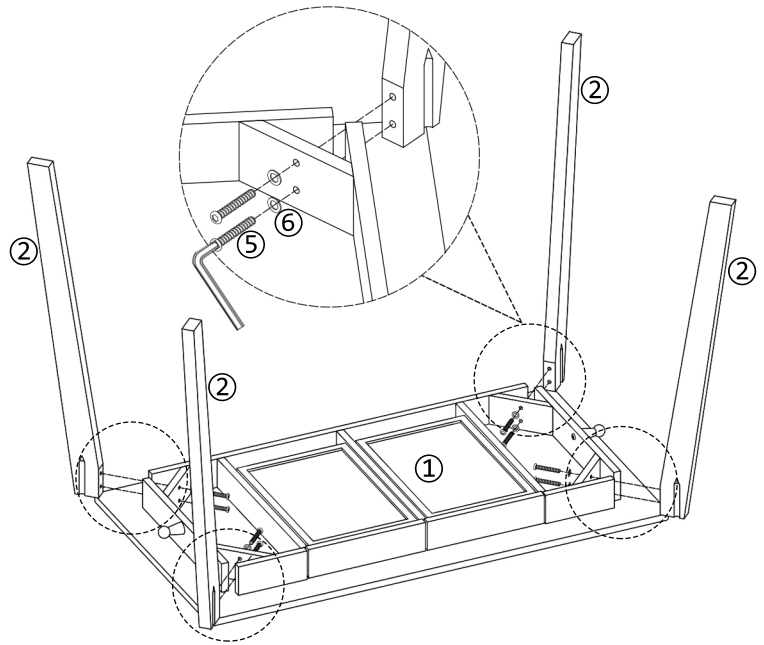

Installation of table legs.

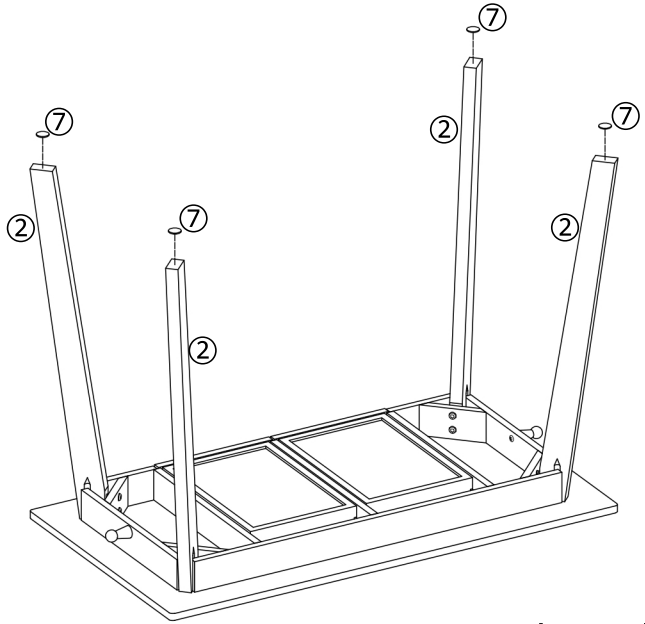

Glue on the foot mats.