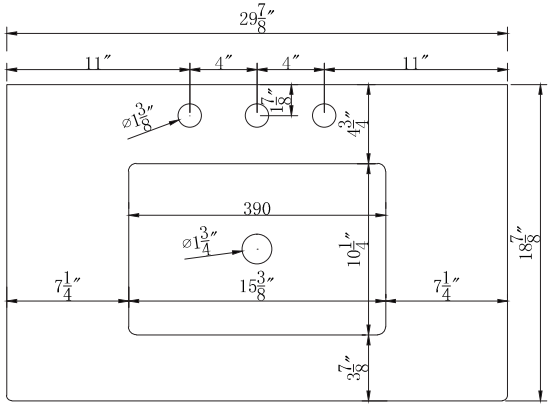

Top view

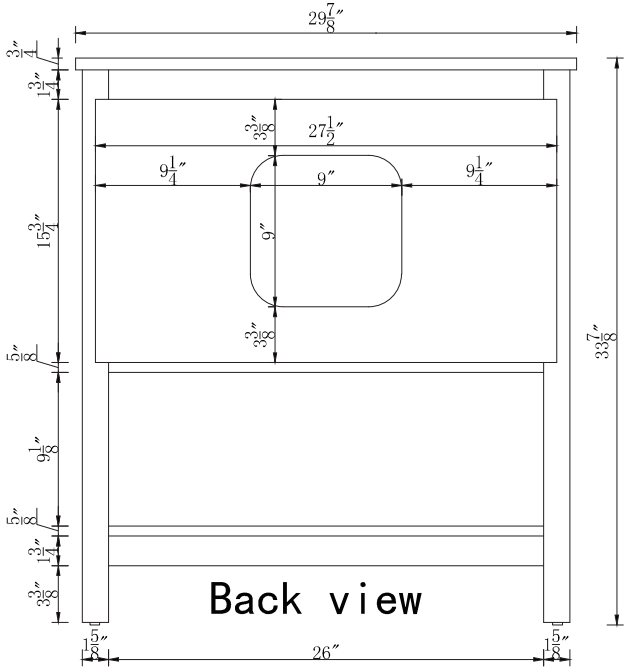

Back view

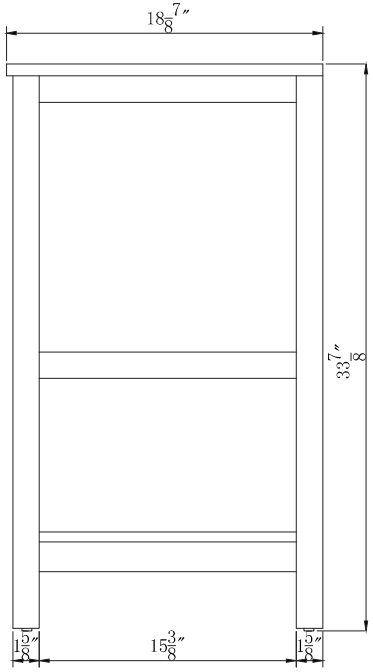

Side view

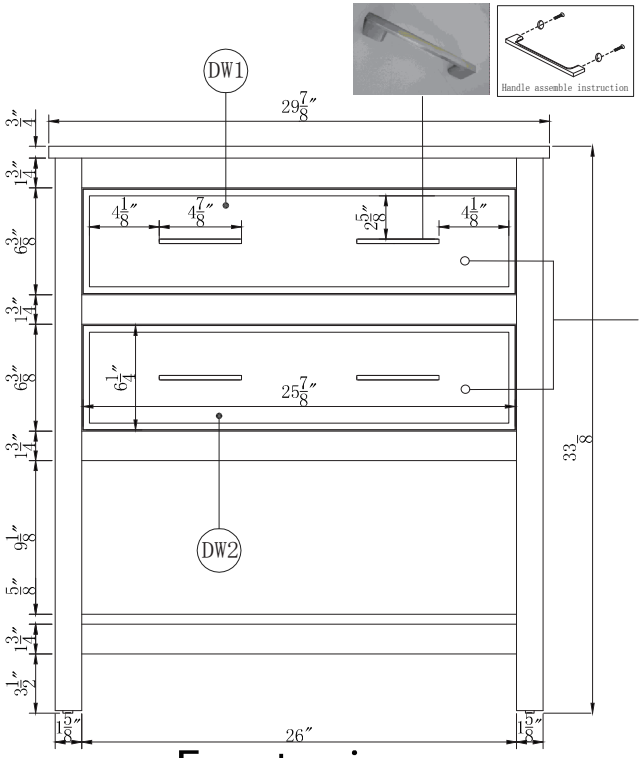

U drawer

Front view

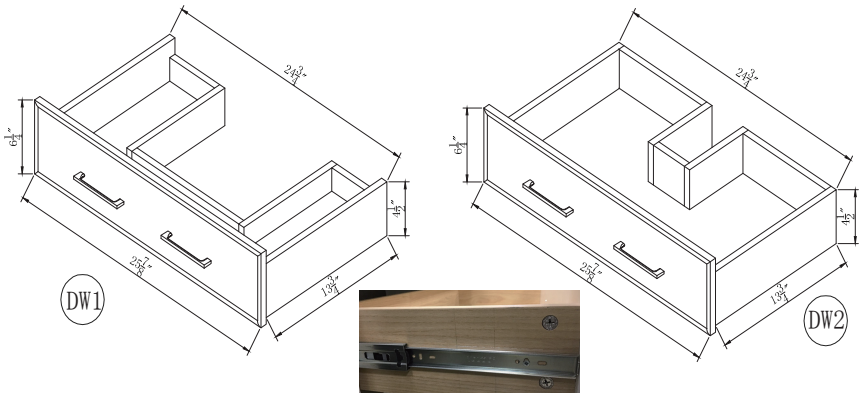

Drawer Interior Size