OFFICE CHAIR

Before you start, here are some helpful advice:

1. We suggest you spend a short time reading through this leaflet and then follow the simple step-by-step instructions.
2. Owing to the size and weight of the office chair, we recommend that it is assembled by two adults, on a carpeted or padded area, in the room that it is intended for. Approximate assembly time: 30 minutes.
3. Please do not use any tools other than those provided or recommended in these instructions.
4. Please do not throw away any of the packaging or the instruction until you have checked all the components and hardware and the furniture is fully assembled. Please ensure that the packaging is disposed of in a safe and environmentally friendly way.
5. Assemble all components loosely until advised to tighten. Depending on use, it may be necessary to tighten the components from time to time, so please save the tools that have been provided.
6. Please keep all the pieces out of reach of children.

Hardware:

A.		Bolt M6x30mm	x6
B.		Bolt M6x22mm	x4
C.		Flat Washer	x4
D.		Allen Wrench	x1

Components:

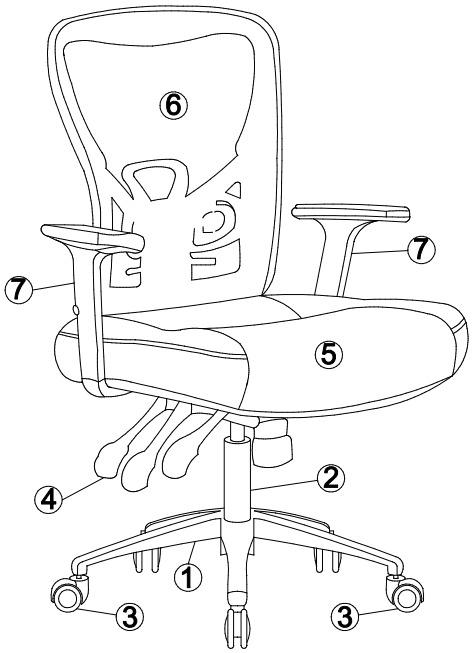

1. Base	x1	2. Cylinder Column	x1	3. Castor	x5	4. Chassis	x1
5. Seat	x1	6. Back	x1	7. Armrest	x2		

OFFICE CHAIR

STEP 1:

1. Please put **Seat (5)** upside down on a carpeted or padded surface.
2. Attach 2 pieces of **Armrests (7)** to the **Seat (5)** by using 6 pieces of **Bolts (A)** as shown and use **Allen Wrench (D)** to tighten all **Bolts (A)** clockwise as shown.

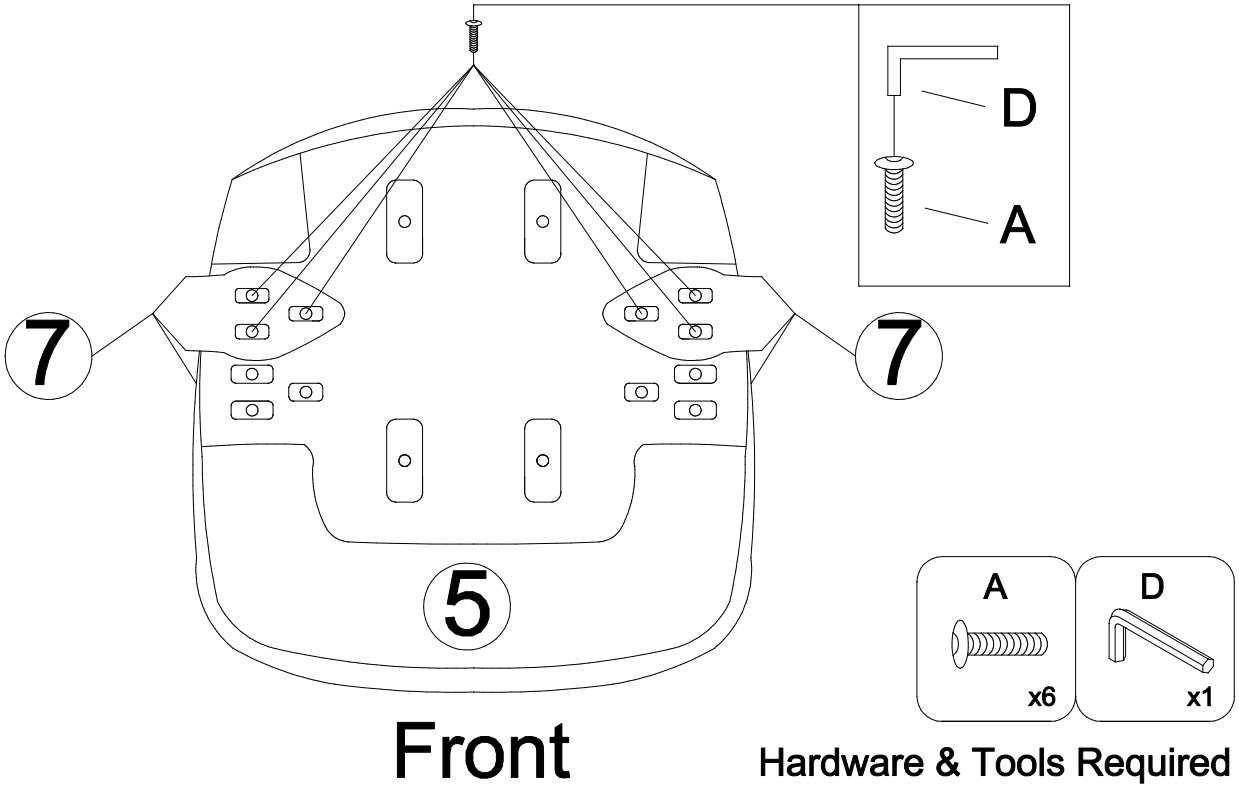

STEP 2:

Attach **Chassis (4)** to the **Seat (5)** by using 4 pieces of **Bolts (B)** and 4 pieces of **Flat Washers (C)** as shown and use **Allen Wrench (D)** to tighten all **Bolts (B)** clockwise as shown.

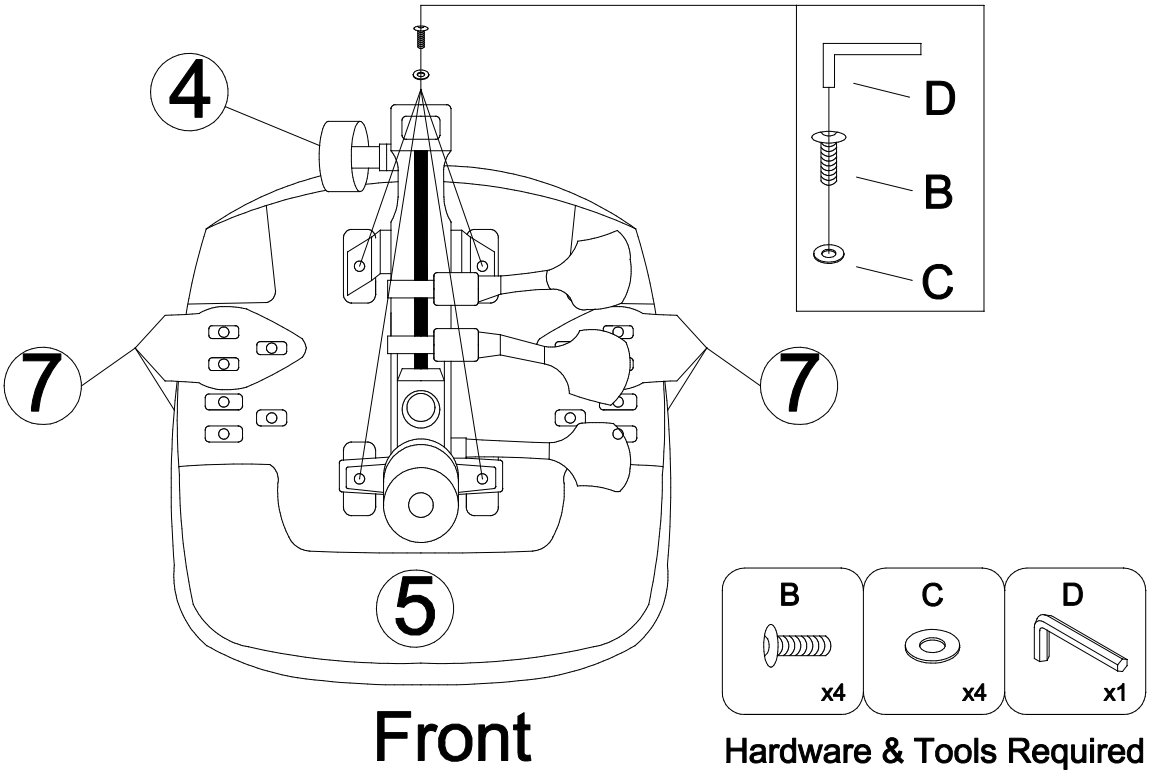

STEP 3.

1. Please put **Base (1)** on a carpeted or padded surface.
2. Insert 1 piece of **Castor (3)** into the **Base (1)** as shown by hand.
3. Repeat the same steps for the remaining 4 pieces of **Castors (3)**.
4. Carefully turn over the assembled **Base (1)** and Insert the **Cylinder Column (2)** as shown.

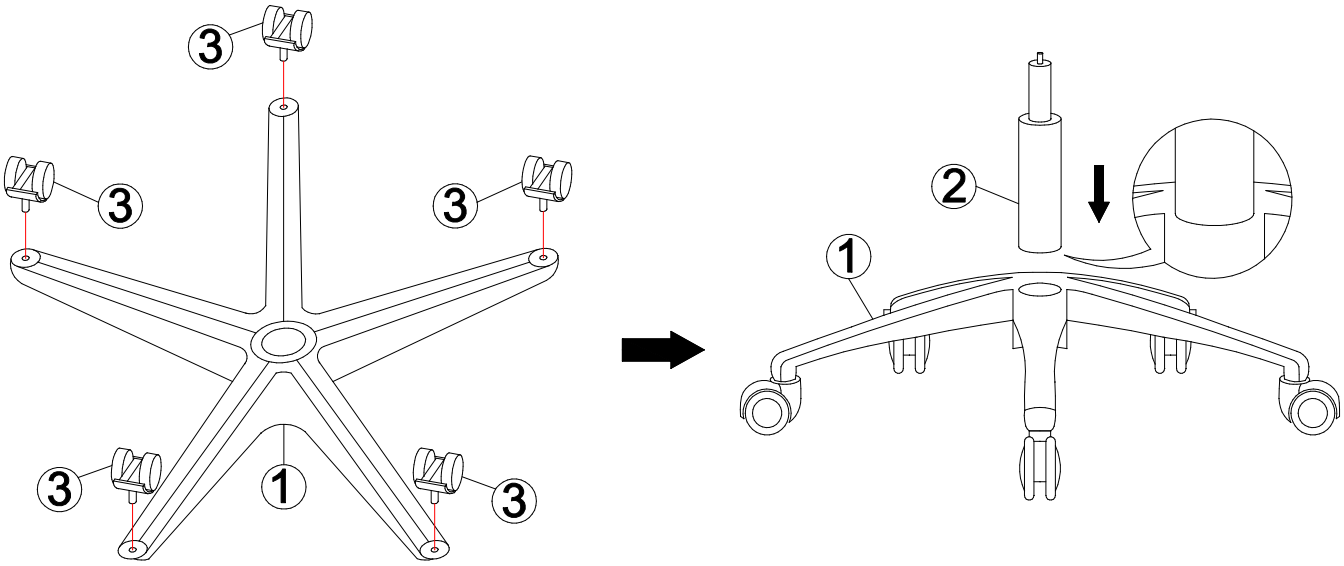

STEP 4:

Carefully turn over the assembled **Seat (5)** and Insert **Chassis (4)** into the **Cylinder Column (2)** as shown.

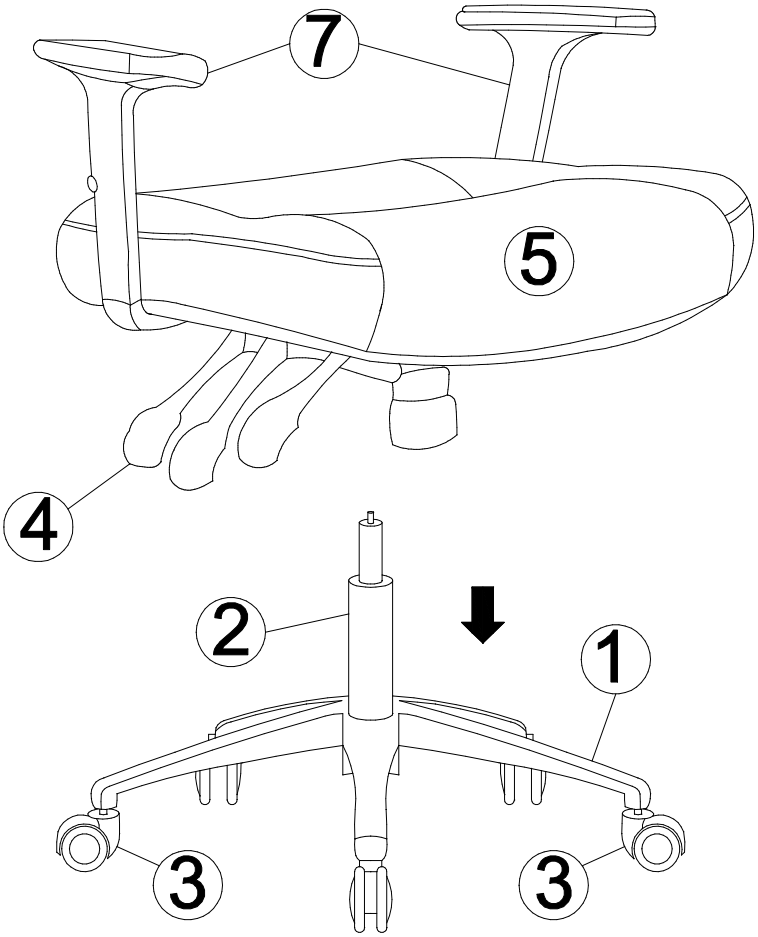

STEP 5:

Insert **Back (6)** into the **Chassis (4)** as shown.

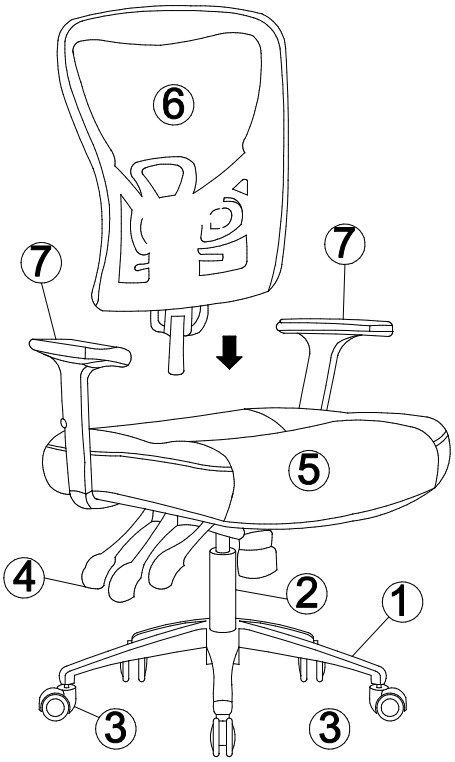

Attention:

When you use the handle to adjust the height to be lower, please move away your feet from the base at the same time.

Your office chair is ready to be used now!