Assembly Instructions

CAUTION: You must read these Assembly Instructions before you proceed.

Care & Maintenance

- ⊘  • Not for commercial use. For residential use only.
- ⊘  • Do not put hot items directly on furniture surface.
- ⊘  • Do not clean furniture with harsh cleansers or polish.
- ✓  • To obtain the longest lifespan of your outdoor products, minimizing exposure to direct sunlight is recommended.
- ⊘  • Children should not climb or jump on the furniture.
- ⊘  • Do not write on furniture without a padded barrier to protect the surface.
- ✓  • To obtain the longest lifespan of your outdoor products, avoid extended and lengthy exposure to rain, snow, and direct sunshine. Whenever possible cover the product and /or place under patio or awnings.
- ⊘  • Stains may be removed with mild soap solution and damp cloth.
- ✓  • Keep away from sources of ignition.

- ✓  • Dust and pick-up spills using a clean, non-colored, lint-free cloth.

Please look under the Seat Panel for hardware pack.

Chair

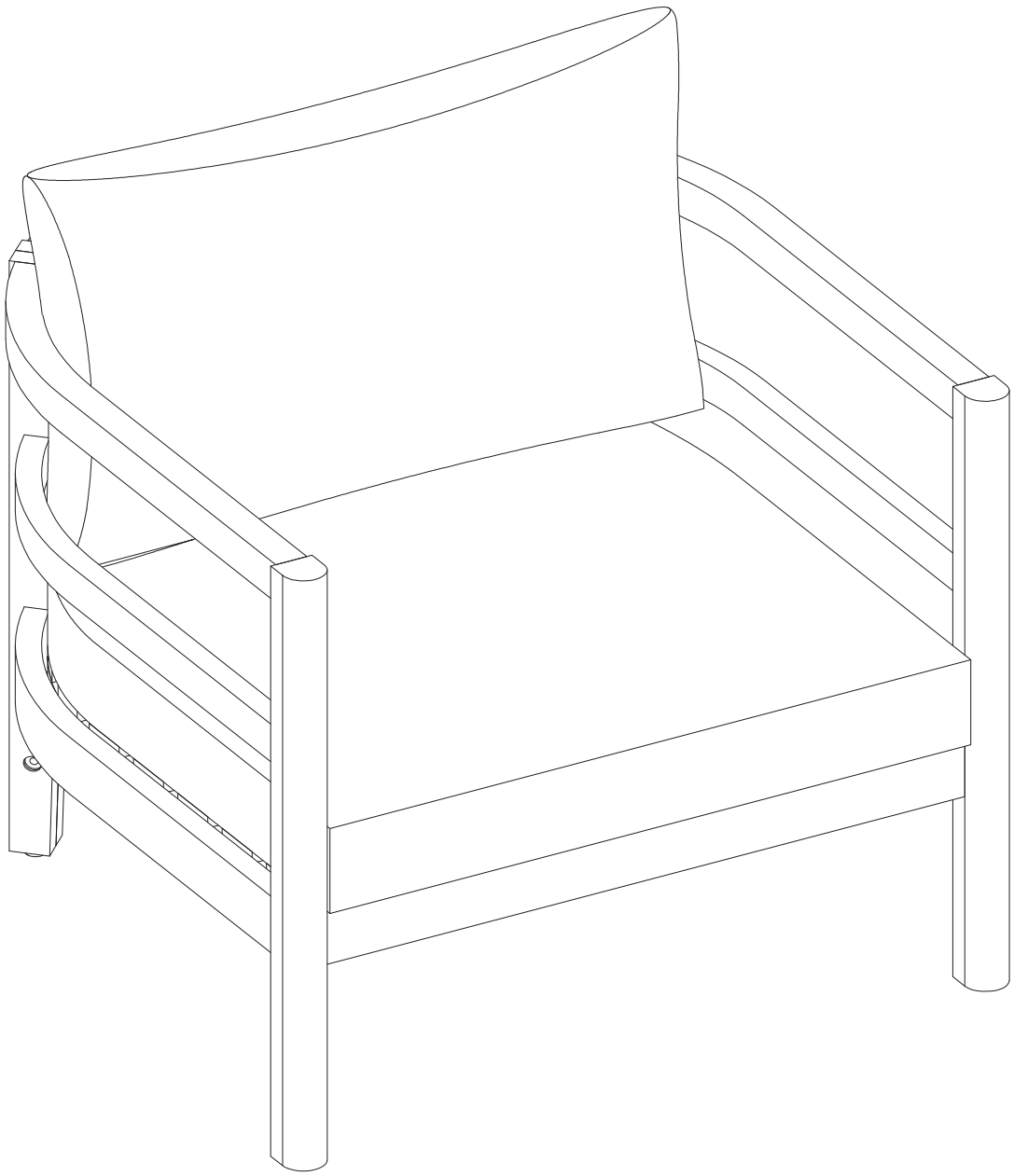

CAUTION: This Chair is NOT a TOY.
Keep your child / children at bay in the process of assembly.
For turning the Chair and to prevent damage to the Chair, 02 persons may be needed to execute this action.

Parts List

Label	Picture	Description	QTY
A	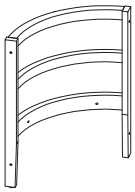	Backrest Panel	1
B	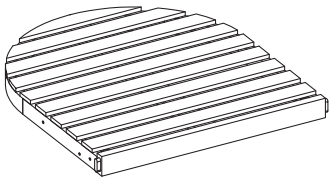	Seat Panel	1
C	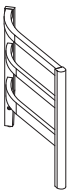	Left Side Panel	1
D	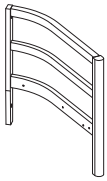	Right Side Panel	1
E	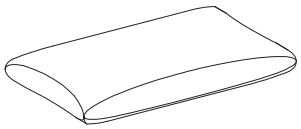	Back Cushion	1
F	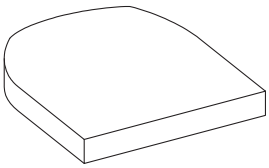	Seat Cushion	1

Hardware

Label	Picture	Description	QTY
①		Bolt (M6 x 35mm)	11
②		Bolt (M6 x 30mm)	5
③		Nut (M6x15mm)	5
④		Allen Wrench	2

Assembly Preparation

Before Beginning Assembly:

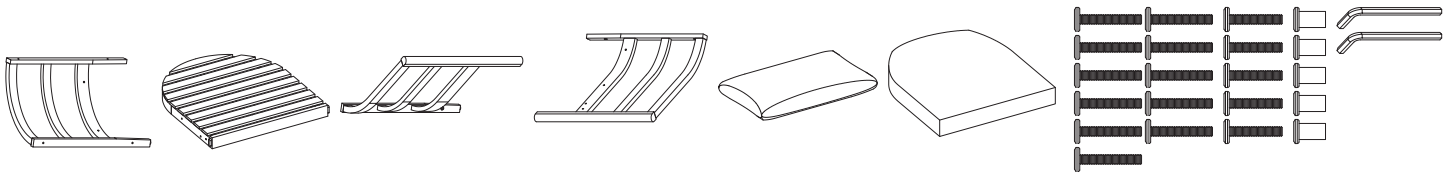

- Read instructions, cover to cover.
- Have 2 adults on hand for assembly.
- Do not assemble on flooring or carpet.
- Assemble on a clean non-marring surface (packing foam).
- Save all packaging until finished.

Assembly Steps

Overview

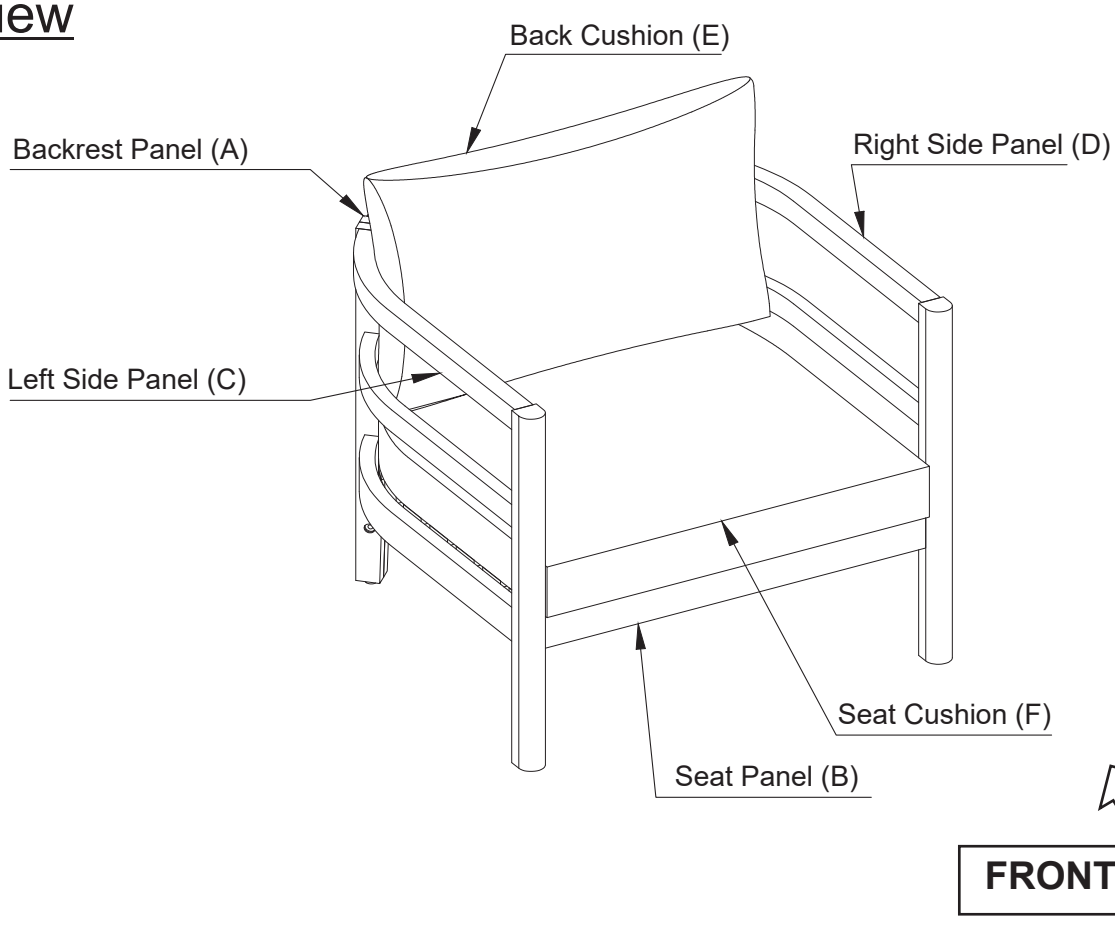

This Chair has multiple parts and may require up to 30 minutes to assemble. To give you an overview of the Chair parts, the above picture is to help you put the various parts into perspective. Please read through the instructions herebelow to familiarise yourself with the parts and steps before assembly.

Step 1

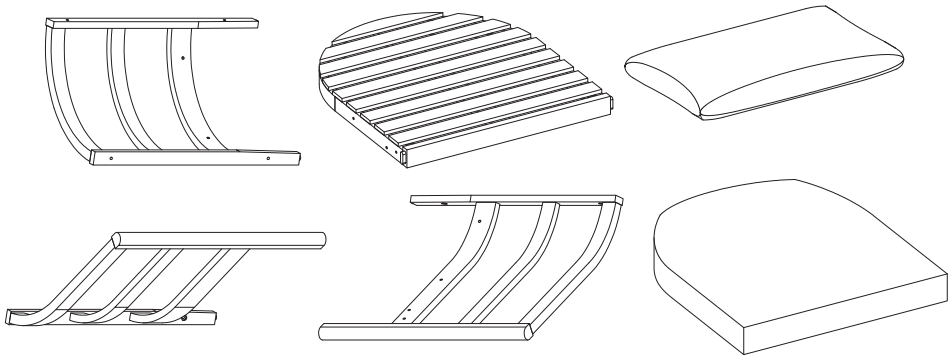

Unpack and place all parts on a clean, non-marring surface.

Step 2

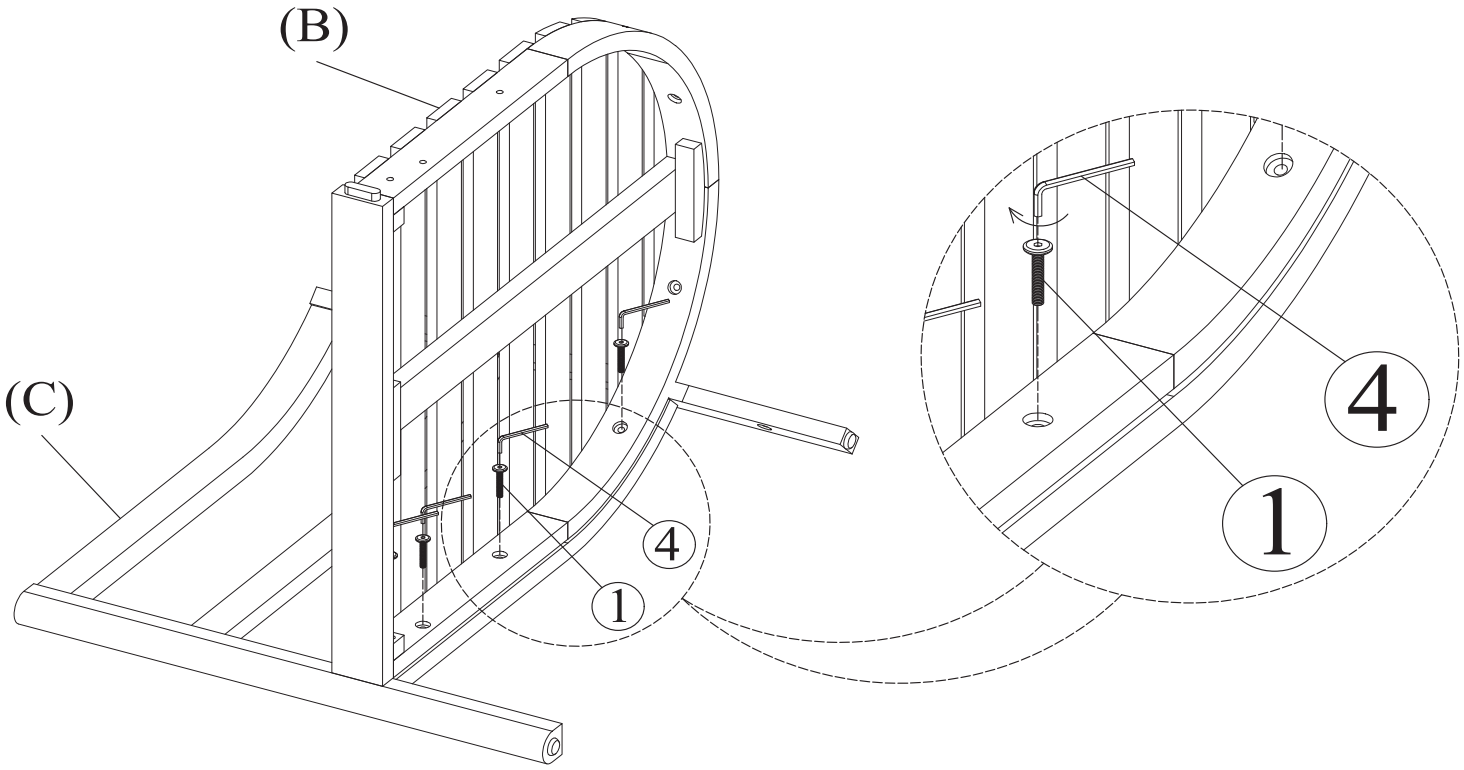

Place the Left Side Panel (C) facedown on a clean, non-marring surface as shown above.
With assistance from your adult partner, attach the Seat Panel (B) to the Left Side Panel (C) using Bolts (①) and the Allen Wrench (④).
Do not fully tighten the Bolts.

Step 3

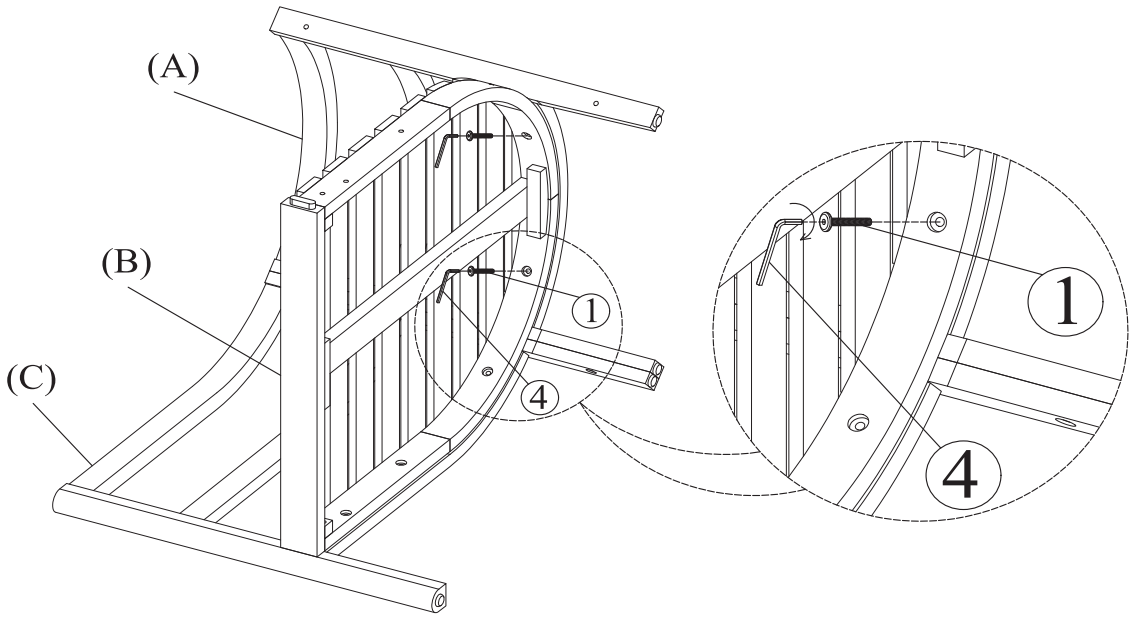

With assistance from your adult partner, attach the Backrest Panel (A) to the Seat Panel (B) using Bolts (①) and the Allen Wrench (④) as shown above.
Do not fully tighten the Bolts.

Step 4

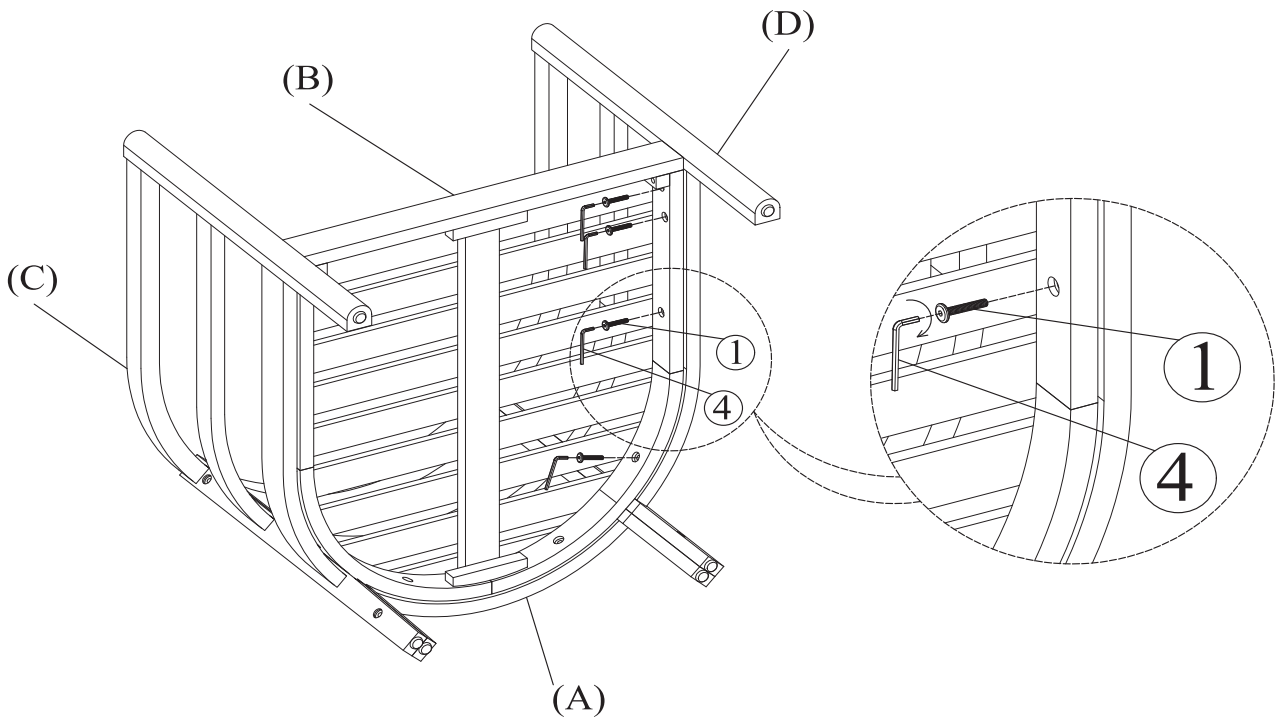

With assistance from your adult partner, attach the Right Side Panel (D) into the Seat Panel (B) using Bolts (①) and the Allen Wrench (④) as shown above.
Do not fully tighten the Bolts.

Step 5

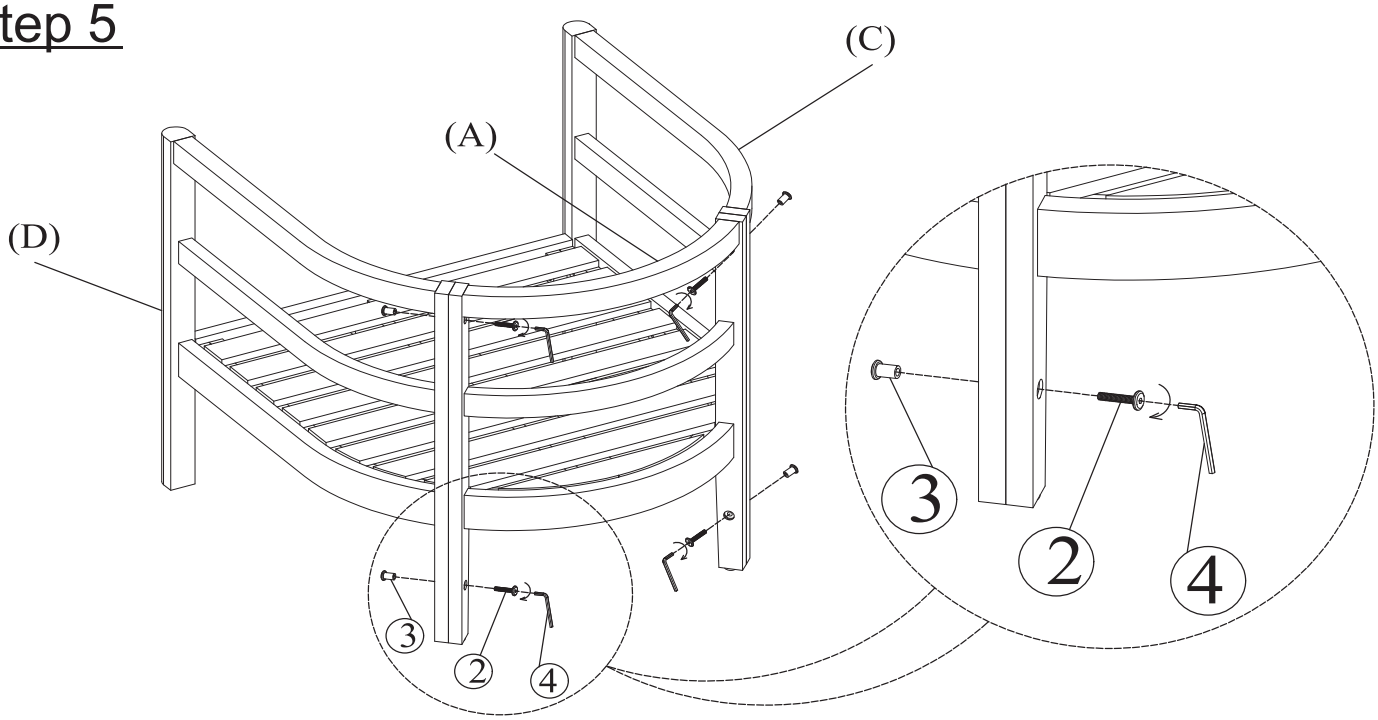

Turn the Chair right side up.
Scure the Left Side Panel (C) and the Right Side Panel (D) to the Backrest Panel (A) using Bolts (②), Nuts (③) and the Allen Wrench (④) as shown in the picture above.
Do not fully tighten the Bolts.

Step 6

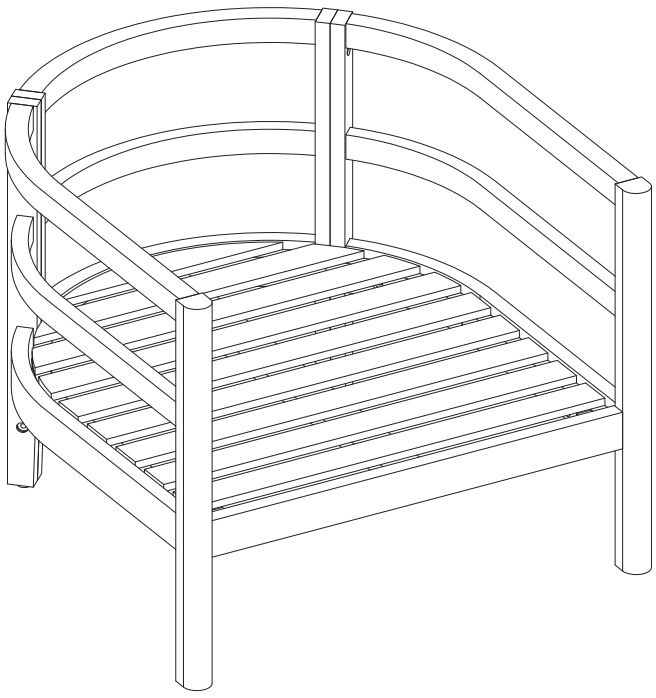

EXERT pressure, floorwards onto the Chair with both hands.
This pressure will help the Chair reach full alignment at all joints.
Inspect the Chair and make sure all parts are adequately connected.
In a sequential manner, **tighten ALL Screws and Bolts at ALL joints.**

Step 7

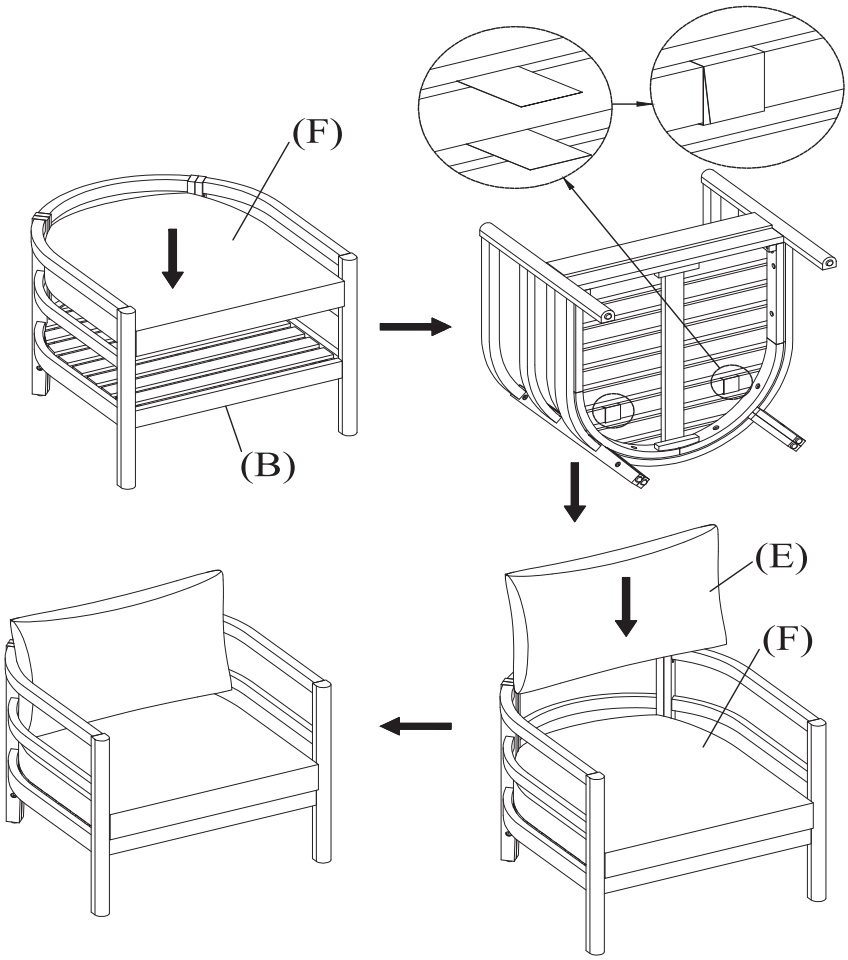

Place the Seat Cushion (F) onto the Chair and affix the magic tape straps around the Chair as shown above.
Then place the Back Cushion (E) onto the Chair.
Your Chair is ready to be used.
This Chair can only be used on a flat, level surface.

Questions & Answers about Proposition 65
• What is Proposition 65?
Proposition 65 requires businesses to provide warnings to Californians about significant exposures to chemicals that cause cancer, birth defects or other reproductive harm. These chemicals can be in the products that Californians purchase, in their homes or workplaces, or that are released into the environment. By requiring that this information be provided, Proposition 65 enables Californians to make informed decisions about their exposures to these chemicals.
Proposition 65 also prohibits California businesses from knowingly discharging significant amounts of listed chemicals into sources of drinking water.
Proposition 65 requires California to publish a list of chemicals known to cause cancer, birth defects or other reproductive harm. This list, which must be

updated at least once a year, has grown to include approximately 900 chemicals since it was first published in 1987.

• What types of chemicals are on the Proposition 65 list?

The list contains a wide range of naturally occurring and synthetic chemicals that include additives or ingredients in pesticides, common household products, food, drugs, dyes, or solvents. Listed chemicals may also be used in manufacturing and construction, or they may be byproducts of chemical processes, such as motor vehicle exhaust.

• What does a warning mean?

If a warning is placed on a product label or posted or distributed at a workplace, a business, or in rental housing, the business issuing the warning is aware or believes that it is exposing individuals to one or more listed chemicals.

By law, a warning must be given for listed chemicals unless the exposure is low enough to pose no significant risk of cancer or is significantly below levels observed to cause birth defects or other reproductive harm.

• Where can I get more information on Proposition 65?

If you have specific questions on the administration or implementation of Proposition 65, you can contact OEHHA's Proposition 65 program at P65.Questions@oehha.ca.gov, or by phone at (916) 445-6900.