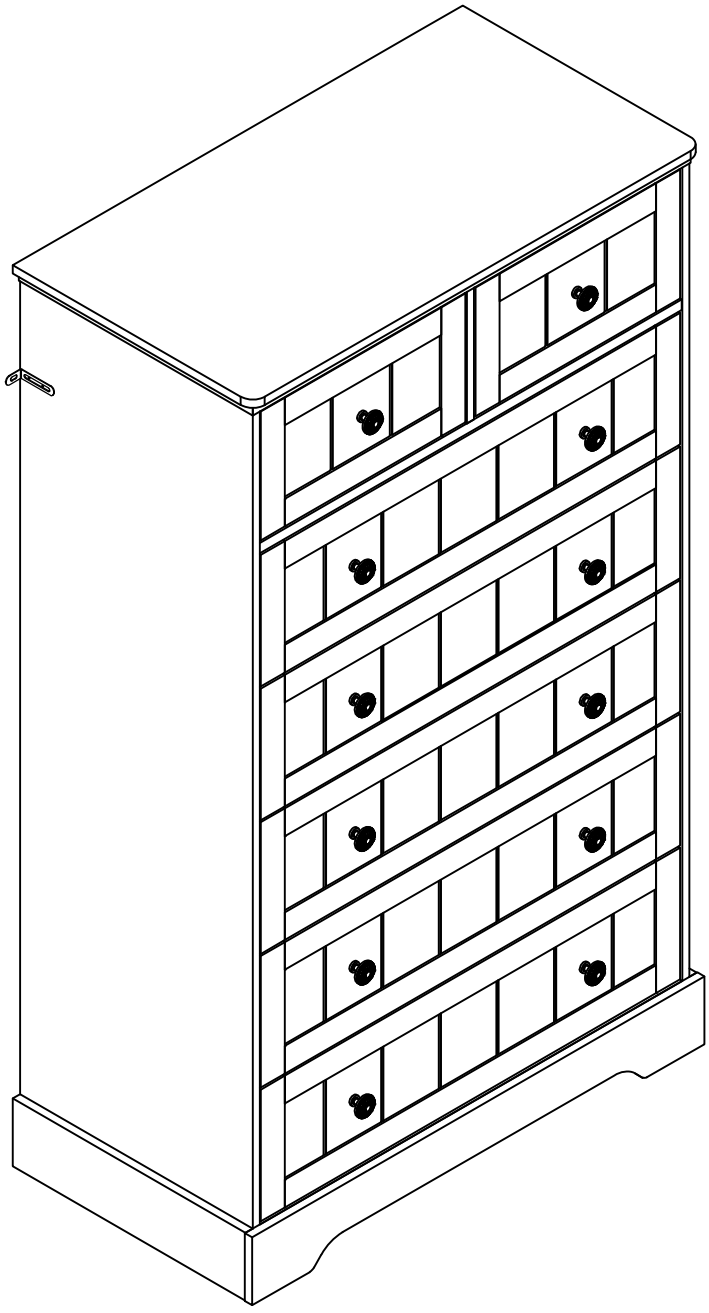

DJ504004

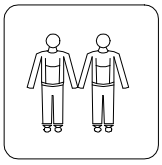

Warning:Please read this instruction manual carefully before using the product.

Version :1.0

Package Contents

Plates and iron components	Assembly tool kit	Instruction manual

Package Contents ⚠

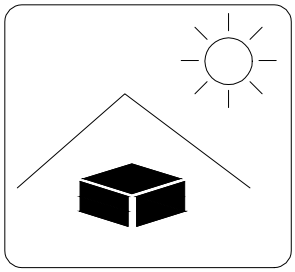

1. Avoid long-term direct sunlight exposure

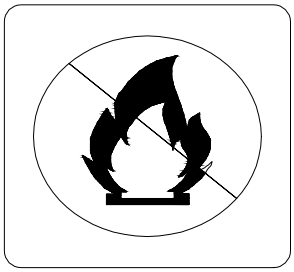

2.Stay away from fire

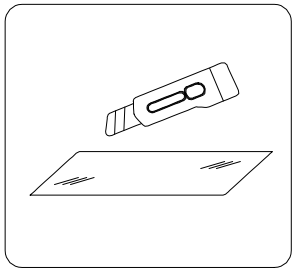

3.keep away from sharp objects

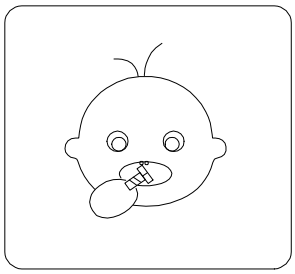

4.Keep infants/children away from assembly parts to avoid choking and suffocation.

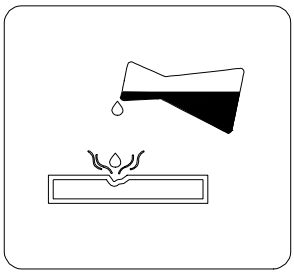

5.keep away from corrosive substances

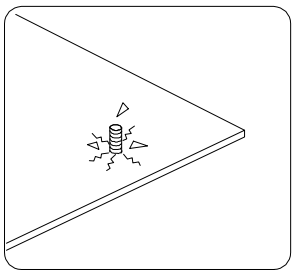

6.Pay attention to avoid cver-tightening fasteners, orthey may induce cra-cking within the board.

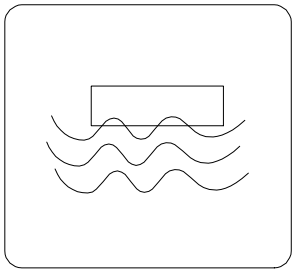

7.Prevent objects from being damaged by immersion in water

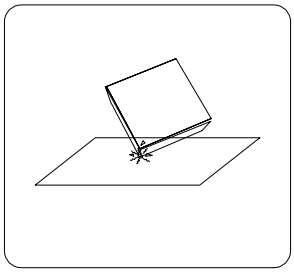

8.Prevent object collision and damage



9.Be careful to avoid collisions

Installation of Cams and Pins

Screw the pin into the hole. To set the cams correctly, ensure that the arrow on the cam is opening o the hole of the pin it is locking. Lock the cam by tturning the cam head with a screwdriver until it is tightened. Please do not use an electric screwdriver to assemble the unit.

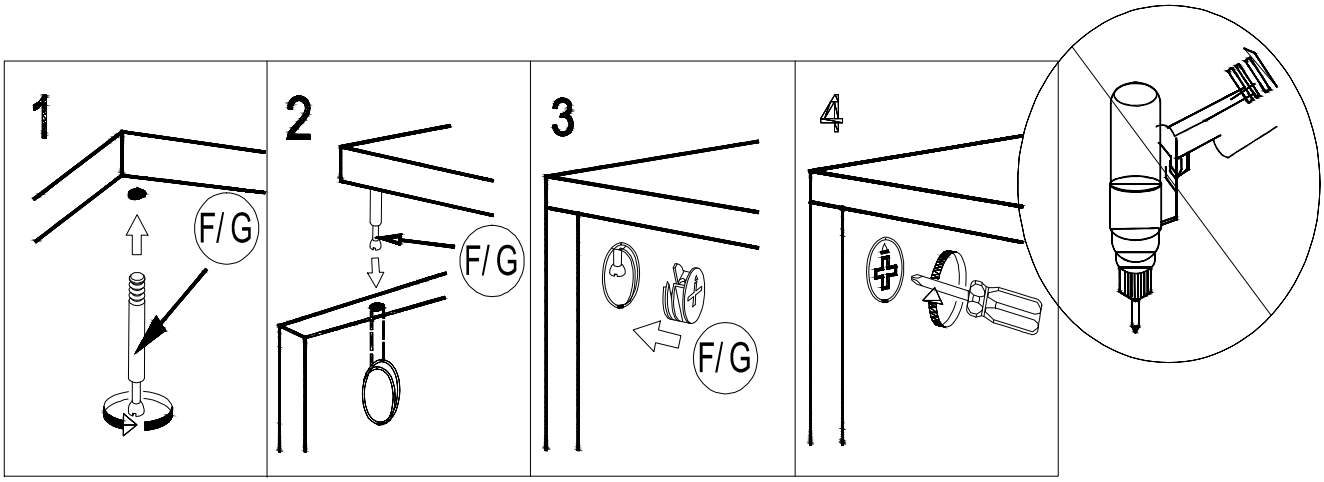

Installation of Cams and Pins

1.Matters needing attention

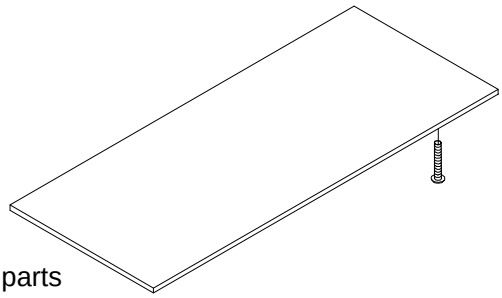

Be sure to use the proper screws to avoid damaging the parts

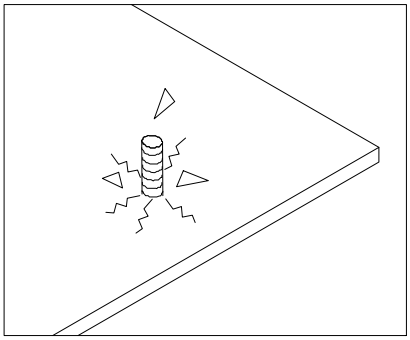

×

Wrong screws can cause the plank to crack

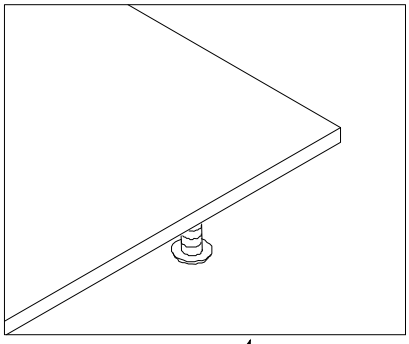

√

The right screw is the right size

Matters needing attention

(1) When installing the screws in the installation step,
the screws do not need to be tightened.
After this installation step is confirmed and the holes are aligned,
then tighten all the screws.

(2) If the screws are tightened during the installation process,
it will cause problems such as misalignment of the screw
holes and misalignment of the board in subsequent installations.

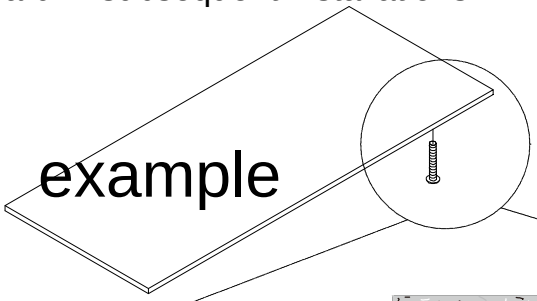

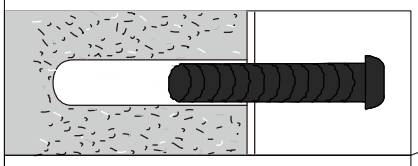

Do not tighten the screws

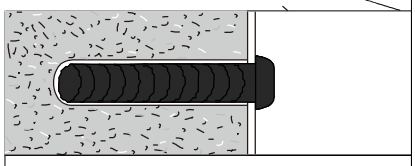

Screw down

Disassembly Diagram

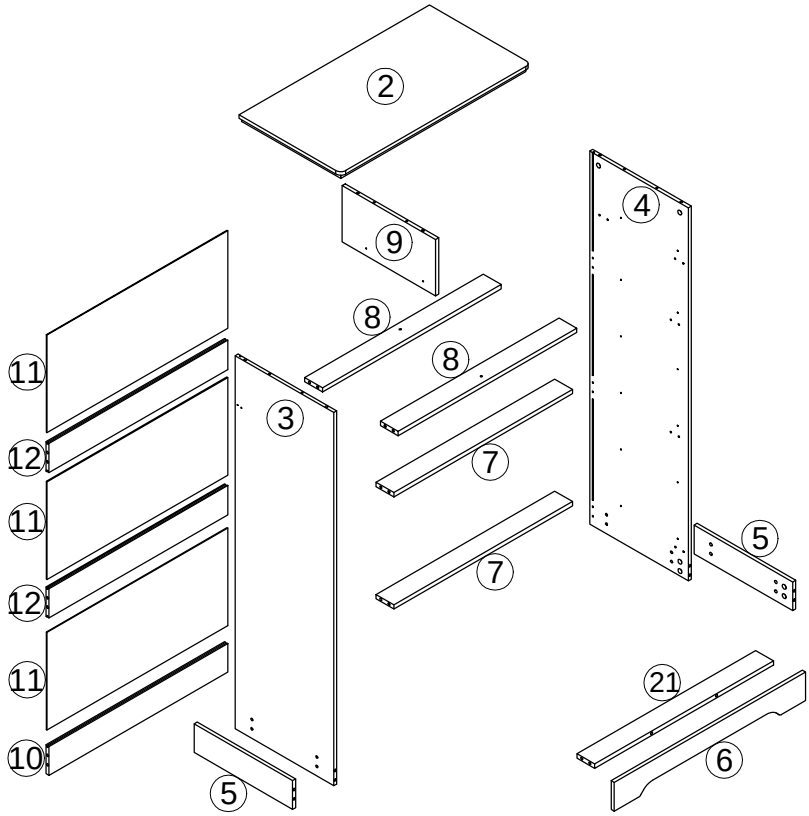

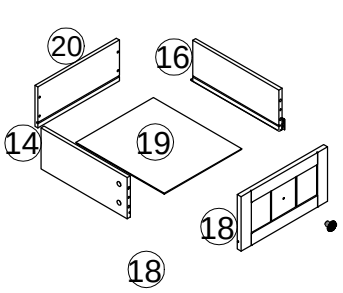

X2

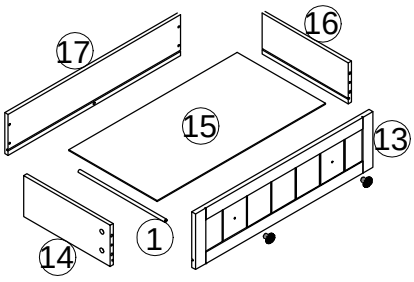

X5

Parts List

1 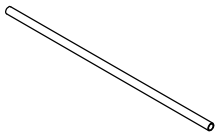 X5	2 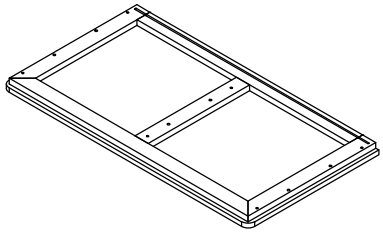 X1	
3 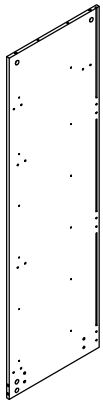 X1	4 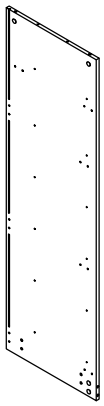 X1	
5 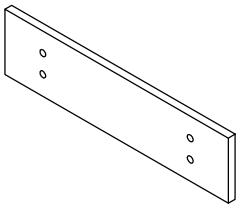 X2	6 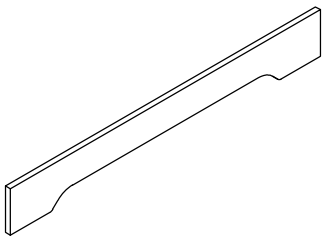 X1	
7 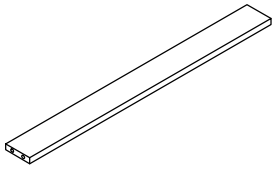 X2	8 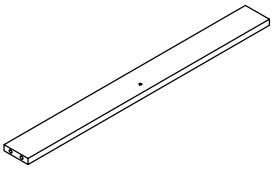 X2	9 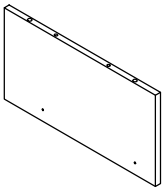 X1

Parts List

10 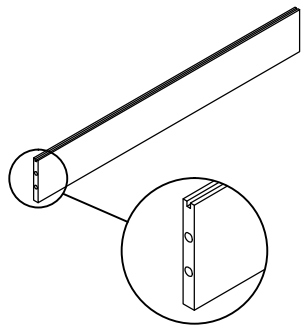 X1	11 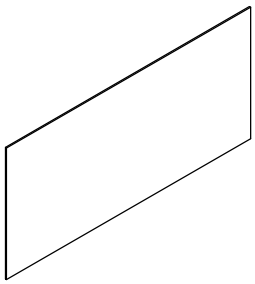 X3	12 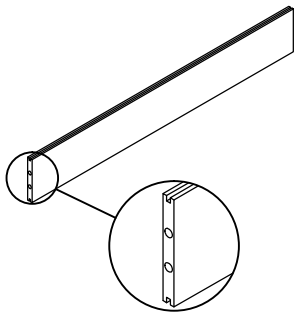 X2
13 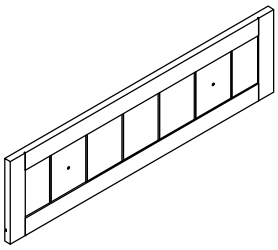 X5	14 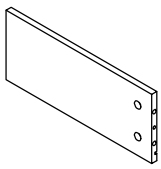 X7	15 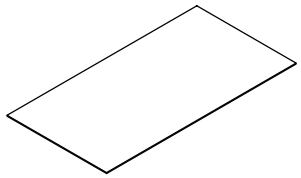 X5
16 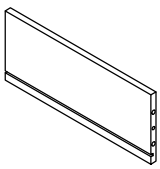 X7	17 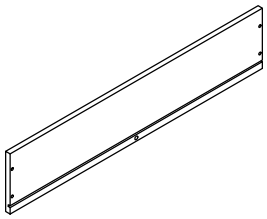 X5	18 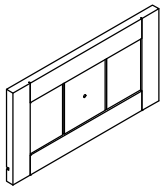 X2	19 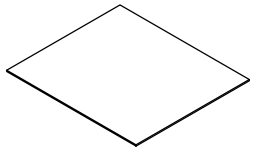 X2
20 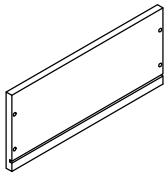 X2	21 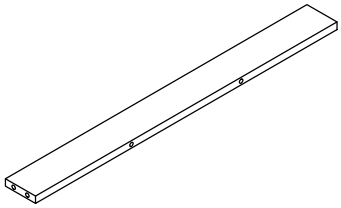 X1	

Tool sheet

A M6*20mm  X13+1	B ST5*40mm 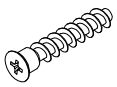 X32+2	C ST6*40mm 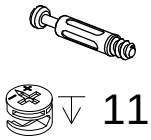 11 X72+5	D Ø6*35mm  X20+2
E M4*16mm  X12	F ST3.5*12mm  X60+4	G M6*20mm  X5	H  X2
I ST3.5*14mm  X12	12" 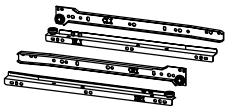 X7	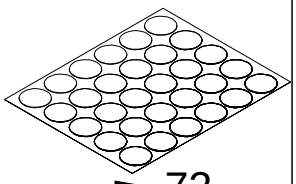 72 X1	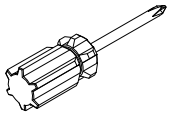 X1

ASSEMBLY INSTRUCTION

STEP 1

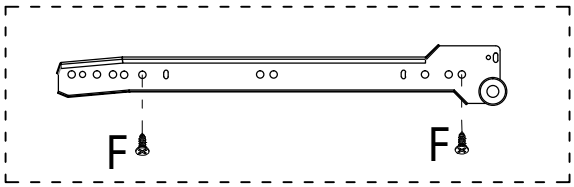

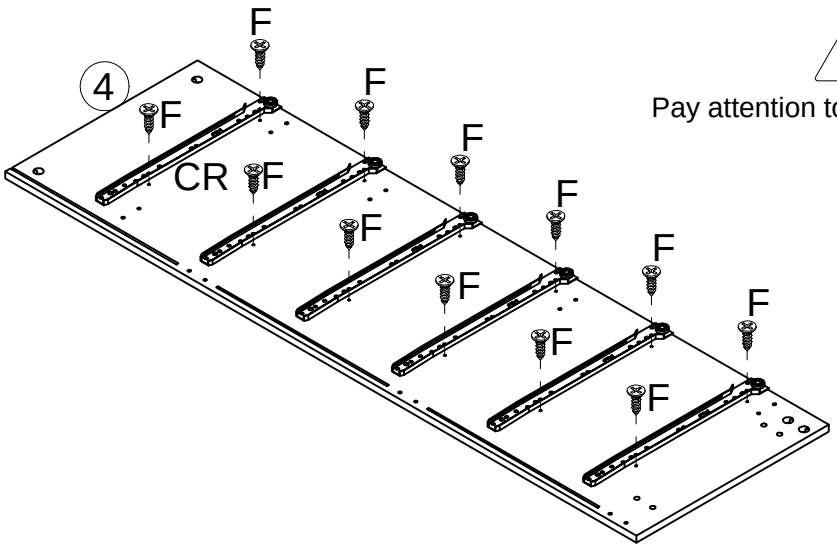

Pay attention to the hole position

F ST3.5*12	X12
CR	X6

STEP 2

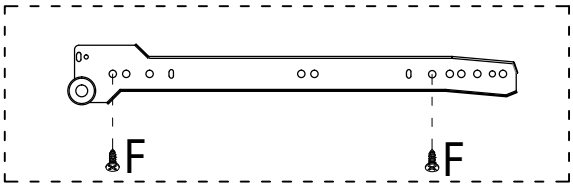

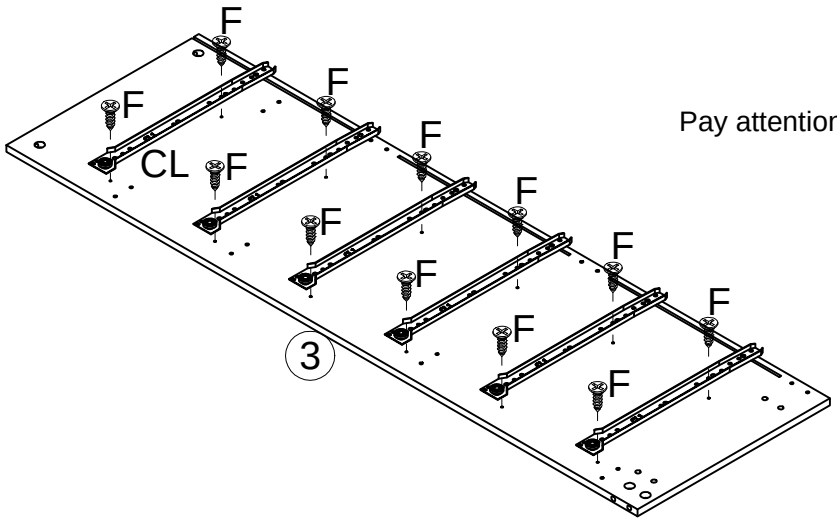

Pay attention to the hole position

F ST3.5*12	X12
CL	X6

ASSEMBLY INSTRUCTION

STEP 3

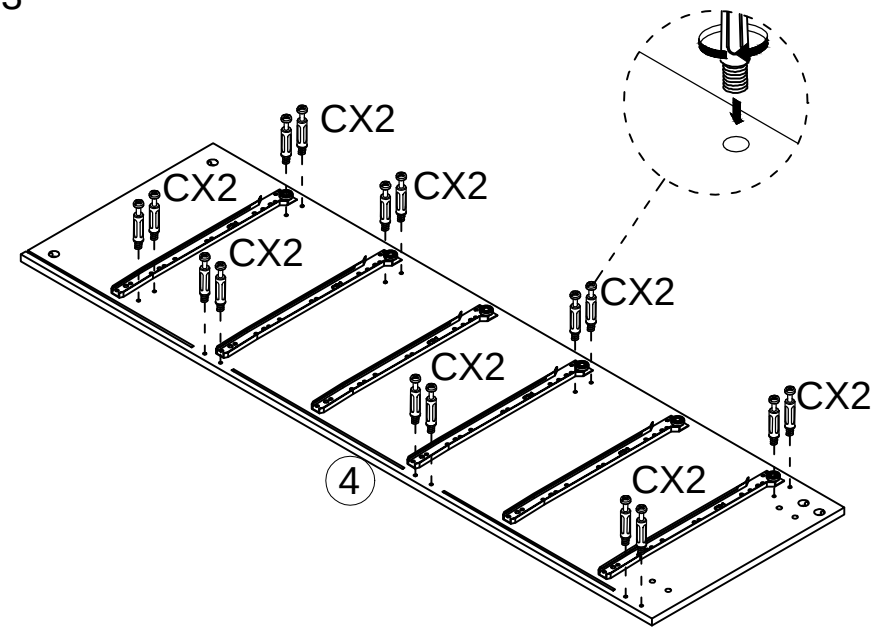

C ST6*40 X16

STEP 4

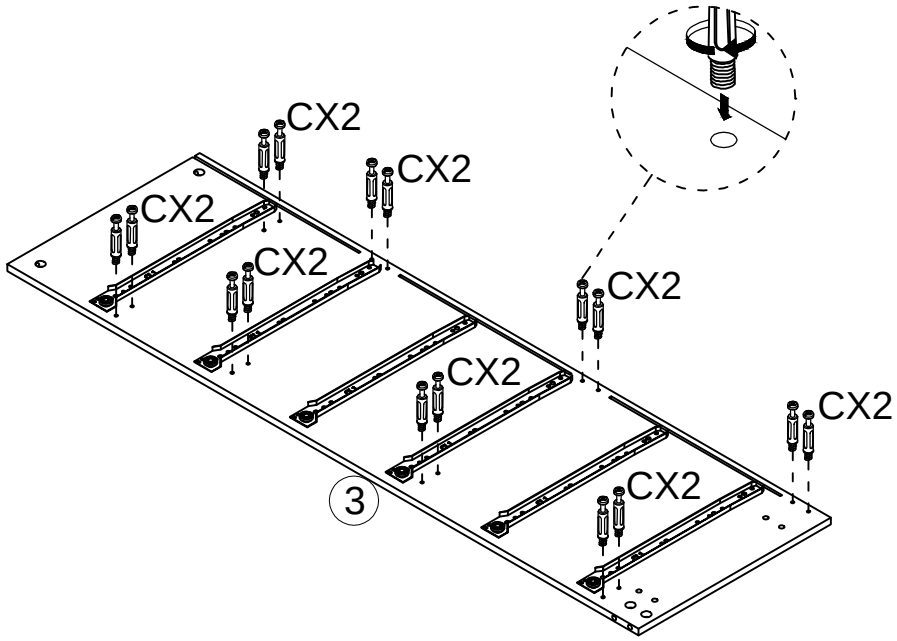

C ST6*40 X16

ASSEMBLY INSTRUCTION

STEP 5

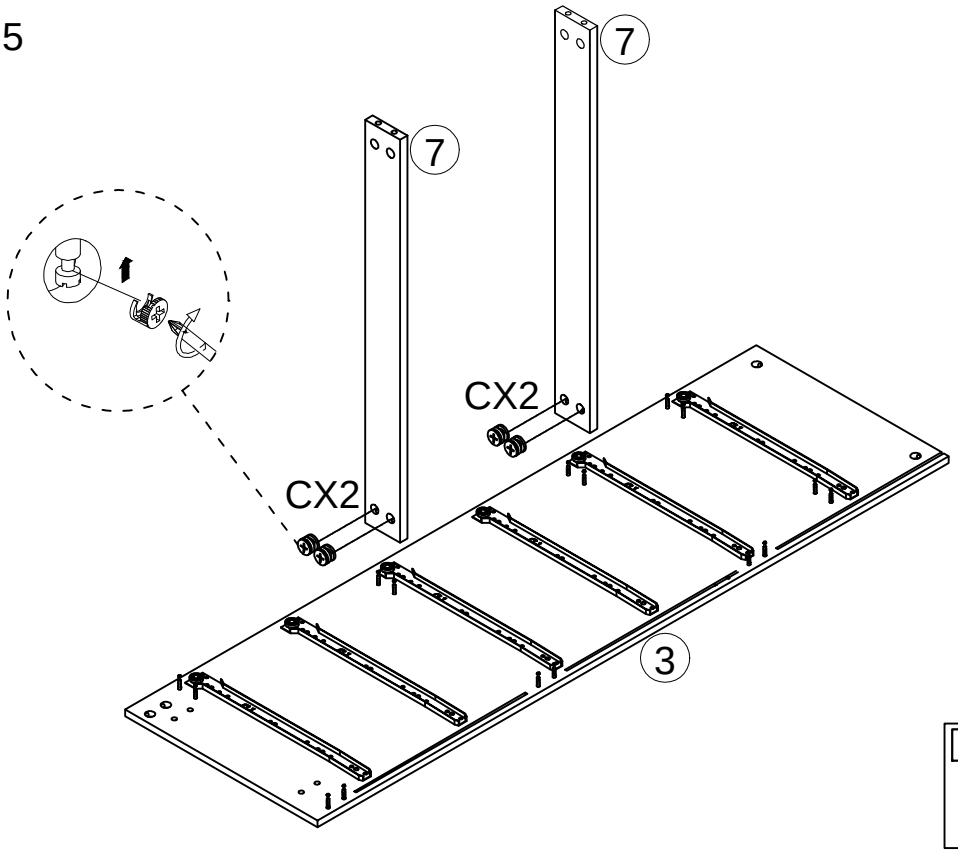

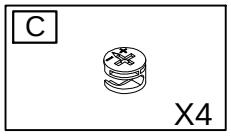

STEP 6

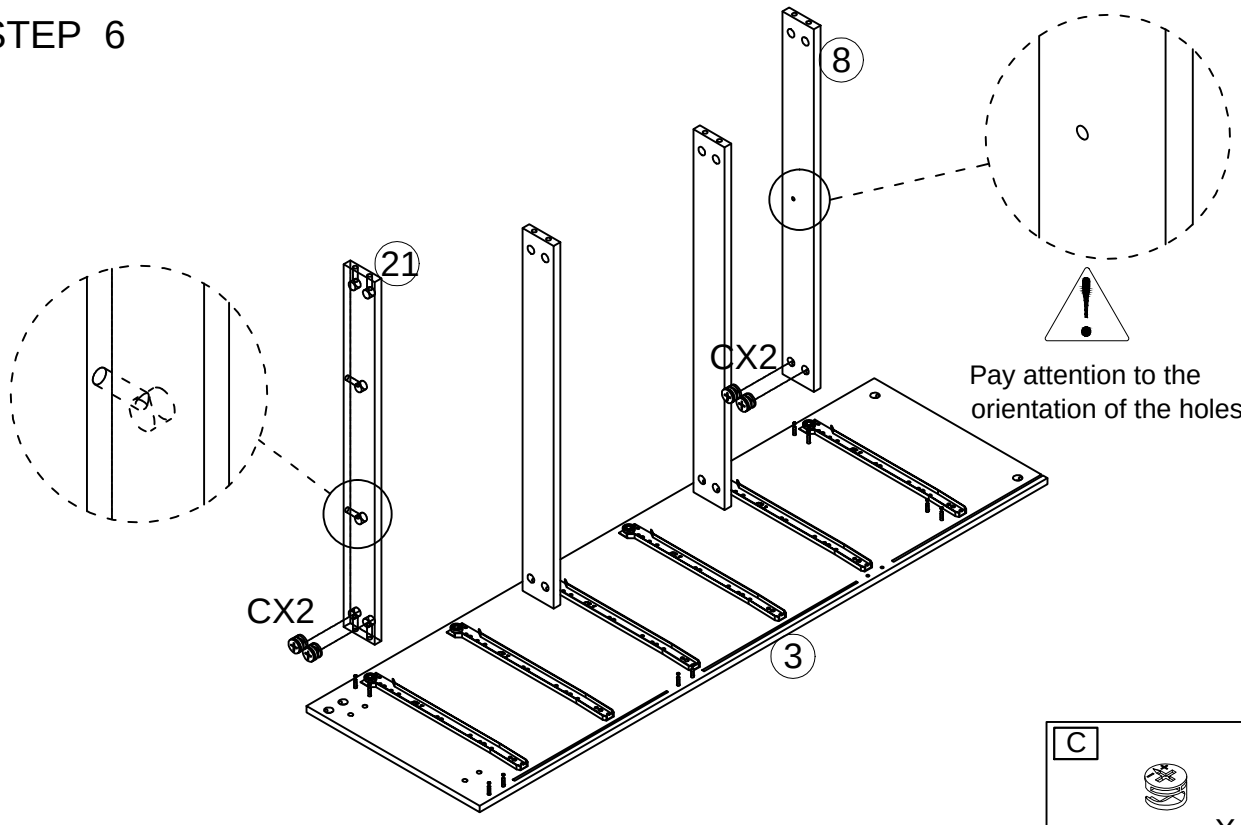

Pay attention to the orientation of the holes

ASSEMBLY INSTRUCTION

STEP 7

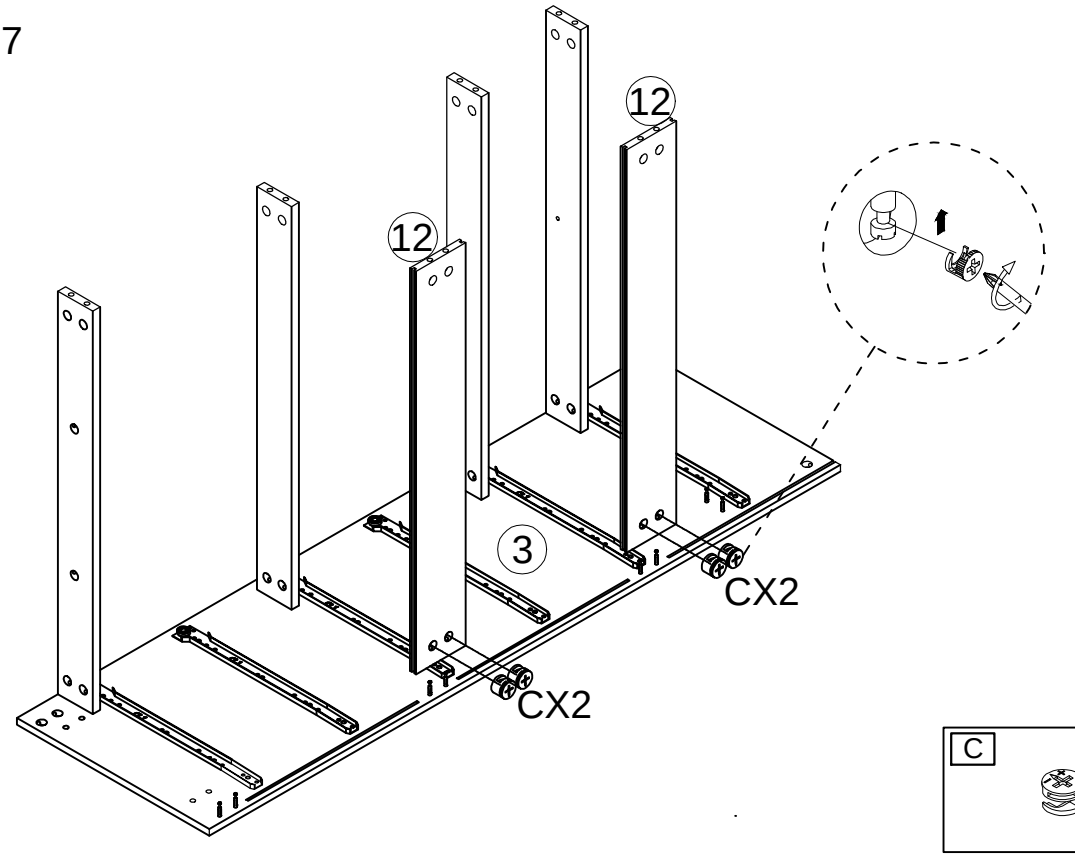

STEP 8

Pay attention to the orientation of the holes

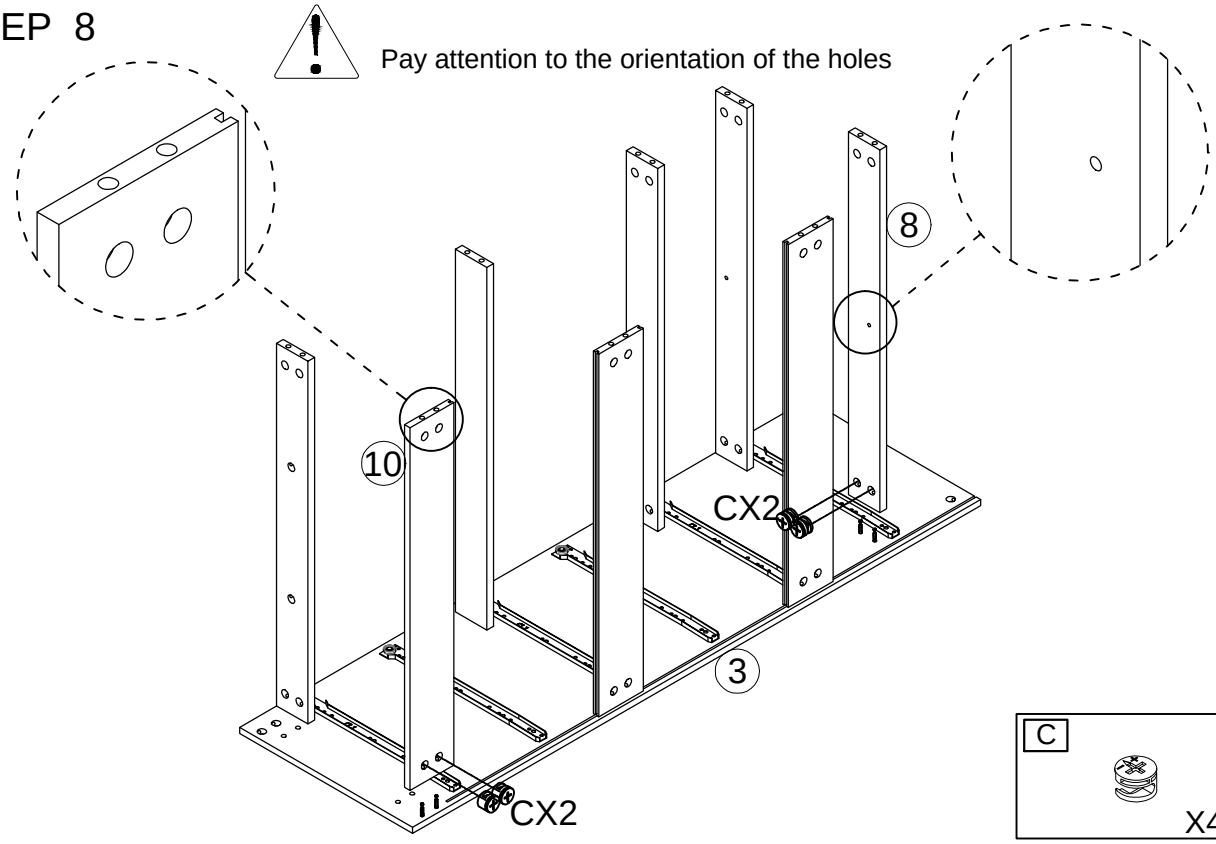

ASSEMBLY INSTRUCTION

STEP 9

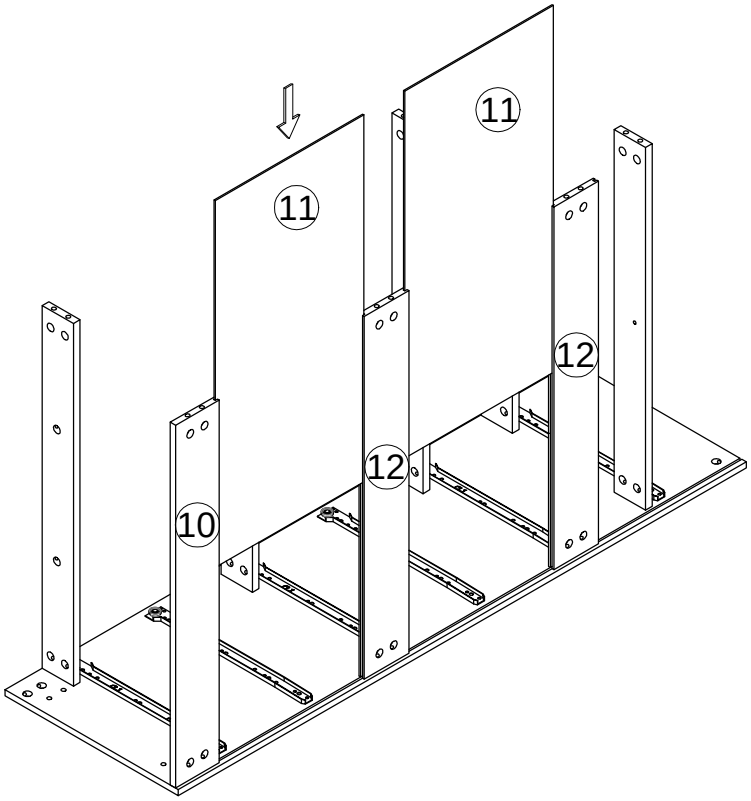

STEP 10

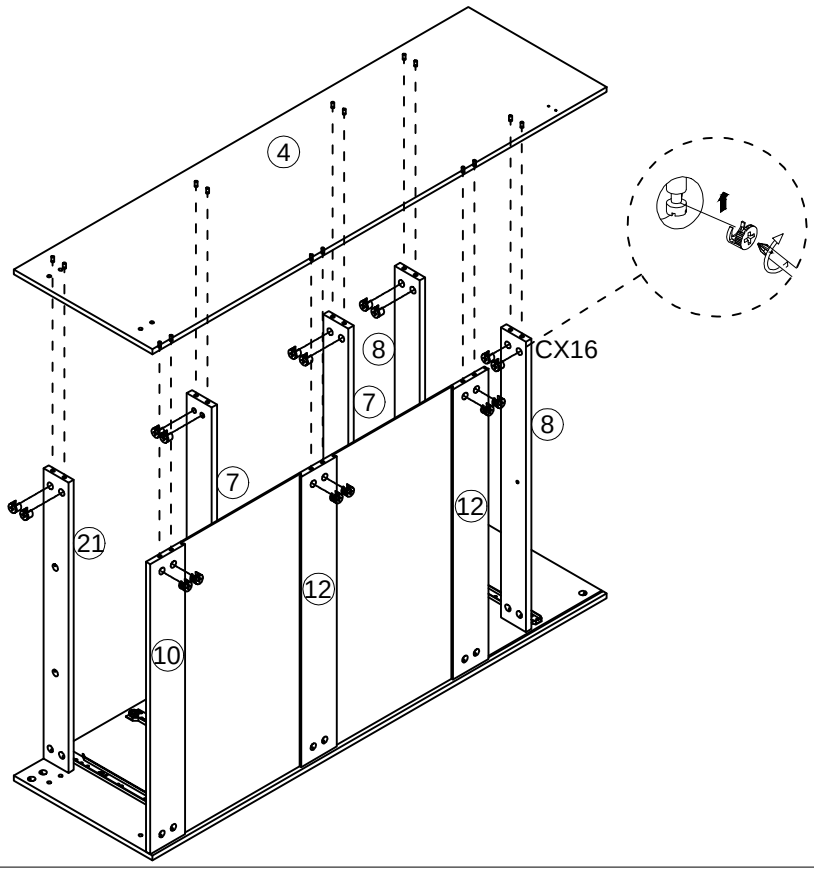

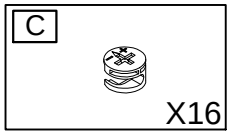

ASSEMBLY INSTRUCTION

STEP 11

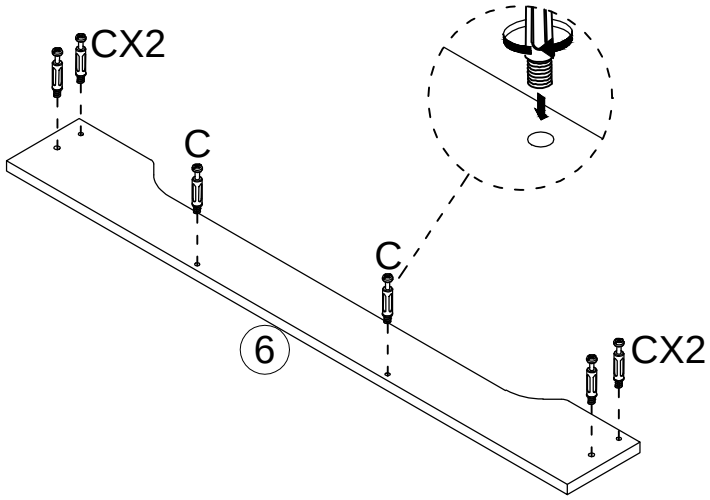

C ST6*40 X6

STEP 12

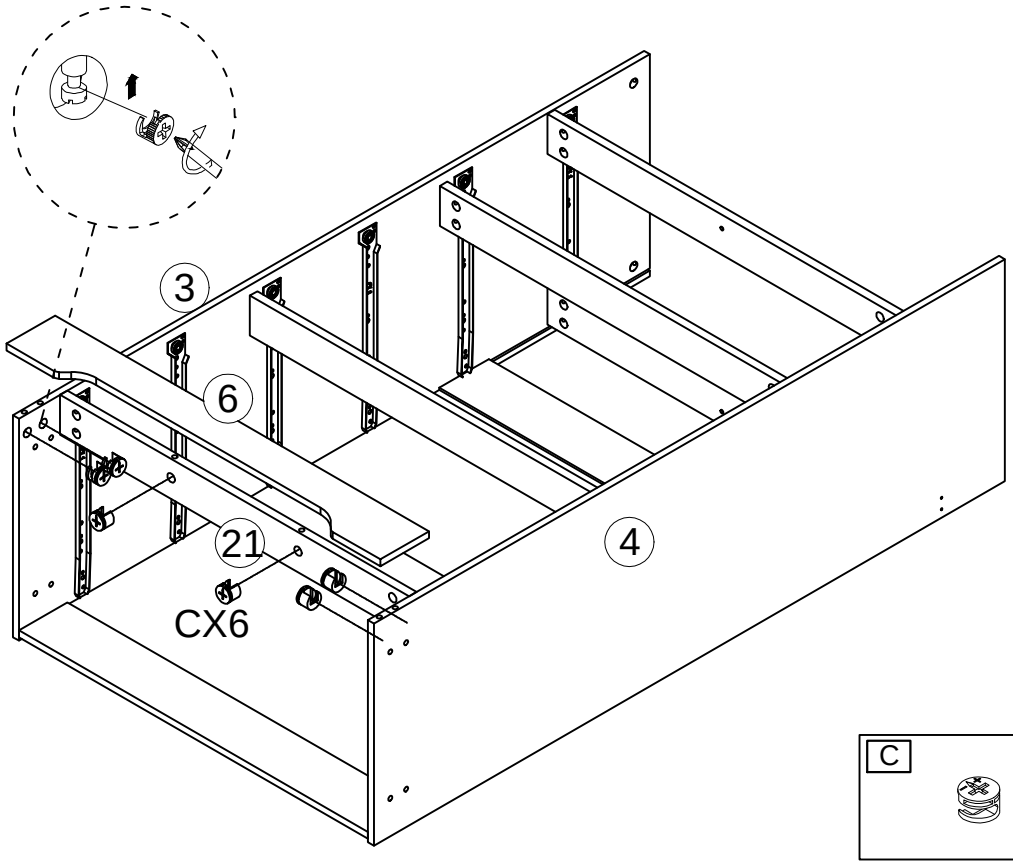

C X6

ASSEMBLY INSTRUCTION

STEP 13

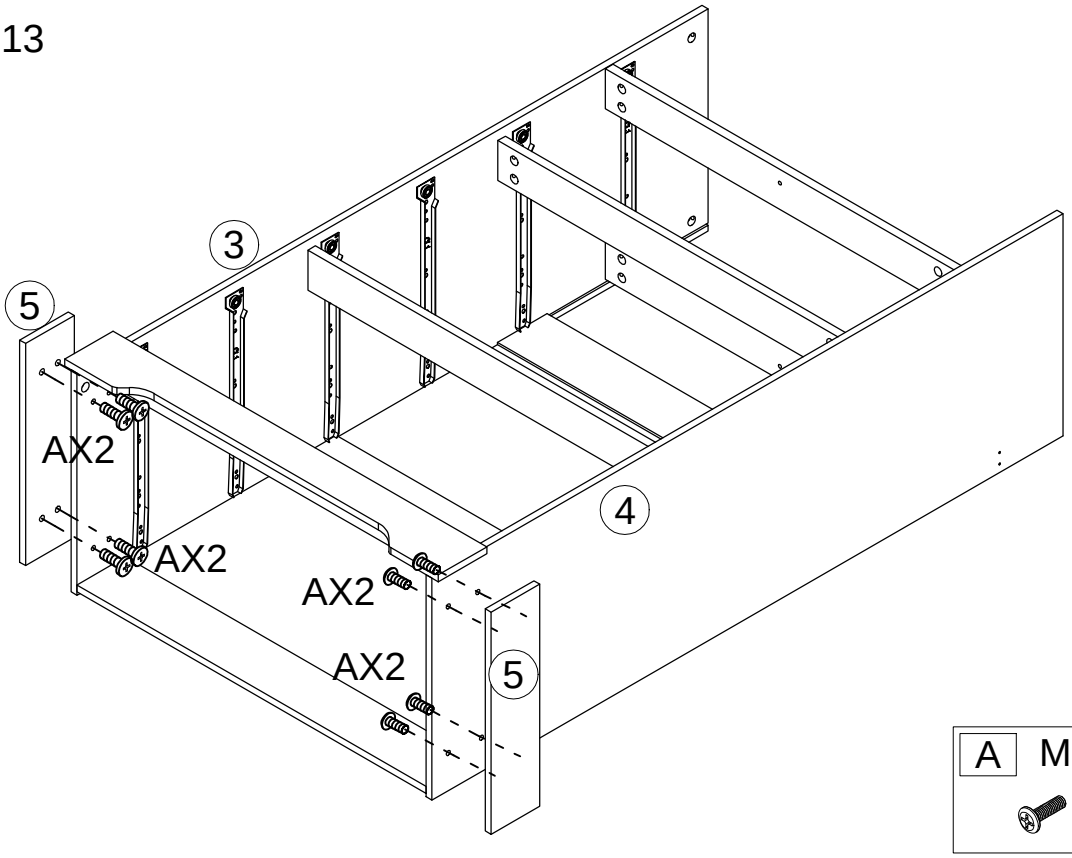

A M6*20 X8

STEP 14

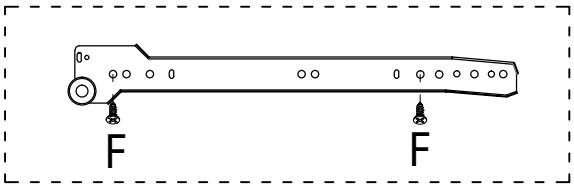

Pay attention to the hole position

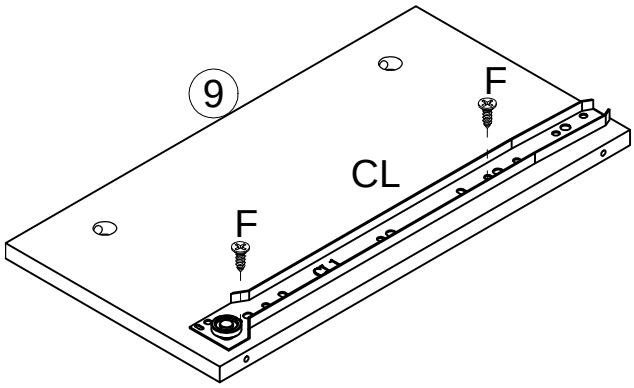

F ST3.5*12 X2

X1

ASSEMBLY INSTRUCTION

STEP 15

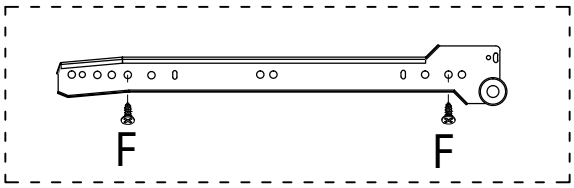



Pay attention to the hole position

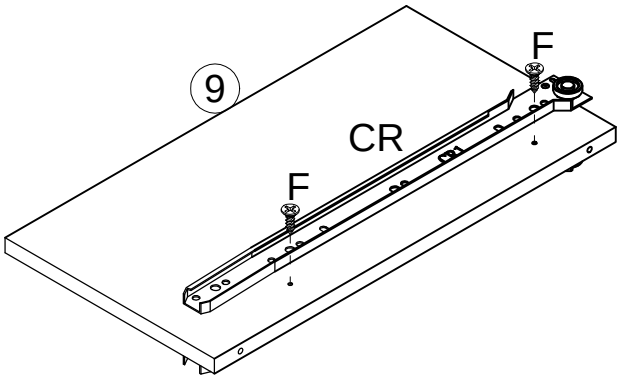

F ST3.5*12



X2



X1

STEP 16

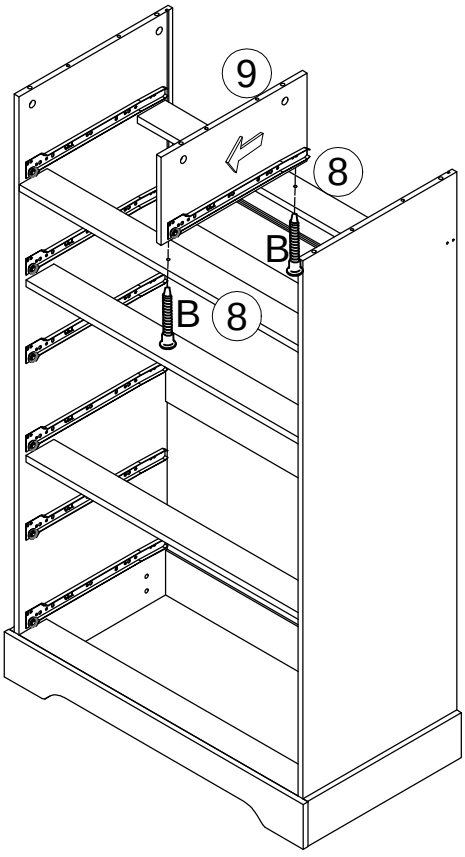

B ST5*40



X2

ASSEMBLY INSTRUCTION

STEP 17

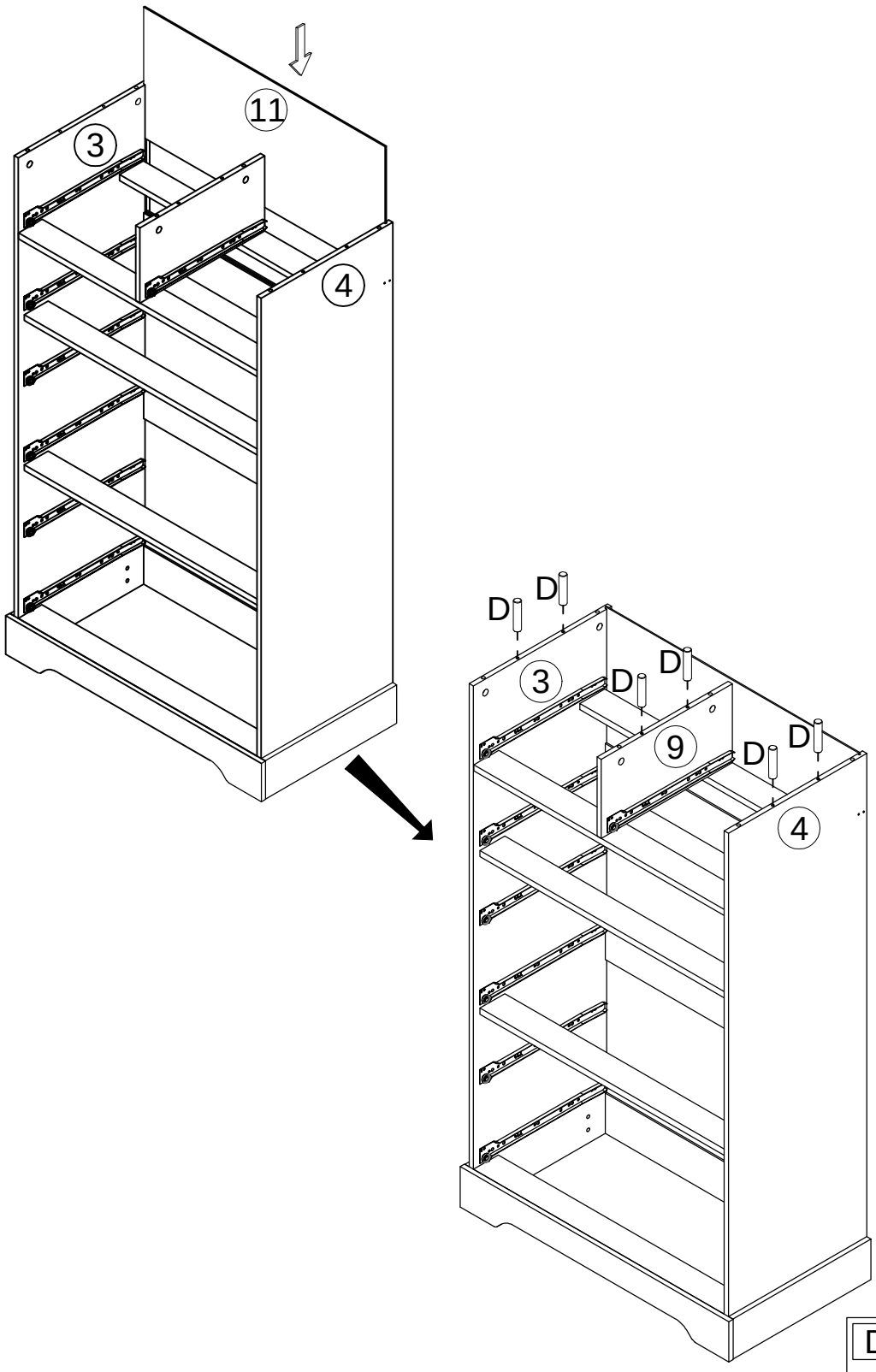

ASSEMBLY INSTRUCTION

STEP 18

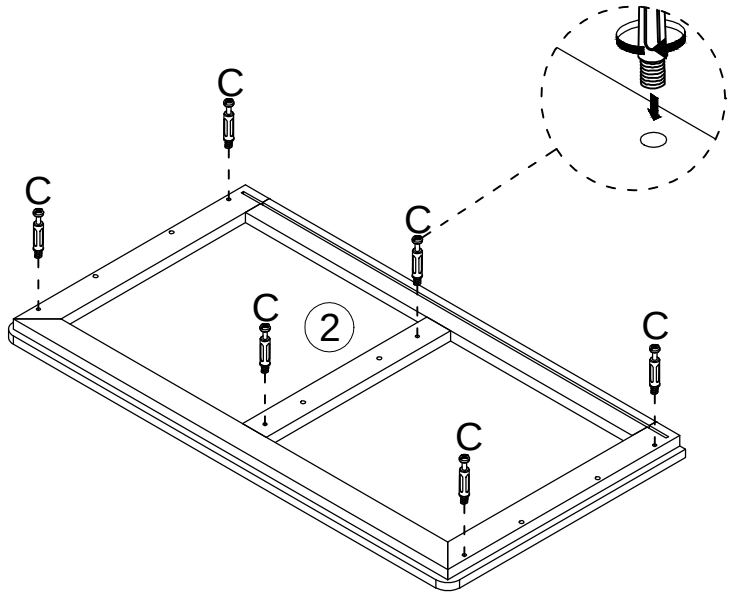

C ST6*40 X6

STEP 19

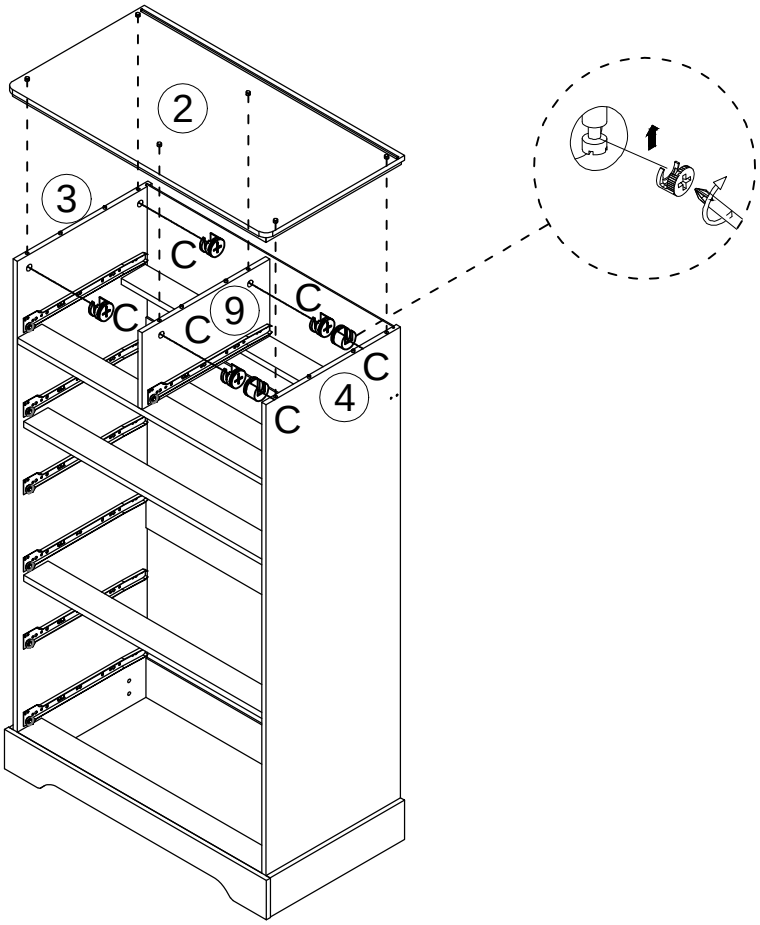

C X6

ASSEMBLY INSTRUCTION

STEP 20

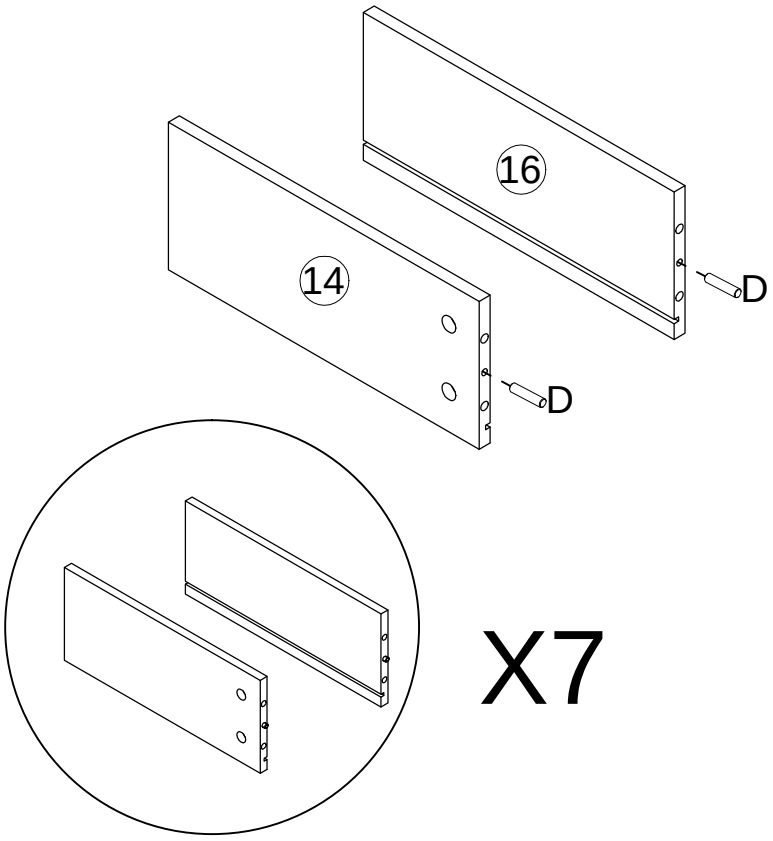

D	Ø6X35 X14

STEP 21

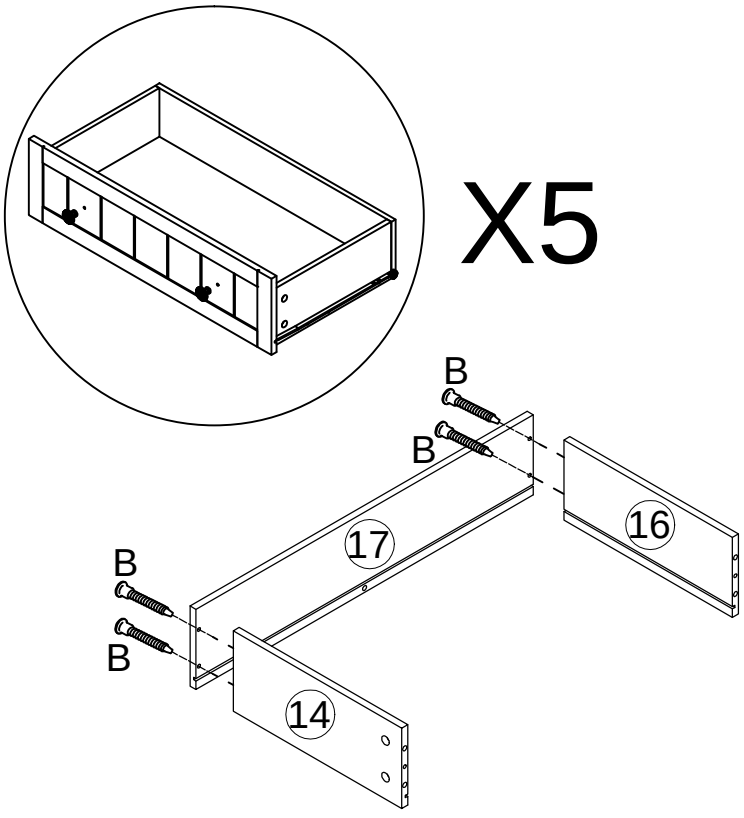

B	ST5*40 X20

ASSEMBLY INSTRUCTION

STEP 22

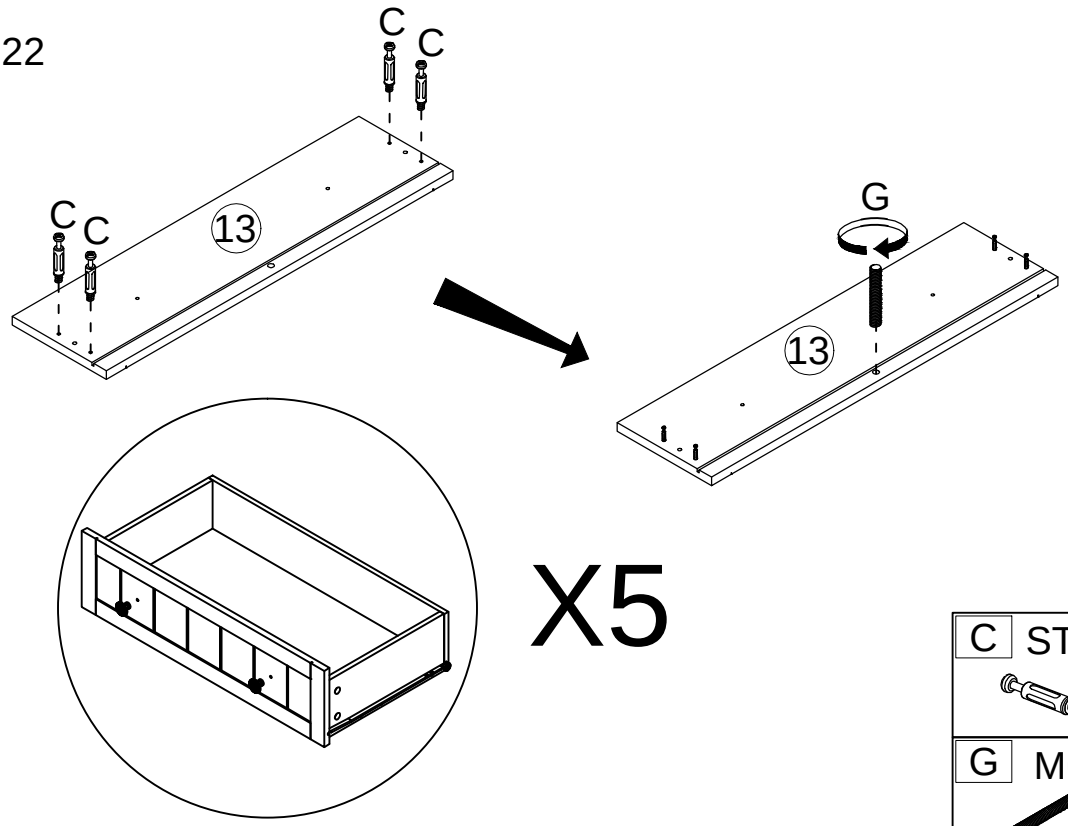

C	ST6*40 X20
G	M6*20 X5

STEP 23

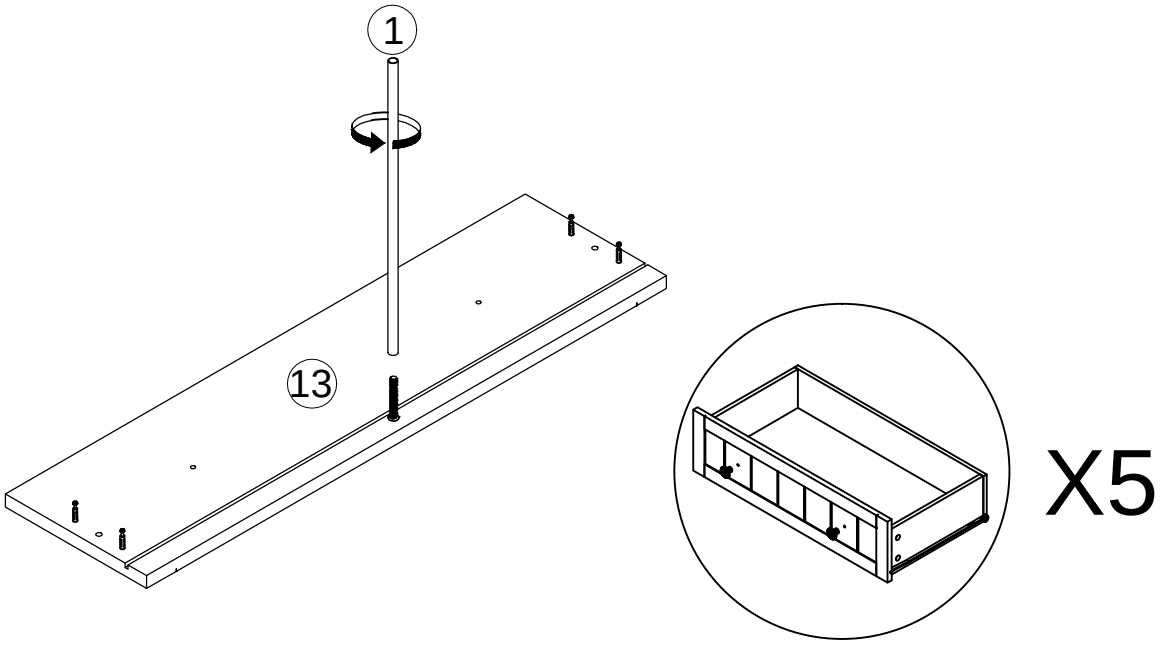

ASSEMBLY INSTRUCTION

STEP 24

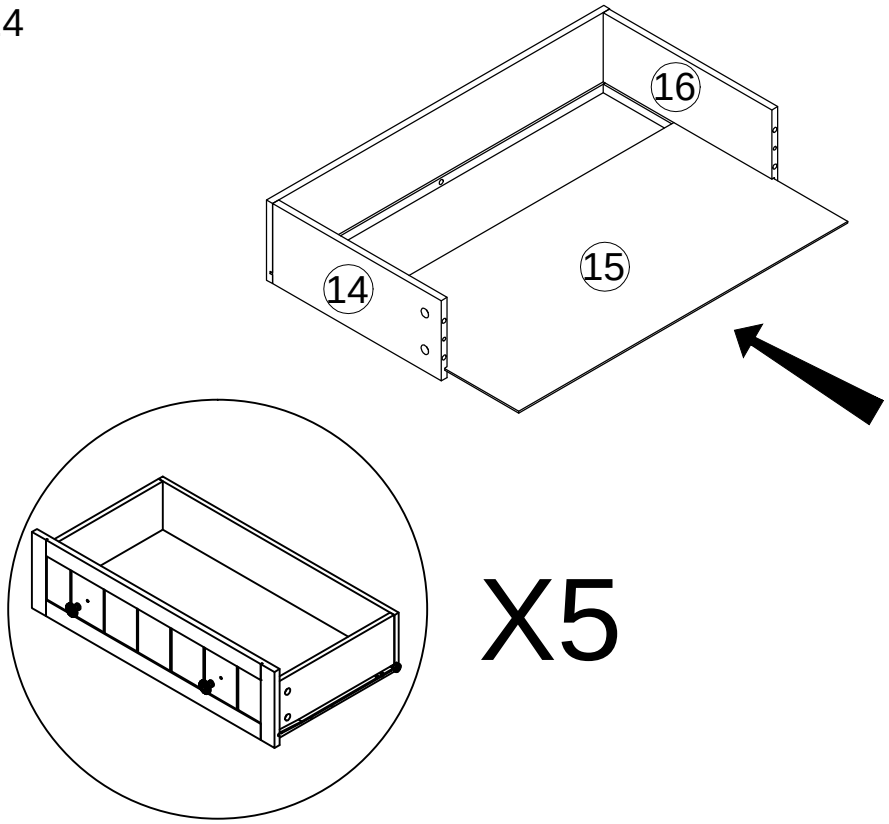

X5

STEP 25

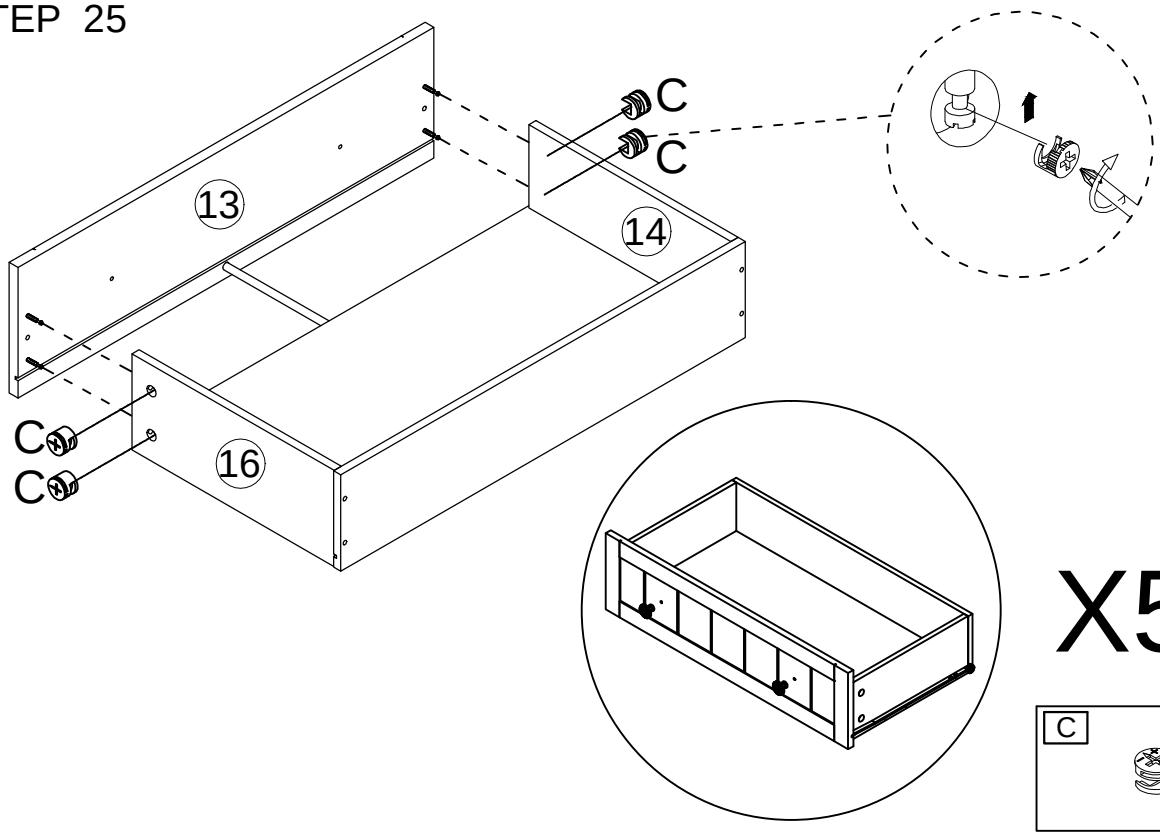

X5

C

X20

ASSEMBLY INSTRUCTION

STEP 26

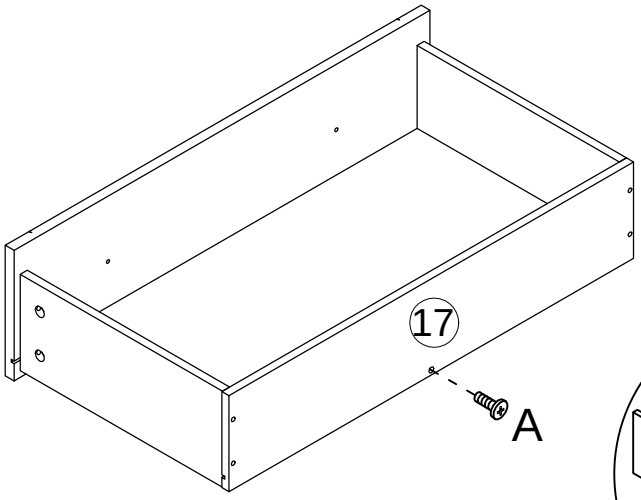

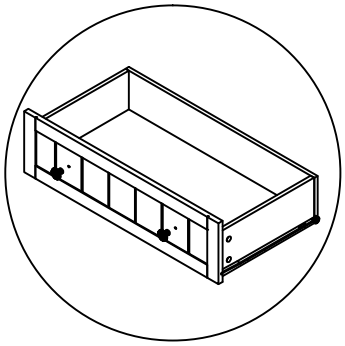

X5

A	M6*20
	X5

STEP 27

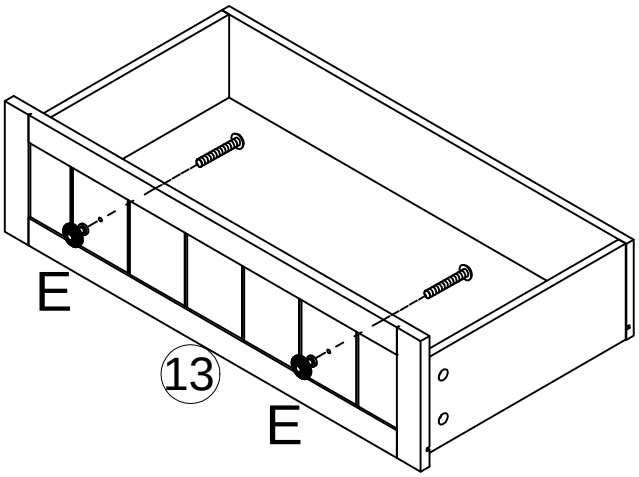

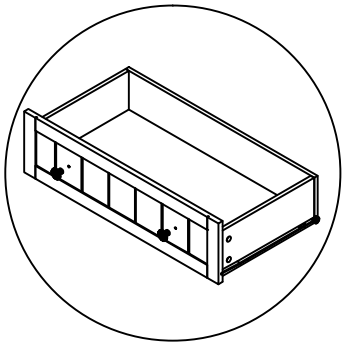

X5

E	M4*16
	X10

ASSEMBLY INSTRUCTION

STEP 28

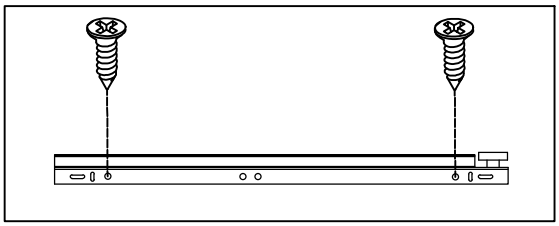

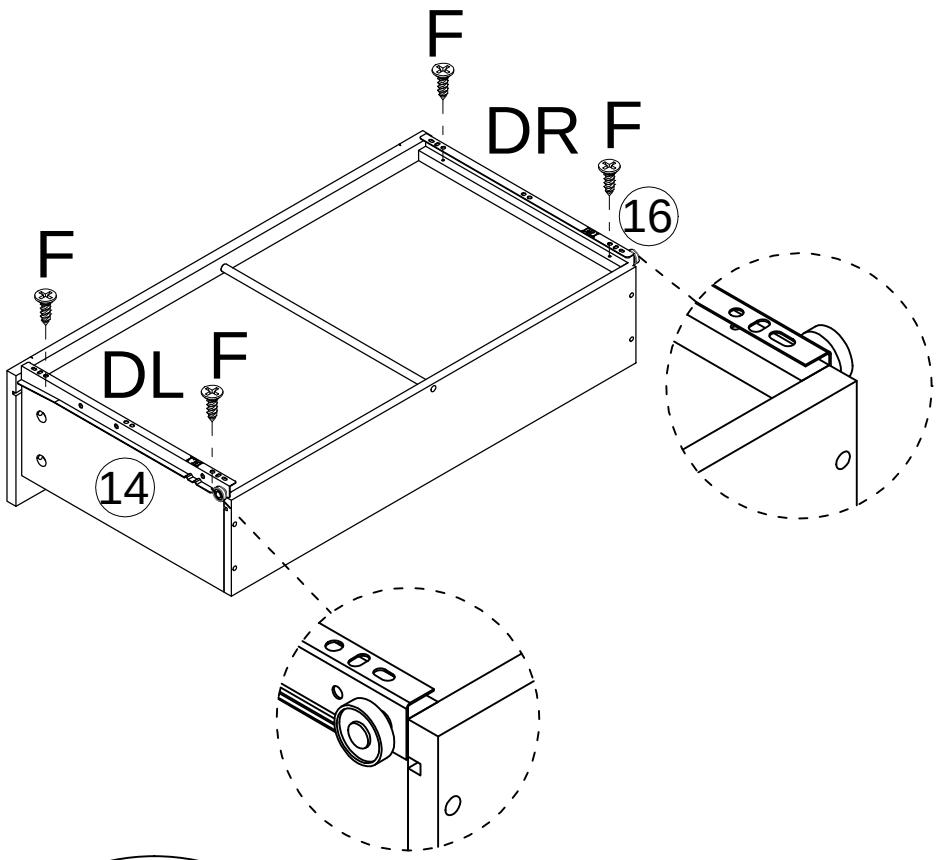

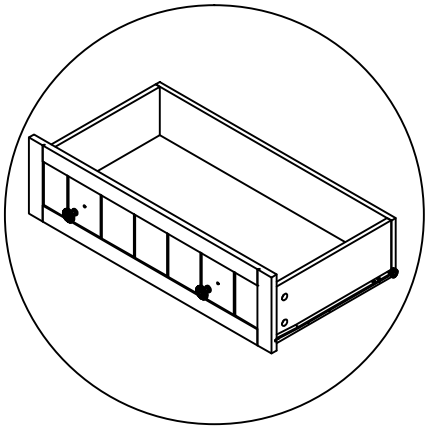

X5

F ST3.5*12	X20
	X5

ASSEMBLY INSTRUCTION

STEP 29

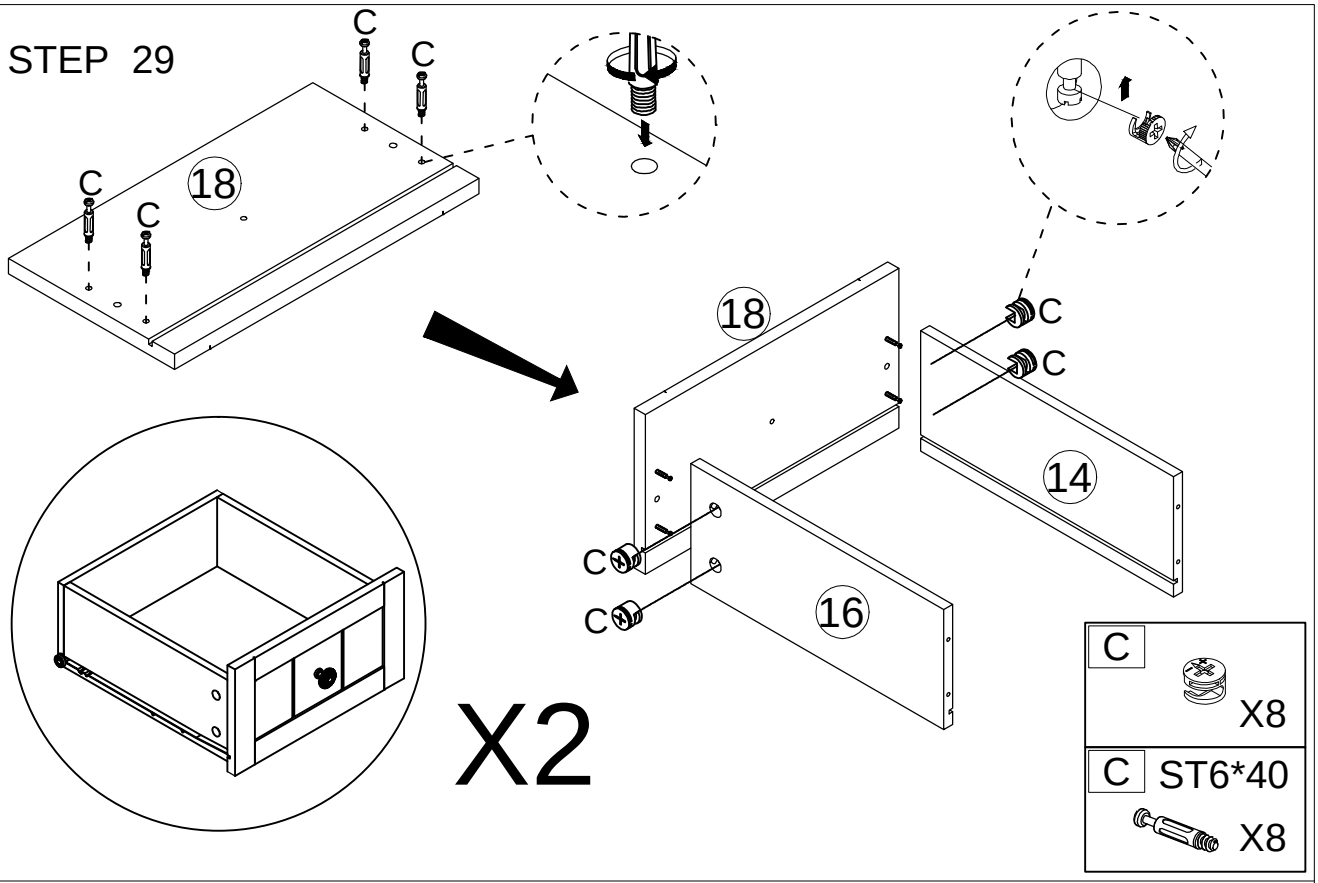

STEP 30

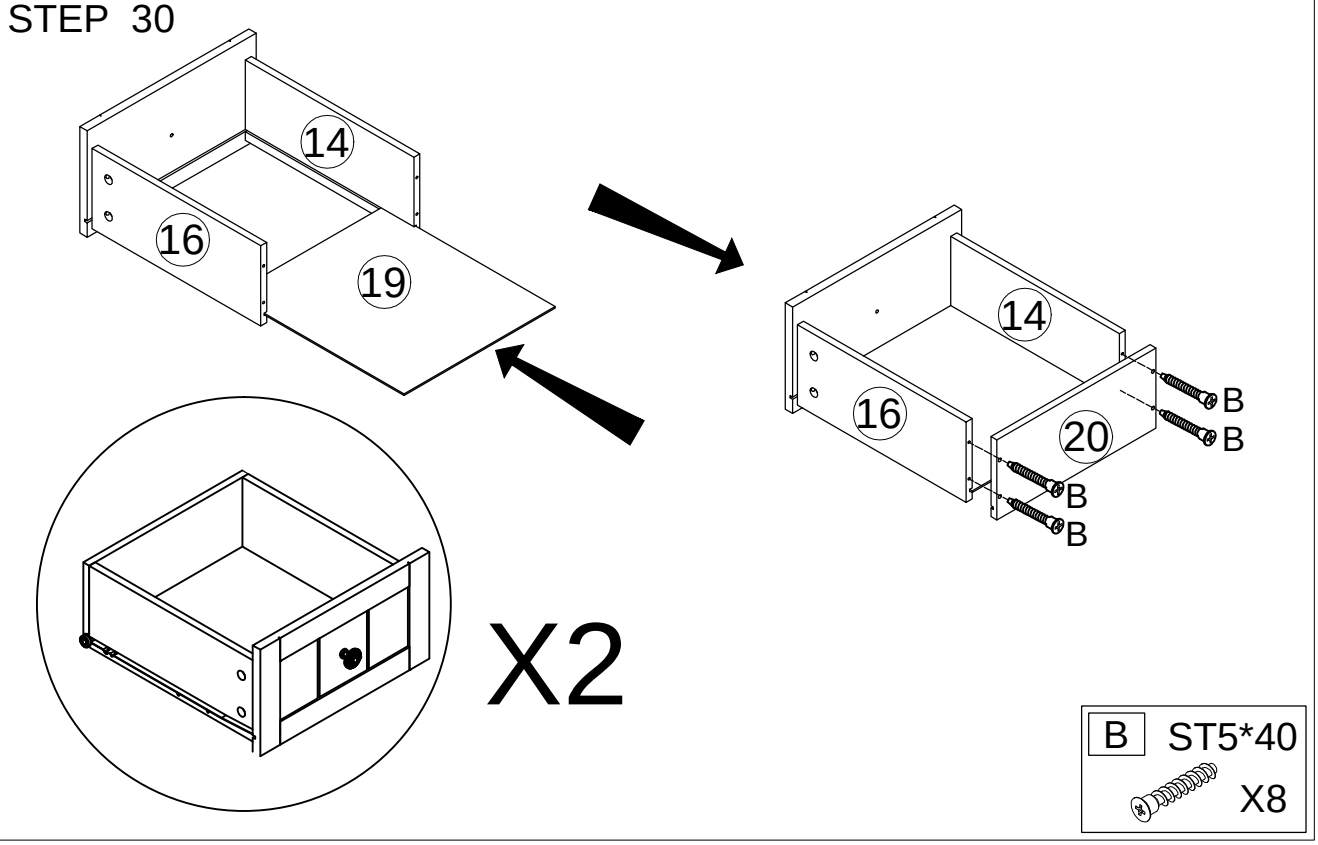

ASSEMBLY INSTRUCTION

STEP 31

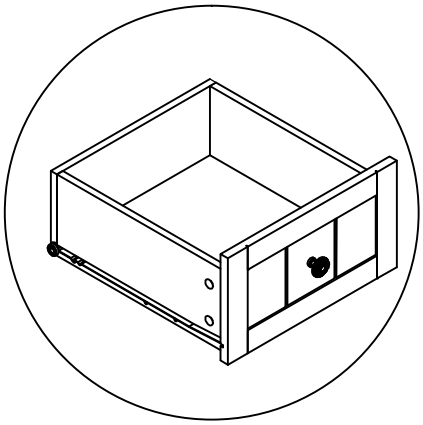

X2

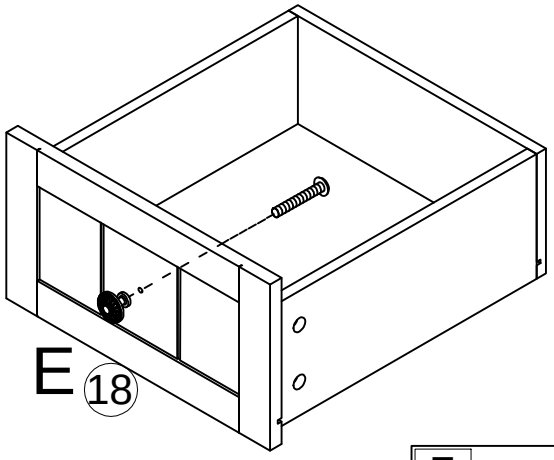

E M4*16

X2

STEP 32

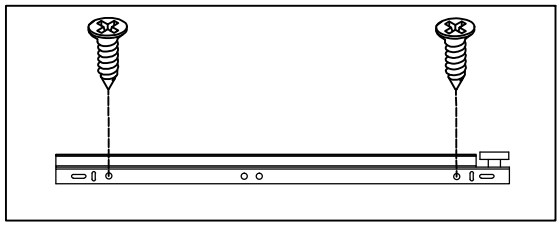

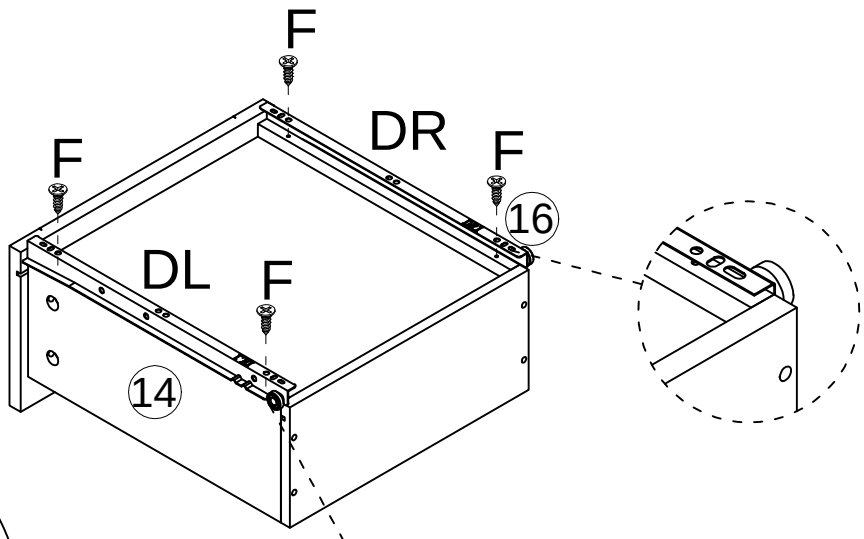

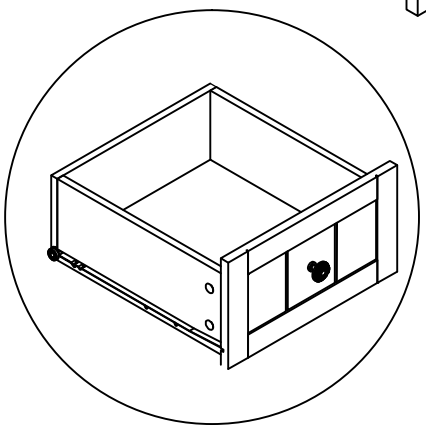

X2

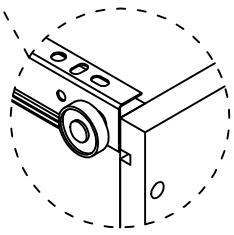

F ST3.5*12

X8

X2

STEP 33

Note that when the drawer is installed,
it is inclined upward and the bottom wheel of
the drawer is stuck in the CR or CL rail grooves.

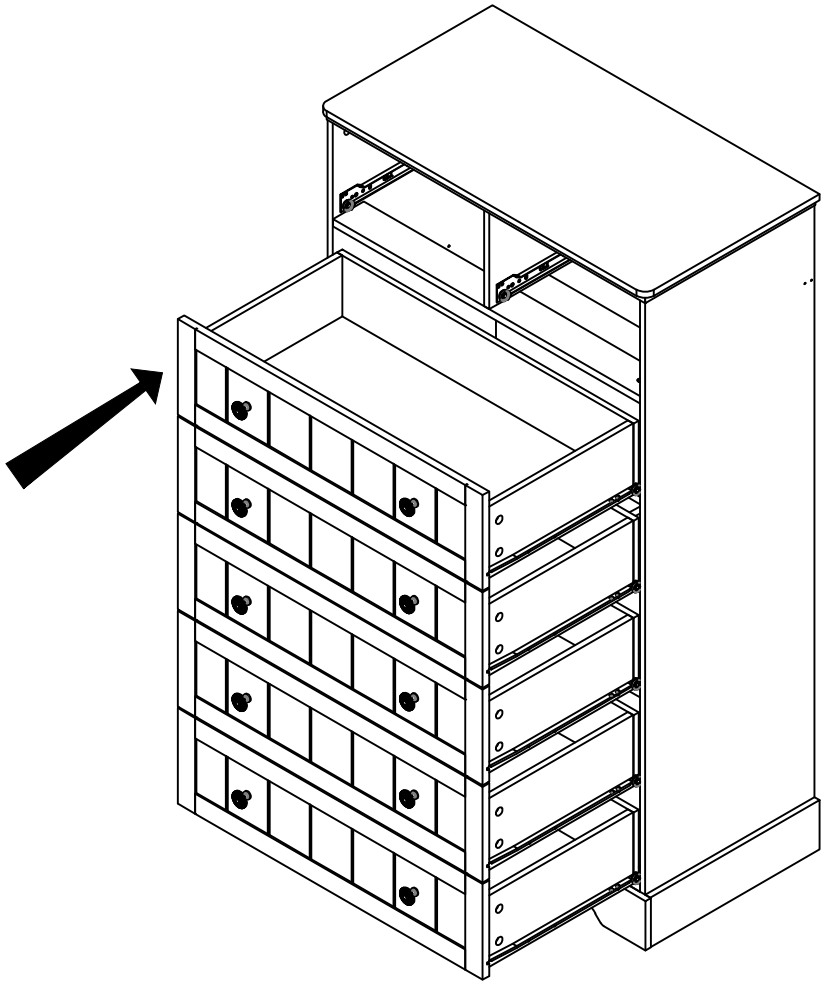

STEP 36

Note that when the drawer is installed,
it is inclined upward and the bottom wheel of
the drawer is stuck in the CR or CL rail grooves.

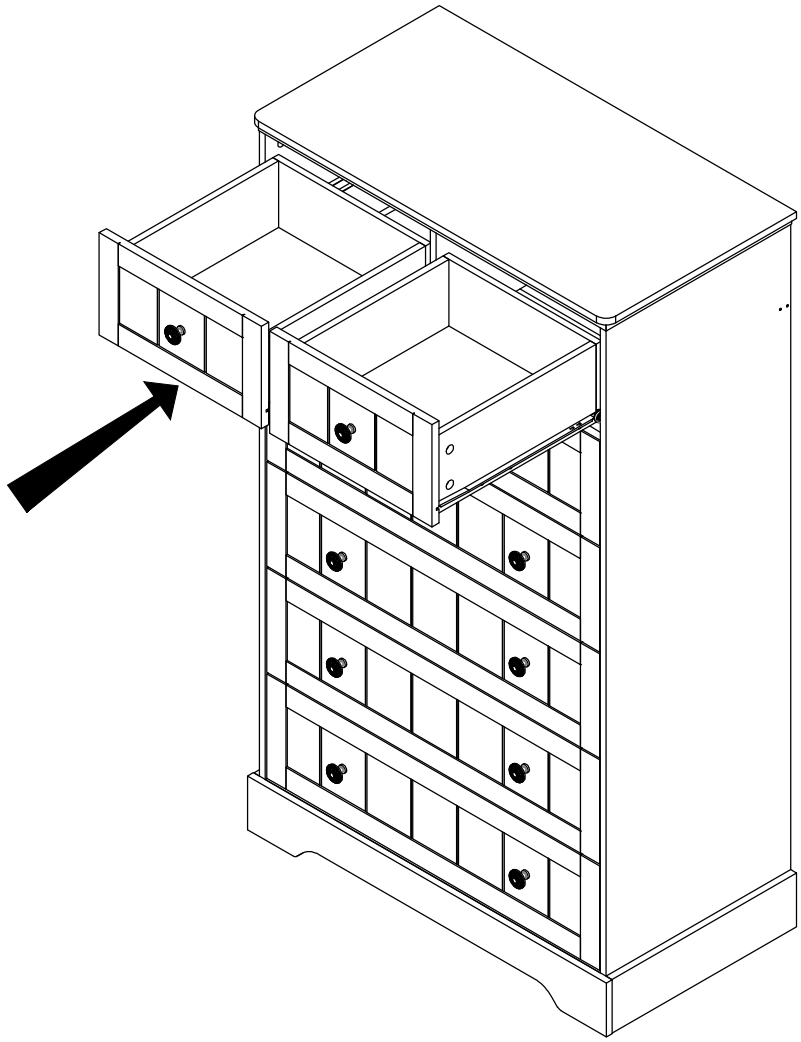

ASSEMBLY INSTRUCTION

STEP 37

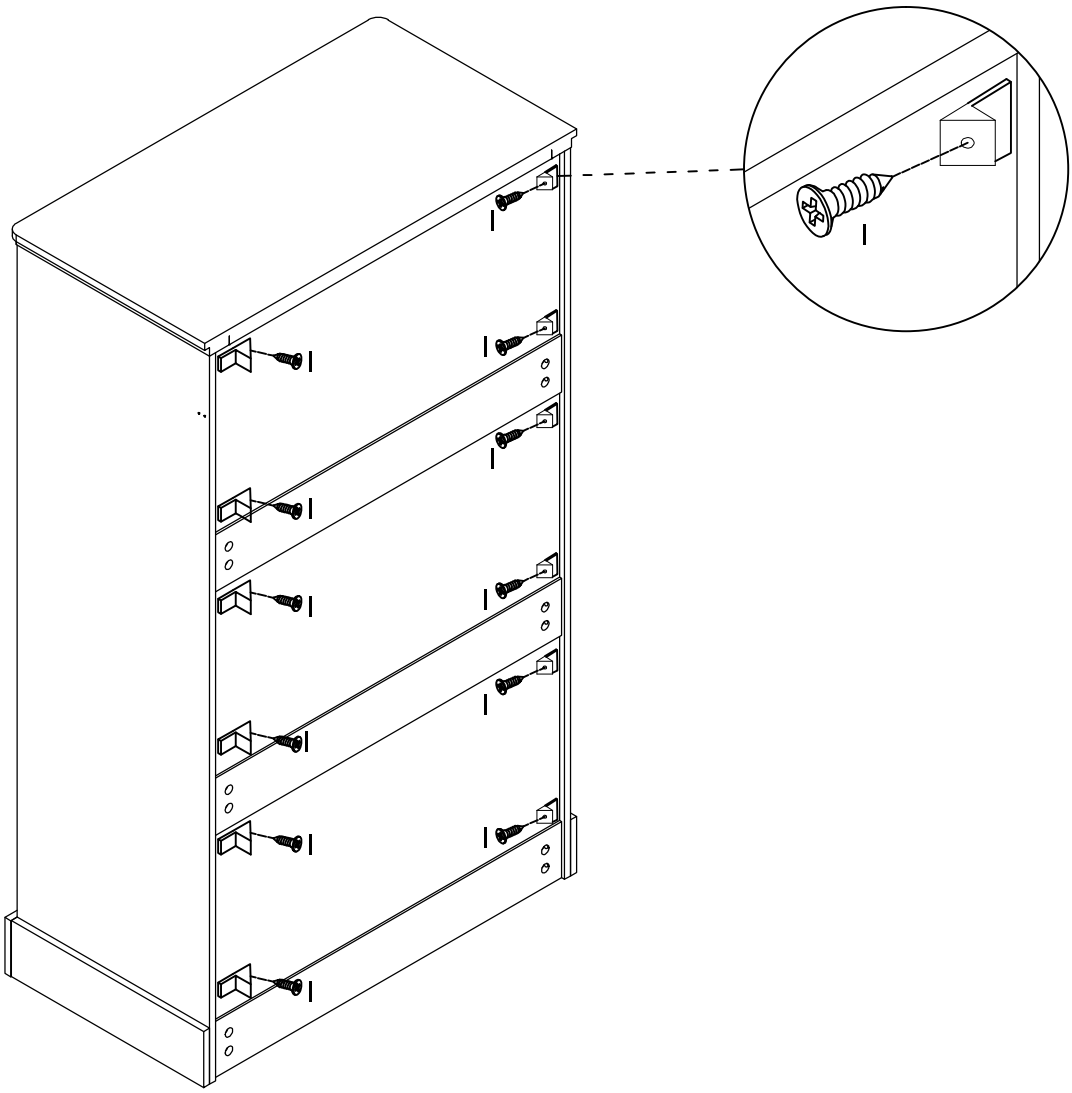

I	ST3.5*14
	X12

STEP 39

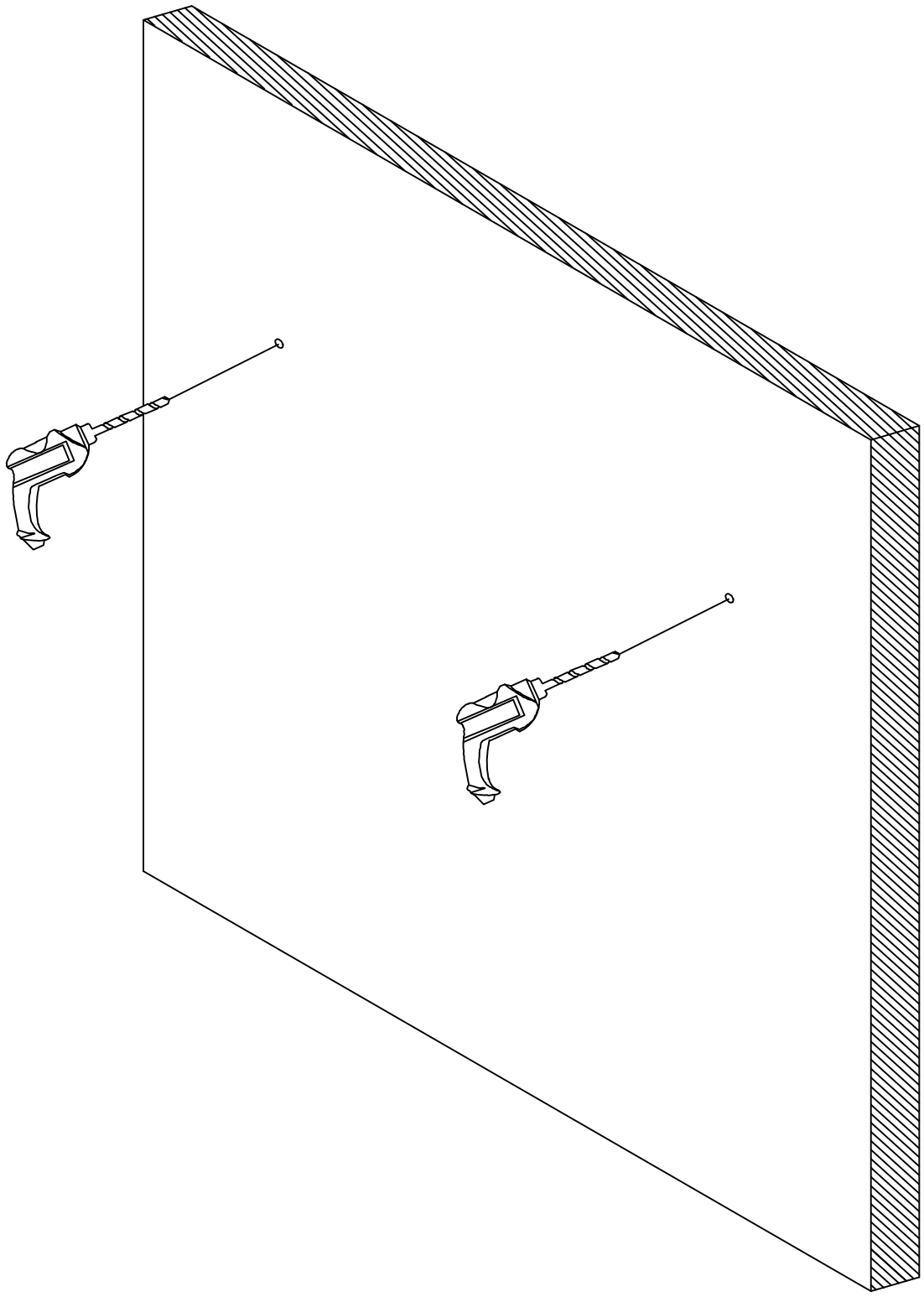

ASSEMBLY INSTRUCTION

STEP 40

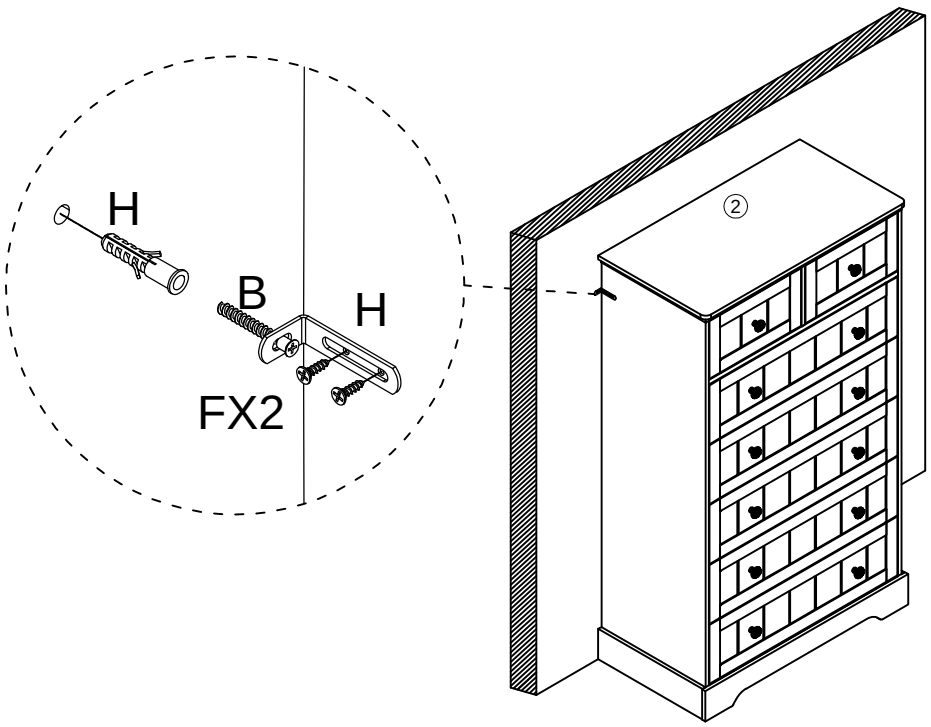

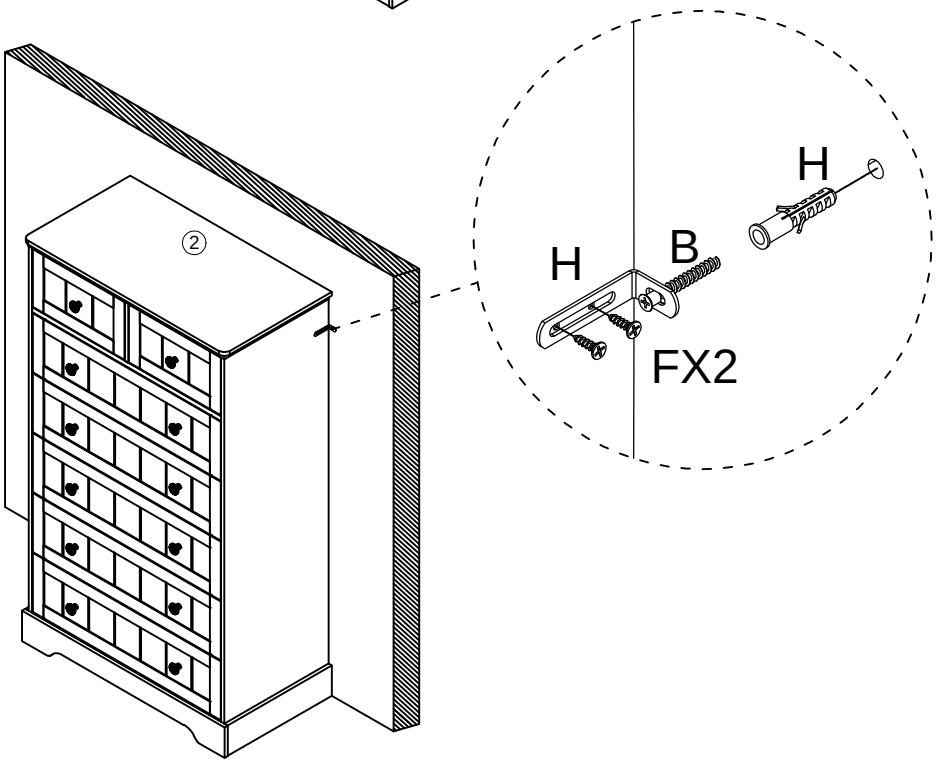

F ST3.5*12 X4	H X2	H X2	B ST5*40 X2

Customer Service

Quick Response within 24 Hours

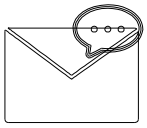

If you are still unable to resolve the issue you are experiencing, please contact us immediately via our support email.It doesn't matter if the product has been installed or not , our customer support team will respond within 24 hours and assist you quickly and efficiently.The most efficient way to confirn your problem to us is to attach a video,which illustrates your product issues.

Problems You May Encounter

PART	PROBLEM	SOLUTION
whole Product	Parts are missing, defective or having wrong parts in package.	You can contact us and we will get back to you within 24 hours
	Having issue(s) while reading the instruction or completing the assembly.	Feel free to contact us and we will get back to you within 24 hours.
	Encountering non-human caused damage during usage.	If the product is damaged due to non-human causes, please keep the product and send us photos of it. We will ascertain the cause of the product damage within 48 hours and provide you with a satisfactory solution.
Table Surface	Board Surface is broken, scratched or lack of somescrew holes.	Feel free to contact us and we will get back to you within 24 hours.
	The screw holes on the wooden board and other wooden boards are not aligned.	1.Please tighten the screws on the board by 70？, do not tighten completely. 2. Adjust the wooden board and board.Until the holes are arranged neatly, then tighten all screws
	Desktop misalignment and unevenness	1.Please tighten the screws connecting the table board to the elevator by 70%, do not tighten them completely. 2.Adjust to a flat and aligned desktop, then tighten the screws. 3.If your problem still can't be solved, please feel free to contact us.
Metal acce--ssories	Metal accessories are damaged, rusted, bent, and broken.	Feel free to contact us and we will get back to you within 24 hours.
	The table is unstable after being assembled.	1.Check if the screws are tightened. 2.Read throughout the manual, check are there any parts installed incorrectly or missing assembled. 3.If your problem still can't be solved, please feel free to contact us.
	Encountering non-human caused damage during usage.	If the product is damaged due to non-human causes, please keep the product and send us photos of it. We will ascertain the cause of the product damage within 48 hours and provide you with a satisfactory solution.

Problems You May Encounter

PART	PROBLEM	SOLUTION
whole Product	Parts are missing, defective or having wrong parts in package.	You can contact us and we will get back to you within 24 hours
	Having issue(s) while reading the instruction or completing the assembly.	Feel free to contact us and we will get back to you within 24 hours.
	Encountering non-human caused damage during usage.	If the product is damaged due to non-human causes, please keep the product and send us photos of it.We will ascertain the cause of the product damage within 48 hours and provide you with a satisfactory solution.
Table Surface	Board Surface is broken, scratched or lack of somescrew holes.	Feel free to contact us and we will get back to you within 24 hours.
	The screw holes that on the board and the steel frame don't line up.	1.Please tighten the screws on the board by 70? , do not tighten completely.□ 2. Adjusting board and steel frame until the screw holes are lined up,then tighten all the screws.
	The desk board is uneven or not tight that has gaps after being assembled.	1.Loosen the screws in the uneven or gap positions; adjust until the desktops are flat and tight, and then tighten the screws. 2.If your problem still can't be solved, please feel free to contact us.
Steel Frame	The steel frame is bent,broken,painted, rusted or damaged.	Feel free to contact us and we will get back to you within 24 hours.
	The table is unstable after being assembled.	1.Check if the screws are tightened. 2.Read throughout the manual, check are there any parts installed incorrectly or missing assembled. 3.If your problem still can't be solved, please feel free to contact us.
	Encountering non-human caused damage during usage.	If the product is damaged due to non-human causes, please keep the product and send us photos of it.We will ascertain the cause of the product damage within 48 hours and provide you with a satisfactory solution.

Problems You May Encounter

PART	PROBLEM	SOLUTION
whole Product	Parts are missing, defective or having wrong parts in package.	You can contact us and we will get back to you within 24 hours
	Having issue(s) while reading the instruction or completing the assembly.	Feel free to contact us and we will get back to you within 24 hours.
	Encountering non-human caused damage during usage.	If the product is damaged due to non-human causes, please keep the product and send us photos of it. We will ascertain the cause of the product damage within 48 hours and provide you with a satisfactory solution.
Table Surface	Board Surface is broken, scratched or lack of somescrew holes.	Feel free to contact us and we will get back to you within 24 hours.
	The screw holes on the wooden board and other wooden boards are not aligned.	1.Please tighten the screws on the board by 70？, do not tighten completely. 2. Adjust the wooden board and board.Until the holes are arranged neatly, then tighten all screws
	Desktop misalignment and unevenness	1.Please tighten the screws connecting the table board to the elevator by 70%, do not tighten them completely. 2.Adjust to a flat and aligned desktop, then tighten the screws. 3.If your problem still can't be solved, please feel free to contact us.
Metal acce-- ssories	Metal accessories are damaged, rusted, bent, and broken.	Feel free to contact us and we will get back to you within 24 hours.
	The table is unstable after being assembled.	1.Check if the screws are tightened. 2.Read throughout the manual, check are there any parts installed incorrectly or missing assembled. 3.If your problem still can't be solved, please feel free to contact us.
	Encountering non-human caused damage during usage.	If the product is damaged due to non-human causes, please keep the product and send us photos of it. We will ascertain the cause of the product damage within 48 hours and provide you with a satisfactory solution.

Problems You May Encounter

PART	PROBLEM	SOLUTION
Cloth drawers	Why use cloth drawers	1.Reducing tree extraction is more environmentally friendly 2. More convenient to use and assemble 3.Reduced the thickness of the side panel, resulting in a larger actual storage space
whole Product	Parts are missing, defective or having wrong parts in package.	You can contact us and we will get back to you within 24 hours
	Having issue(s) while reading the instruction or completing the assembly.	Feel free to contact us and we will get back to you within 24 hours.
	Encountering non-human caused damage during usage.	If the product is damaged due to non-human causes, please keep the product and send us photos of it.We will ascertain the cause of the product damage within 48 hours and provide you with a satisfactory solution.
Table Surface	Board Surface is broken, scratched or lack of somescrew holes.	Feel free to contact us and we will get back to you within 24 hours.
	The screw holes that on the board and the steel frame don't line up.	1.Please tighten the screws on the board by 70? , do not tighten completely. 2. Adjusting board and steel frame until the screw holes are lined up,then tighten all the screws.
	The desk board is uneven or not tight that has gaps after being assembled.	1.Loosen the screws in the uneven or gap positions; adjust until the desktops are flat and tight, and then tighten the screws. 2.If your problem still can't be solved, please feel free to contact us.
Steel Frame	The steel frame is bent,broken,painted, rusted or damaged.	Feel free to contact us and we will get back to you within 24 hours.
	The table is unstable after being assembled.	1.Check if the screws are tightened. 2.Read throughout the manual, check are there any parts installed incorrectly or missing assembled. 3.If your problem still can't be solved, please feel free to contact us.
	Encountering non-human caused damage during usage.	If the product is damaged due to non-human causes, please keep the product and send us photos of it.We will ascertain the cause of the product damage within 48 hours and provide you with a satisfactory solution.

MADE IN CHINA

Create a more relaxing office space

Thank you for choosing our product