FDYWC008BS
FDYWC008GS

Assembly Instructions

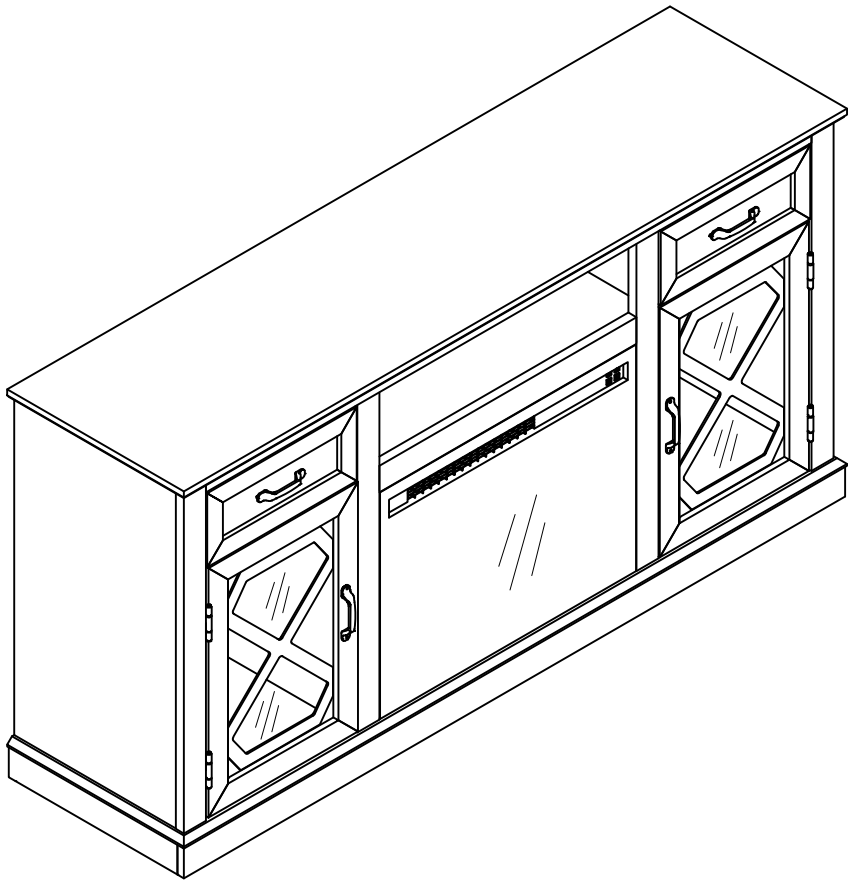

Parts List

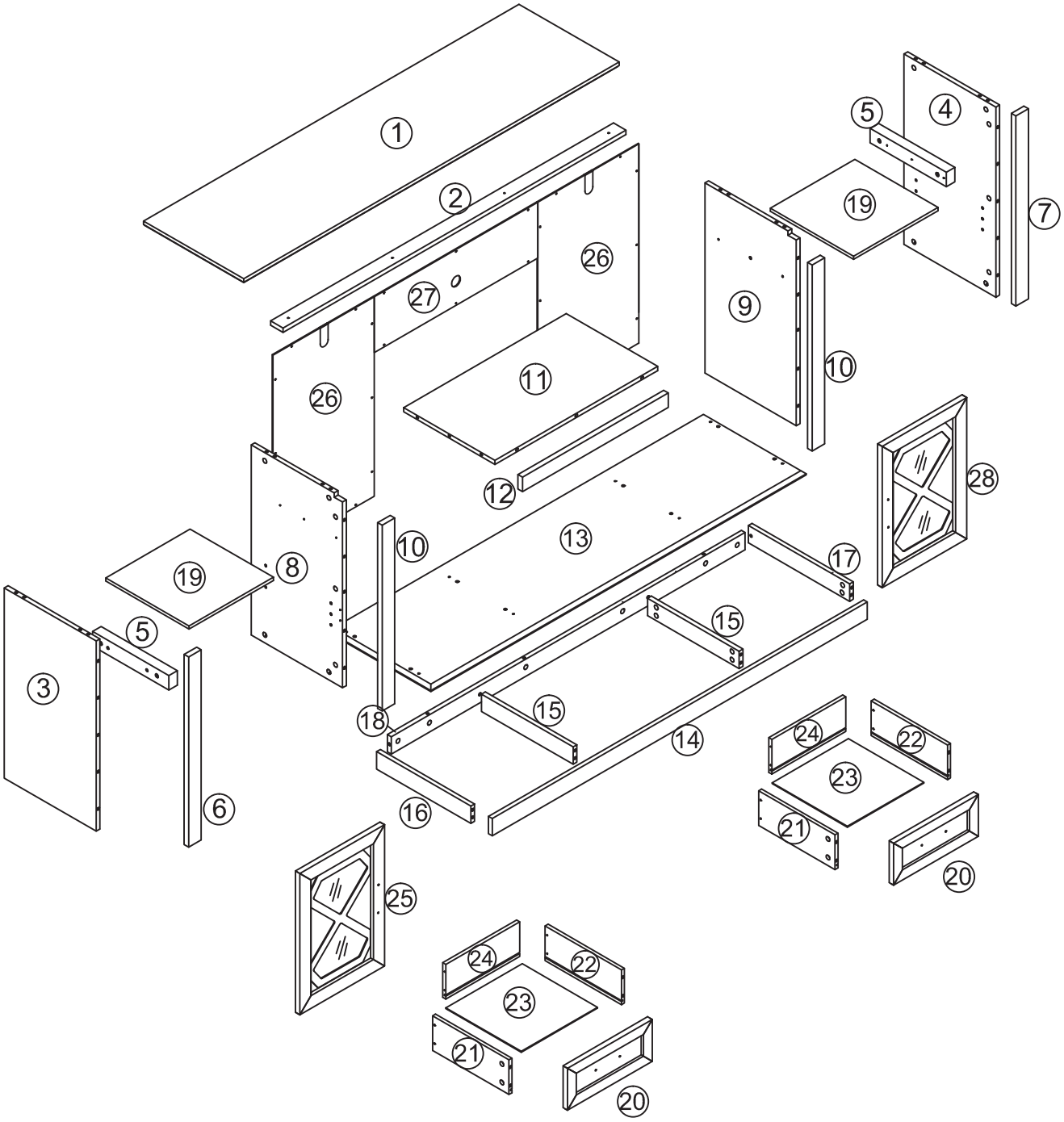
1
2
26
27
26
11
12
13
10
8
19
5
3
6
18
15
15
14
16
17
9
10
19
5
4
7
28
24
22
23
21
20
25
24
22
23
21
20

Hardware

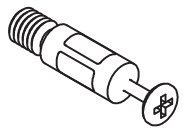

A x 71+2pcs

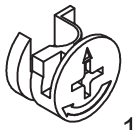

15X9.5MM

B x 71+2pcs

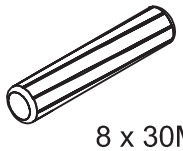

8 x 30MM

C x 32 +2pcs



D x 8pcs

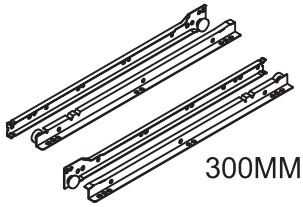

300MM

E x 2sets

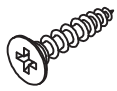

3 x 12MM

F x 20+2pcs

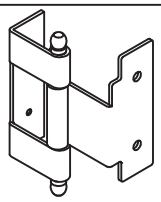

G x 4pcs

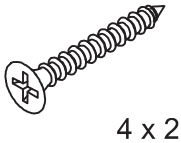

4 x 25MM

H x 4pcs

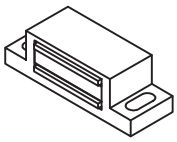

J x 2pcs

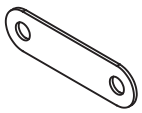

K x 2pcs

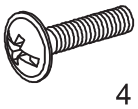

4 x 12MM

L x 4pcs

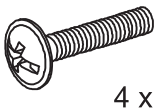

4 x 22MM

M x 4pcs



N x 4pcs

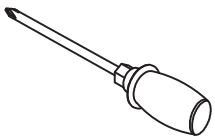

O x 1pc

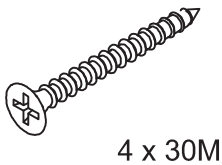

4 x 30MM

P x 12 pcs

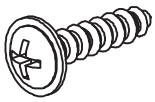

3.5 x 16MM

Q x 26+2pcs

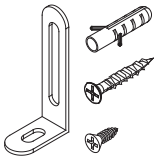

R x2sets

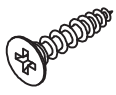

3.5 x 14MM

S x 20+2pcs

ASSEMBLY MATERIAL

Item no.	Reference Image	Oty.
1	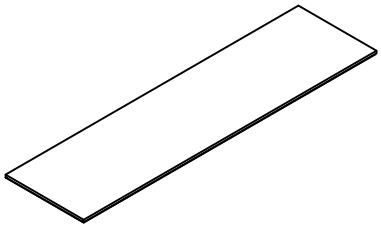	X1
2	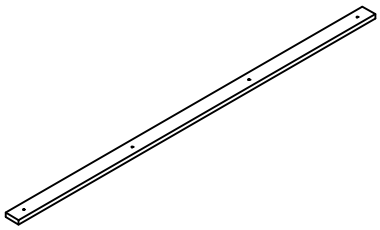	X1
3	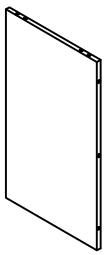	X1
4	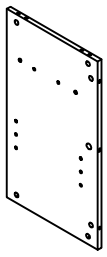	X1
5	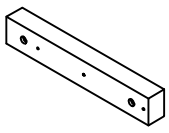	X2
6	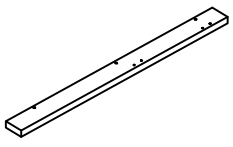	X1
7	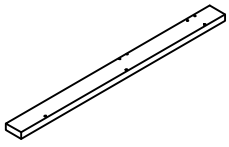	X1

Item no.	Reference Image	Oty.
8	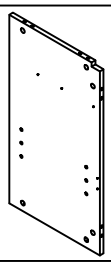	X1
9	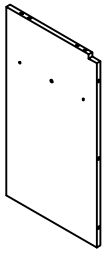	X1
10	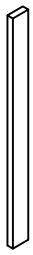	X2
11	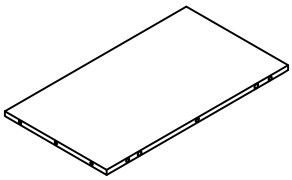	X1
12	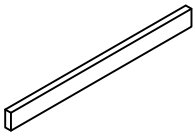	X1
13	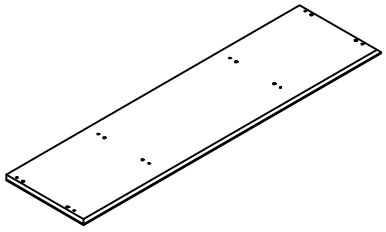	X1
14	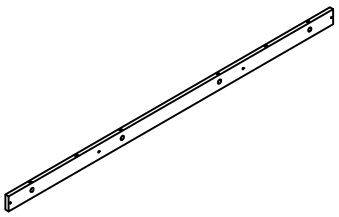	X1

ASSEMBLY MATERIAL

Item no.	Reference Image	Oty.
15	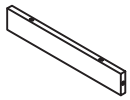	X2
16	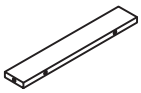	X1
17	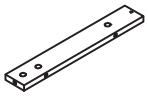	X1
18	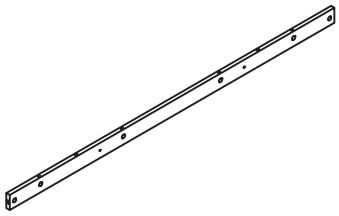	X1
19	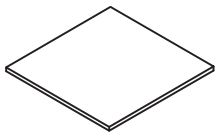	X2
20	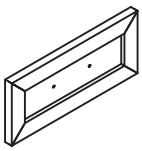	X2
21	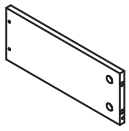	X2

Item no.	Reference Image	Oty.
22	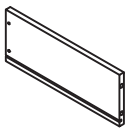	X2
23	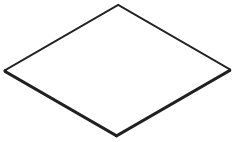	X2
24	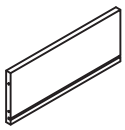	X2
25	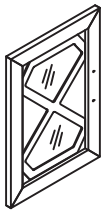	X1
26	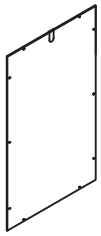	X2
27	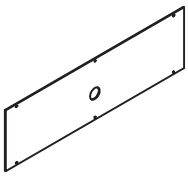	X1
28	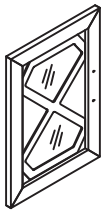	X1

How to use the cam lock system

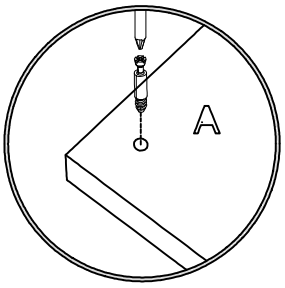

1.Screw cam bolt into panel

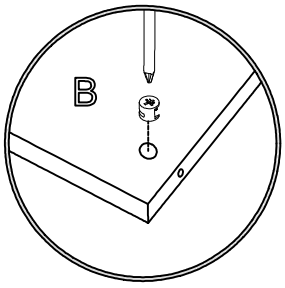

2.Push cam into panel - arrow feature on cam top points to panel edge

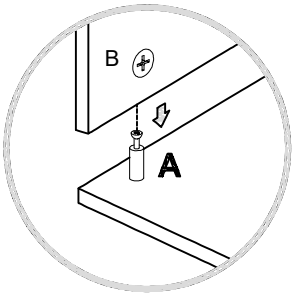

3.Aligu cam bolt(s) with cam(s) and insert all the way into cross-bored hole(s)

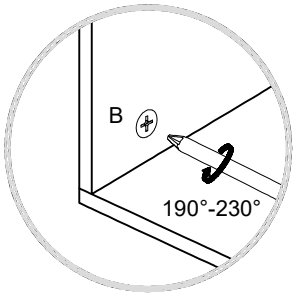

3.Rotate cam(s) clockwise 190°-230° to lock panels together

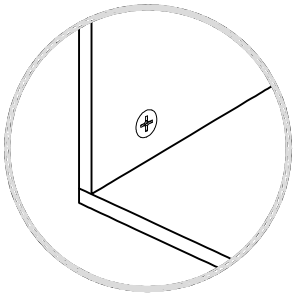

5.Panels should be tight against each other and connection should be rigid

Insert the wood dowel [C] at least half way by tapping lightly with a rubber mallet ,IF NECESSARY.

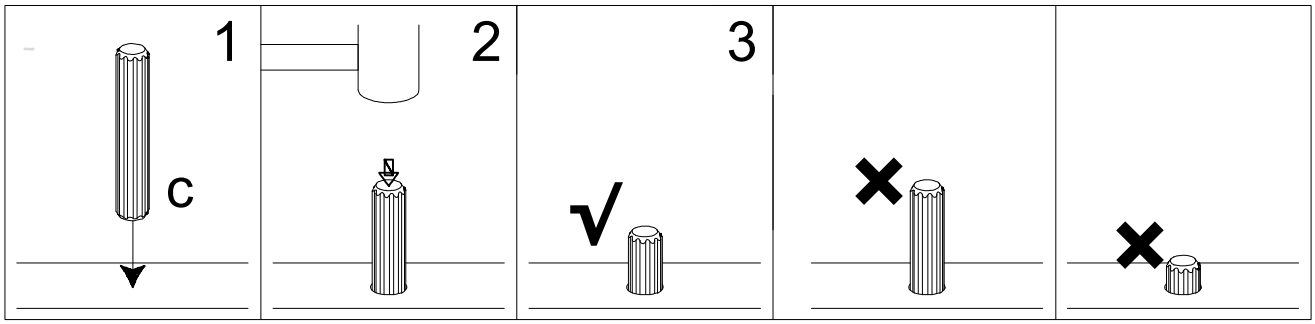

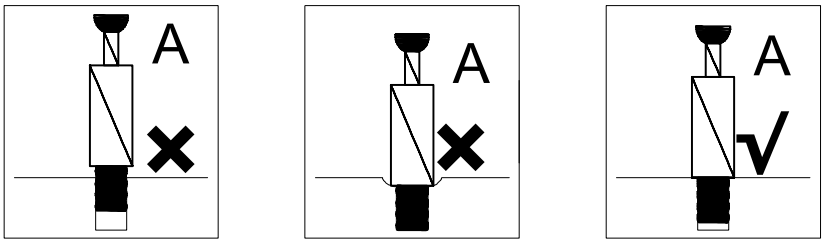

- Unit must be placed on a level surface or leveled with included hardware (when applicable).
- Do not sit or stand on or allow children to climb,sit or stand on the assembled product.
- For safety reasons,it is imperative that this unit be mounted to the wall.
- Do not use without installing the tip restraint.
- Unit can tip over causing severe injury or death.
- Do not exceed the recommended weight limits.
- Evenly distribute the weight on each level and always keep the heavier loads on the bottom.
- Before cutting,drilling or hammering into any wall or floor surface,verify the location of electrical, plumbing and gas lines.Cutting may cause serious injury.

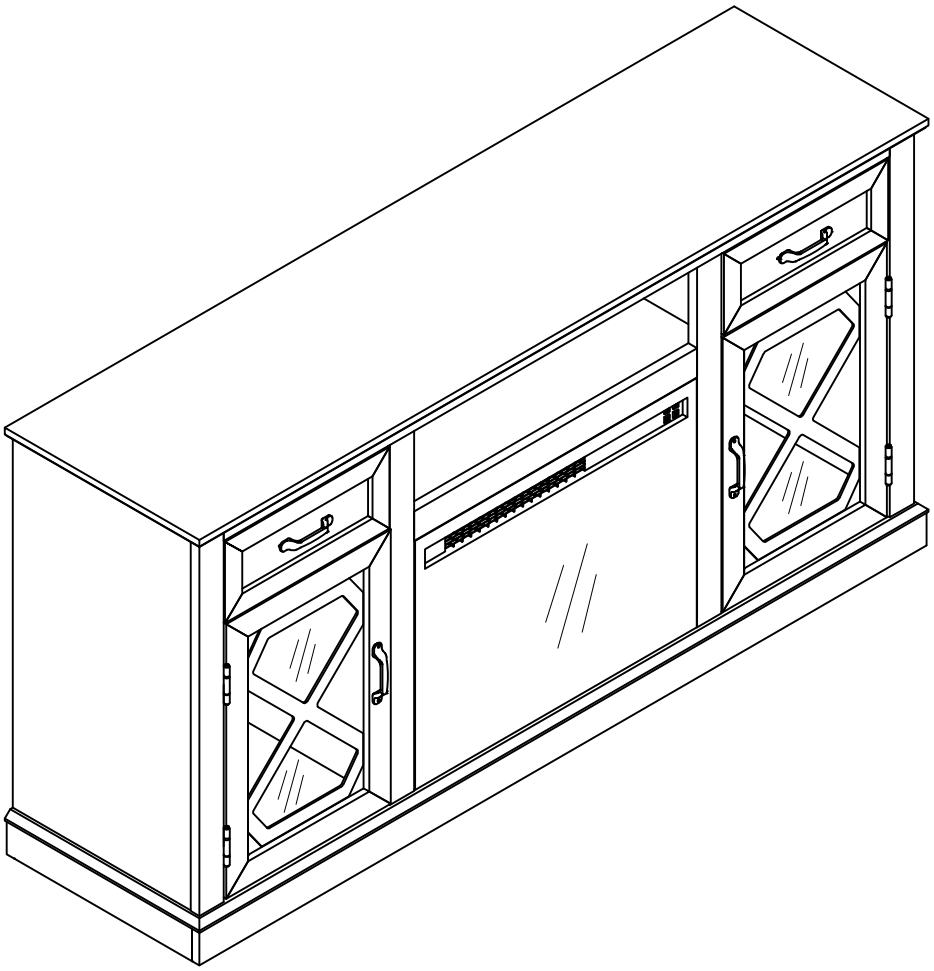

Step 1

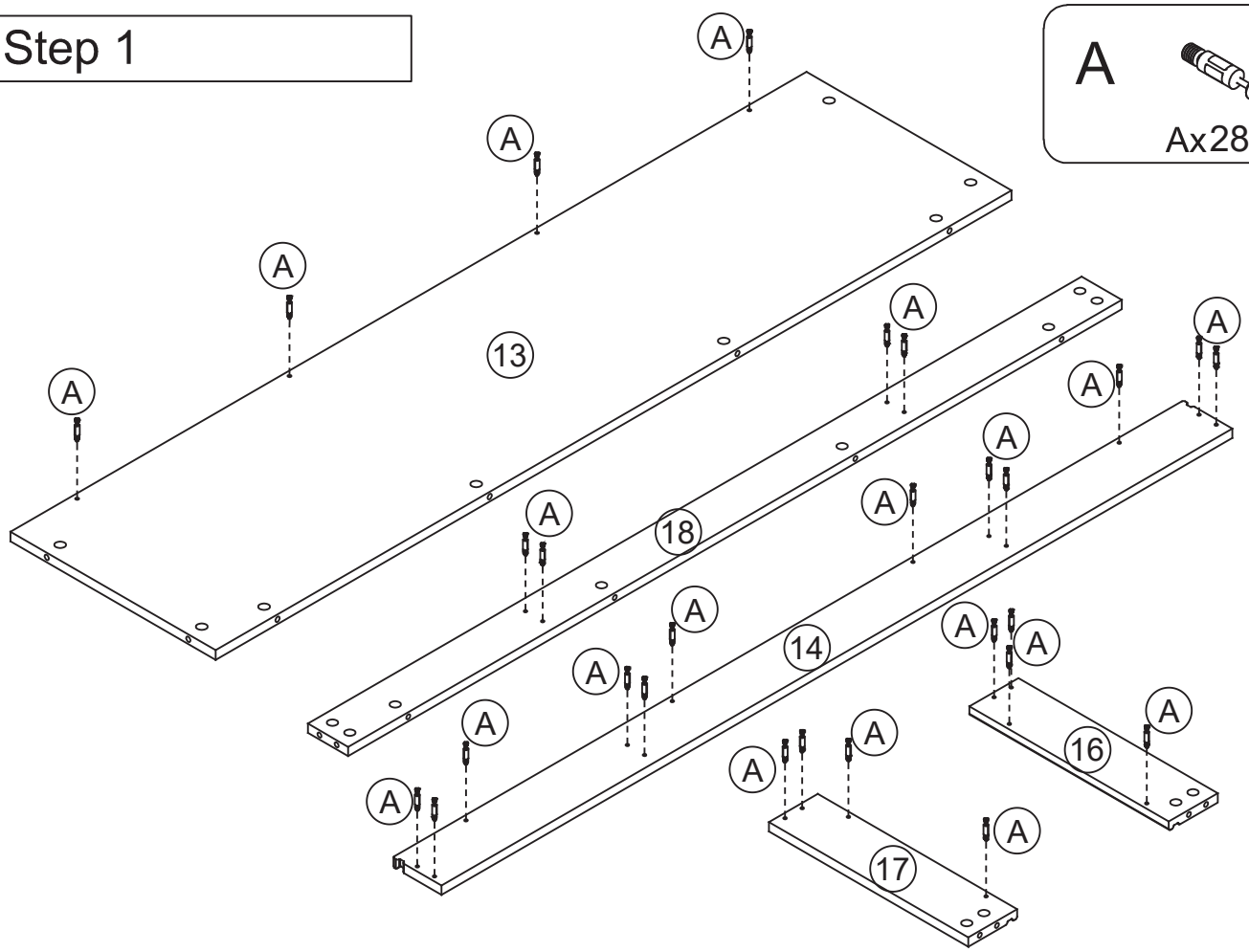

A

Ax28

Step 2

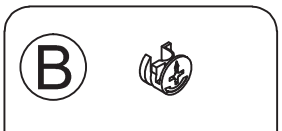

B

BX4

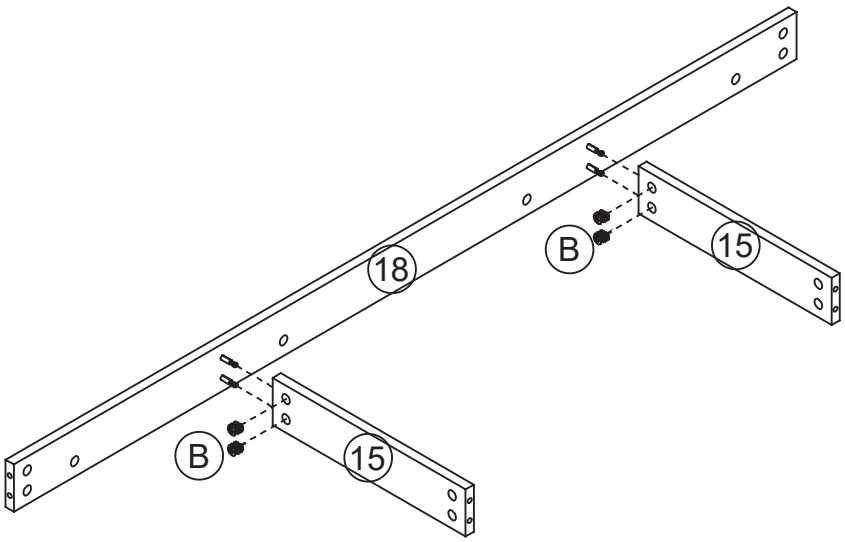

Step 3

B

BX8

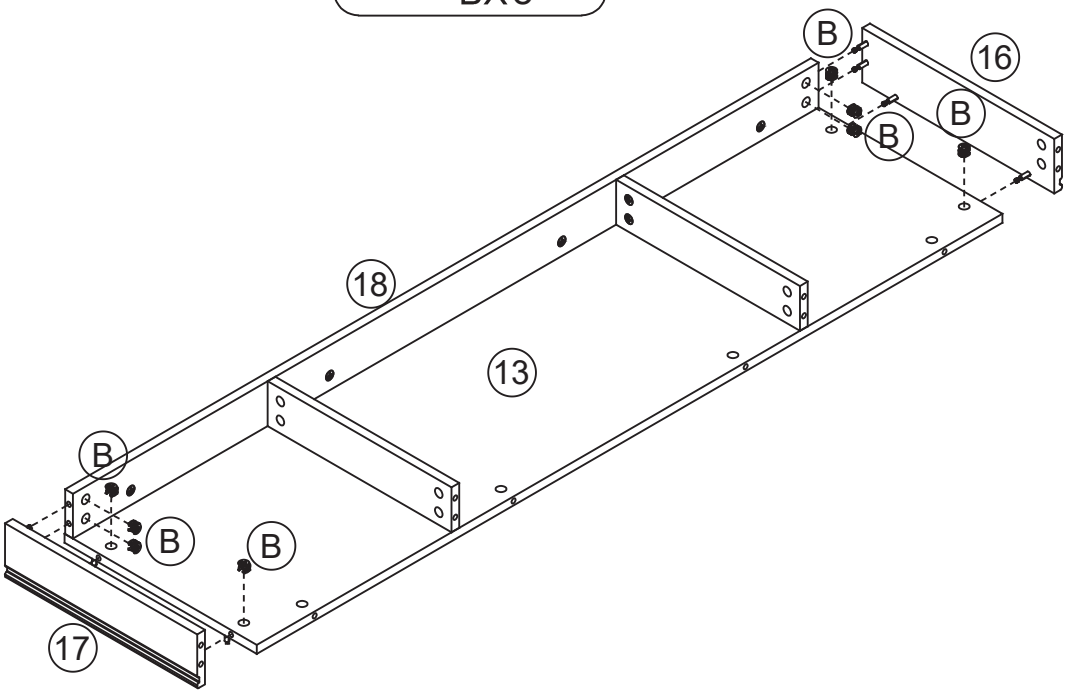

Step 4

B

BX12

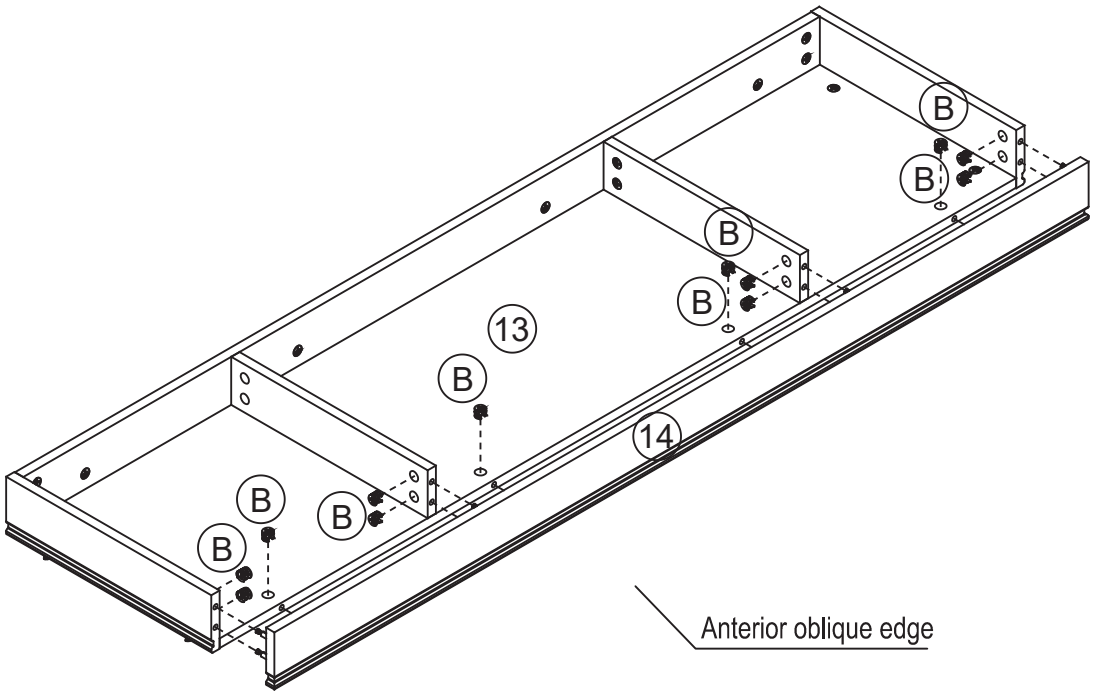

Step 5

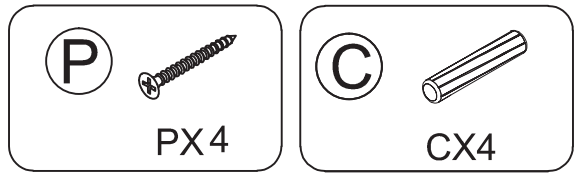
P
PX4
C
CX4

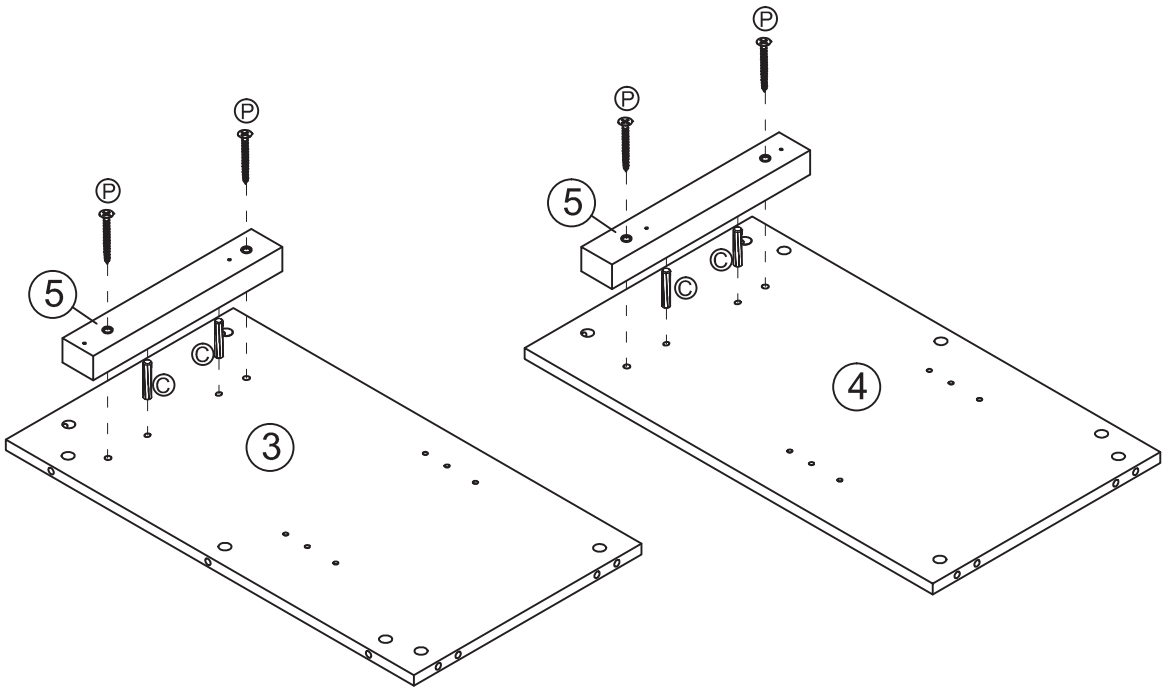
P
5
C
3
4

Step 6

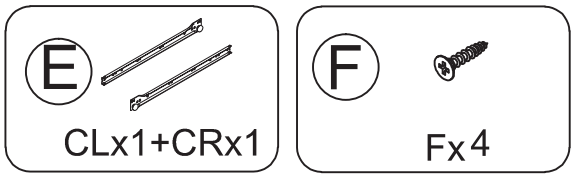
E
CLx1+CRx1
F
Fx4

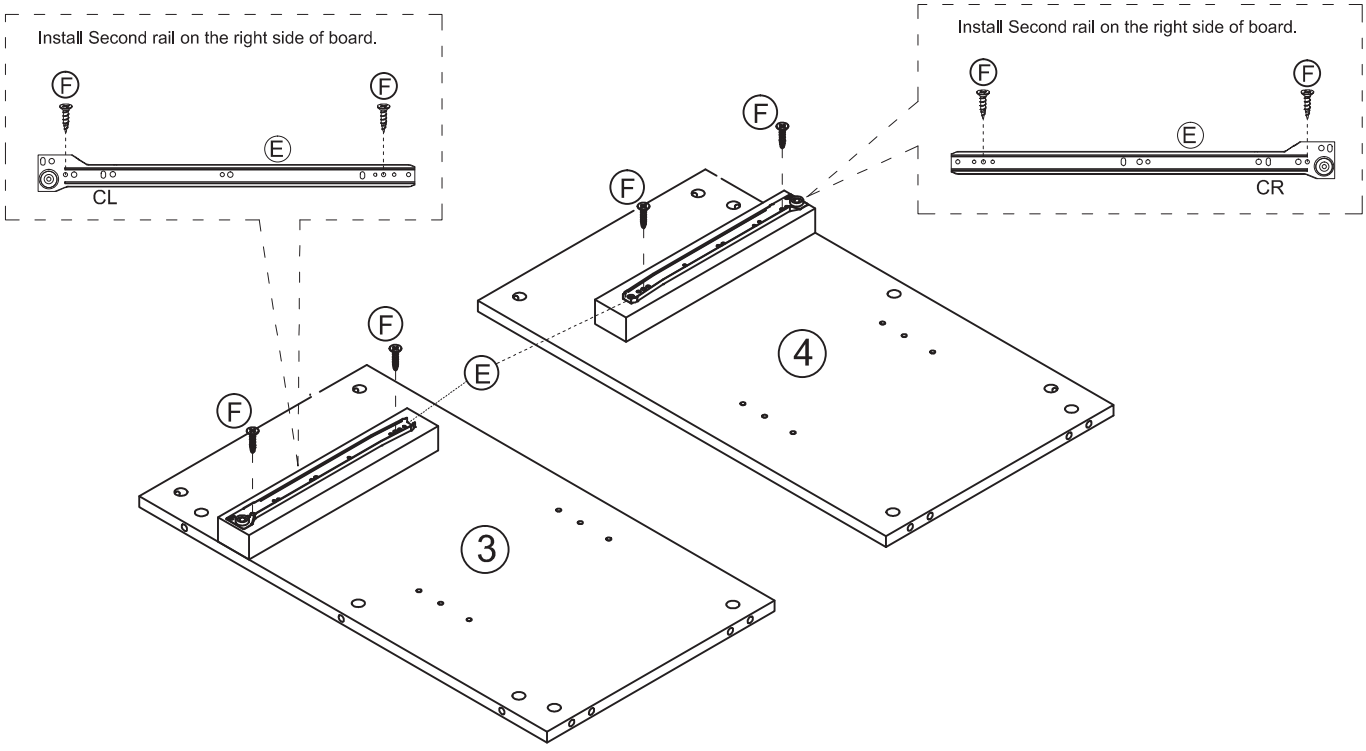
Install Second rail on the right side of board.
F
E
CL
Install Second rail on the right side of board.
CR
3
4

Step 7

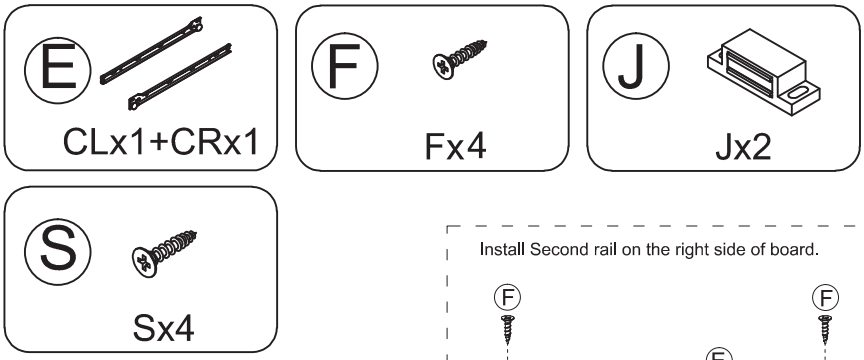
E
CLx1+CRx1
F
Fx4
J
Jx2
S
Sx4

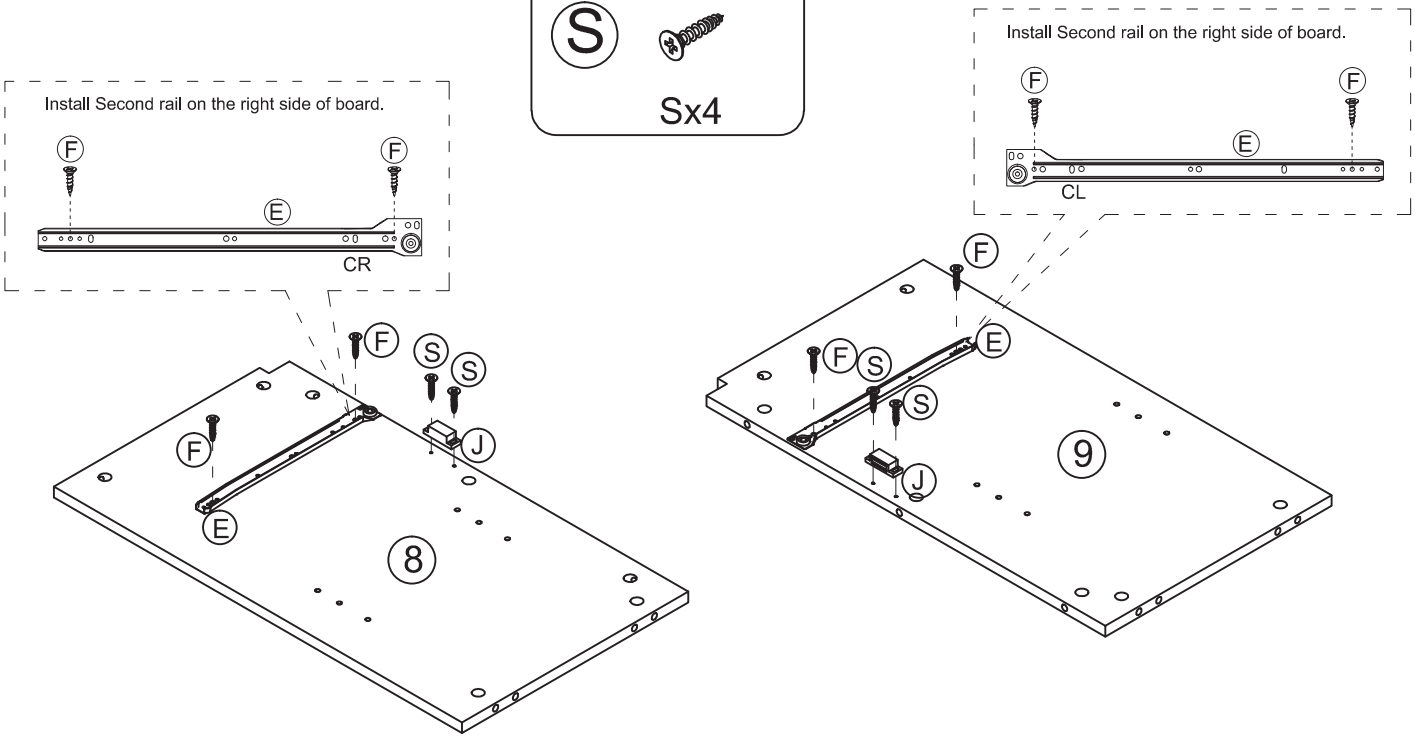
Install Second rail on the right side of board.
F
F
E
CR
F
S
S
J
F
E
8
Install Second rail on the right side of board.
F
F
E
CL
F
F
S
E
S
J
9

Step 8


A
Ax4
B
BX4
C
CX4

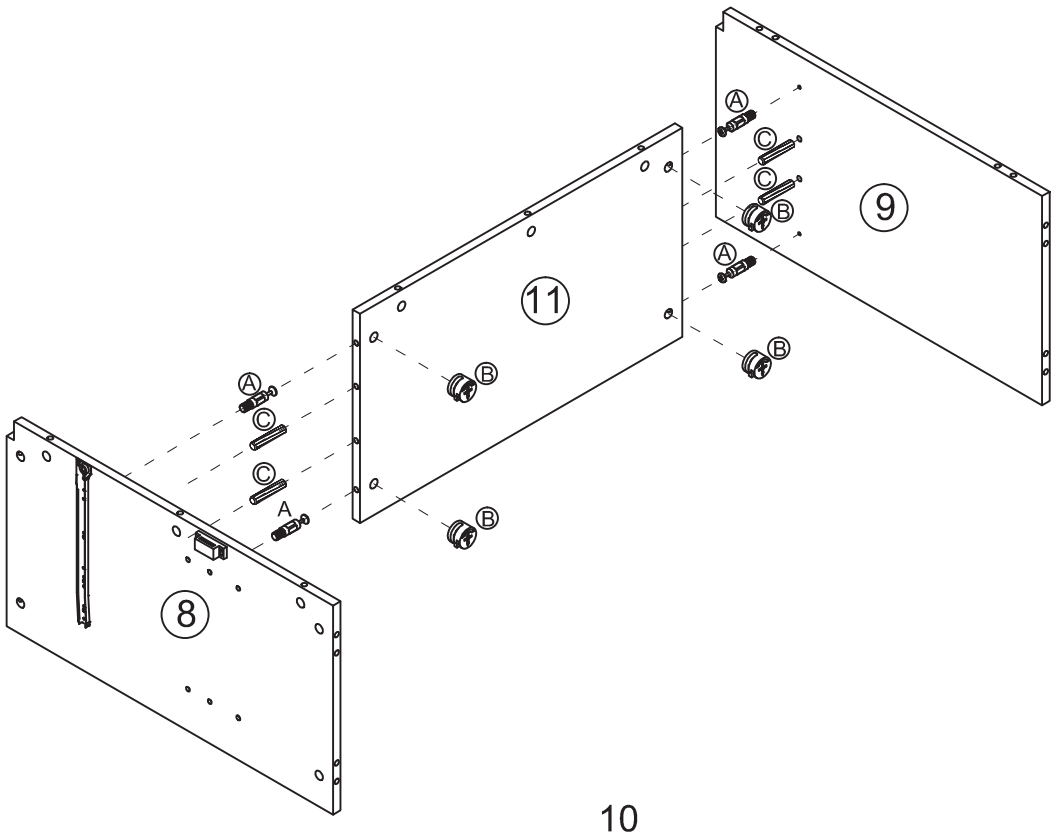
A
C
C
B
9
A
11
B
B
A
C
C
A
B
8

Step 9

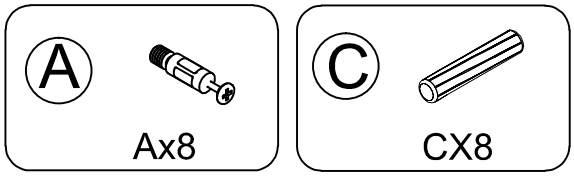

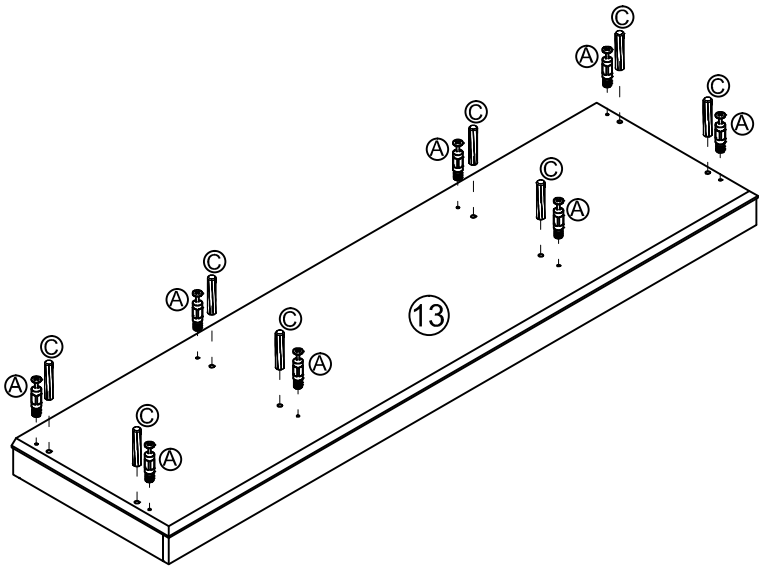

Step 10

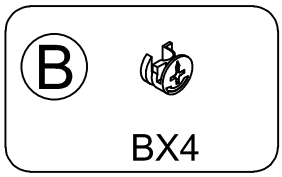

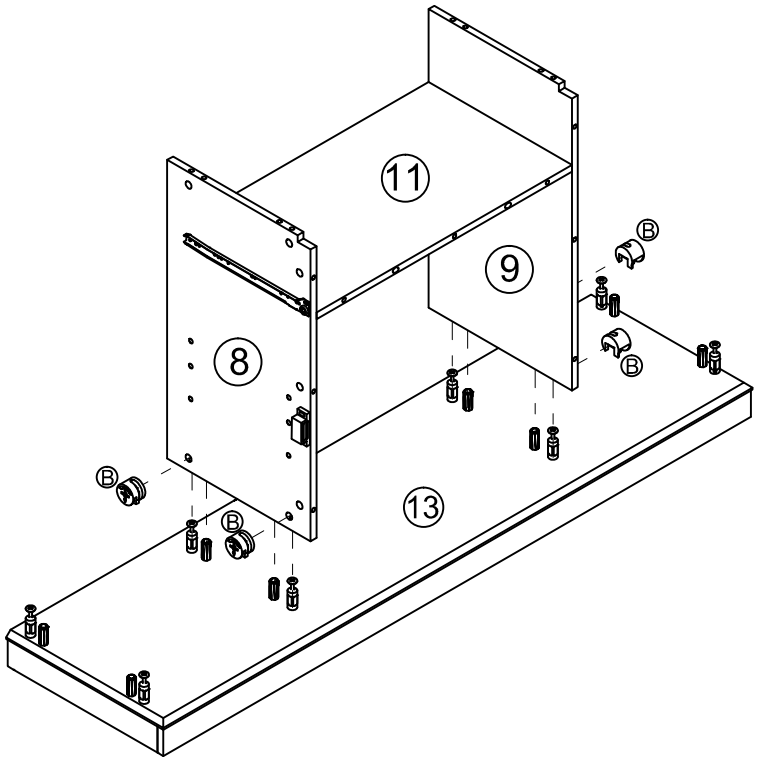

Step 11

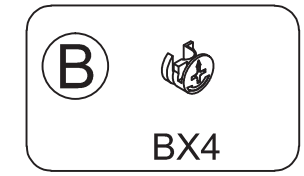

Step 12

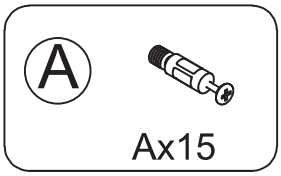

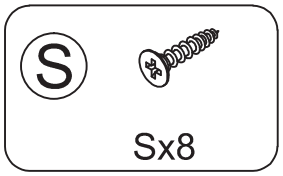

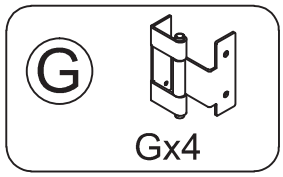

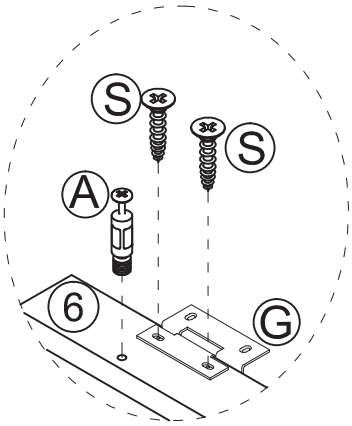

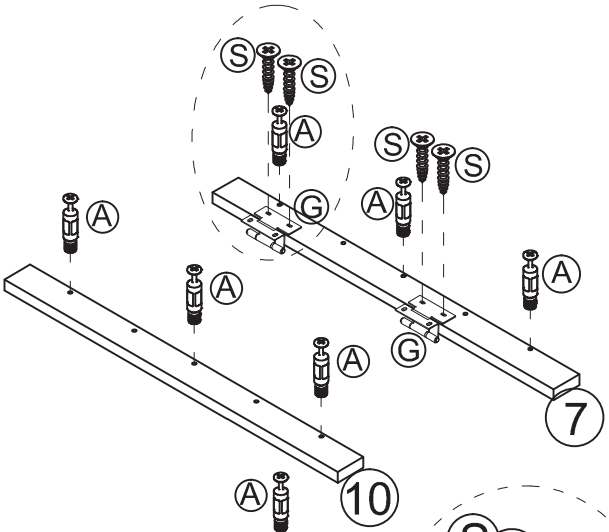

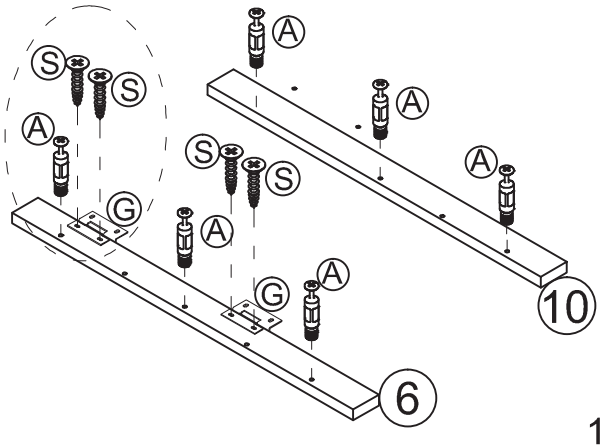

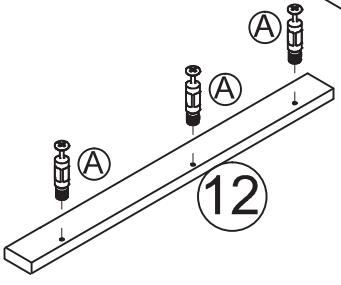

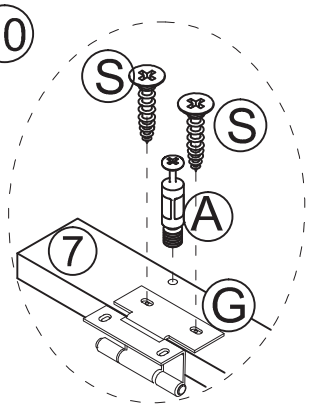

Step 13

B BX15

C CX8

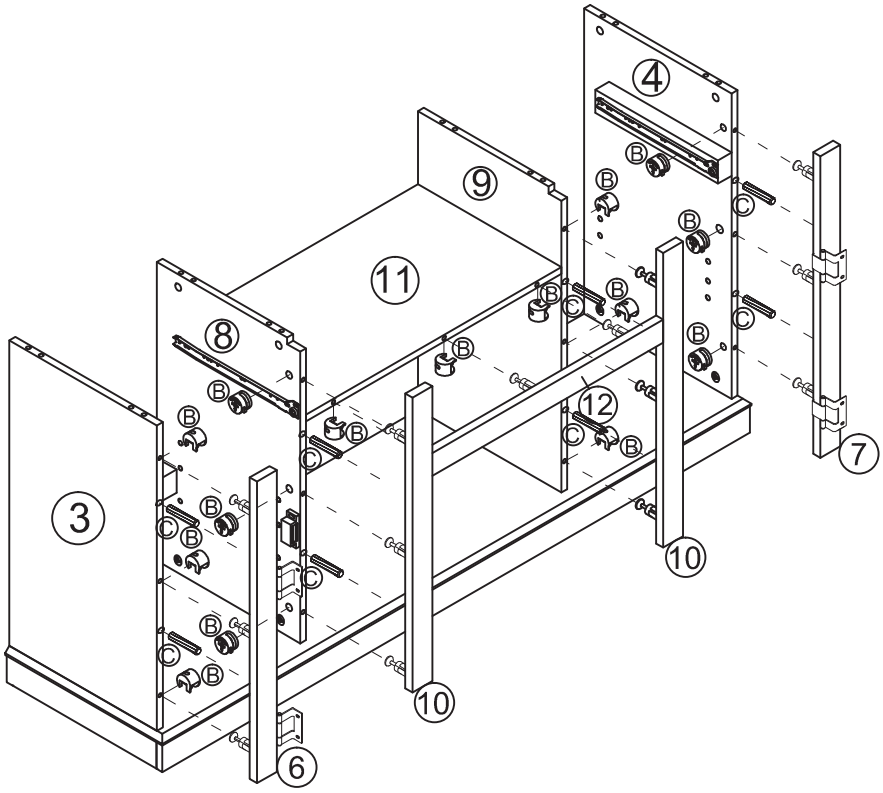

Step 14

H HX4

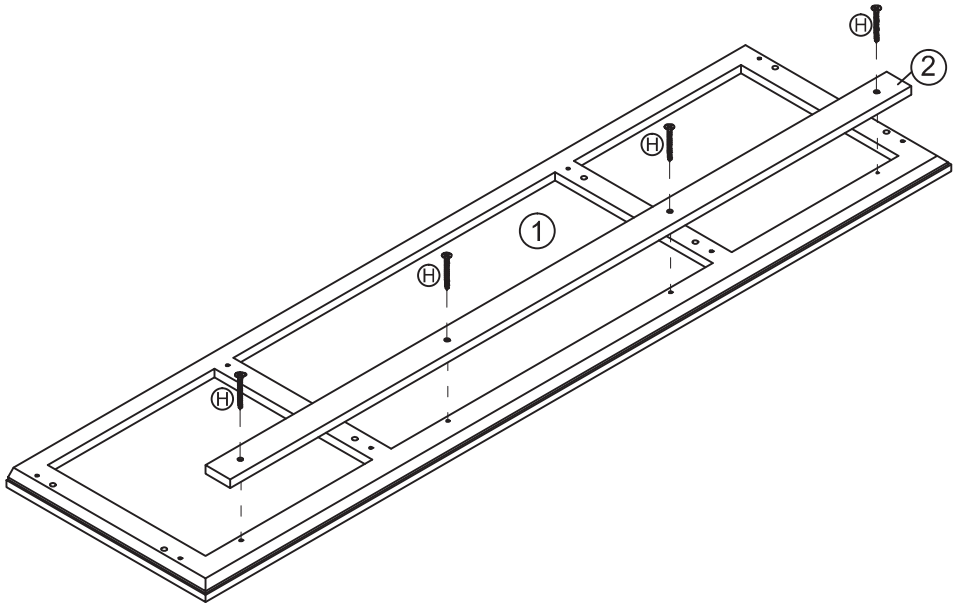

Step 15

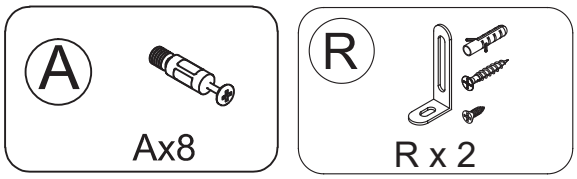

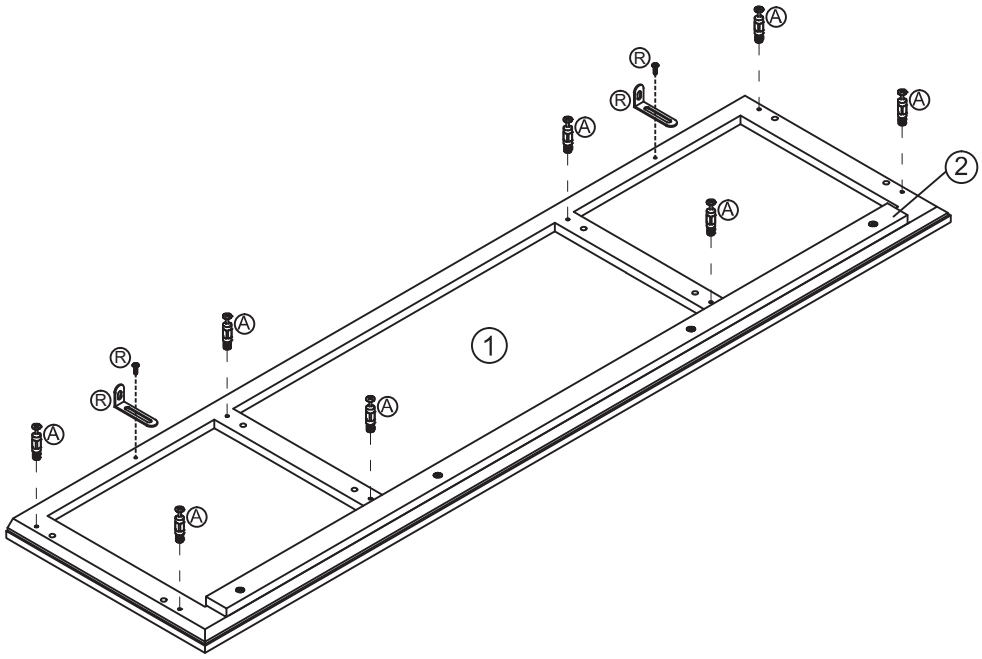

Step 16

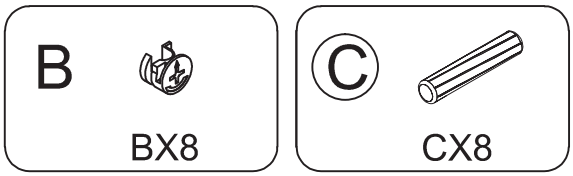

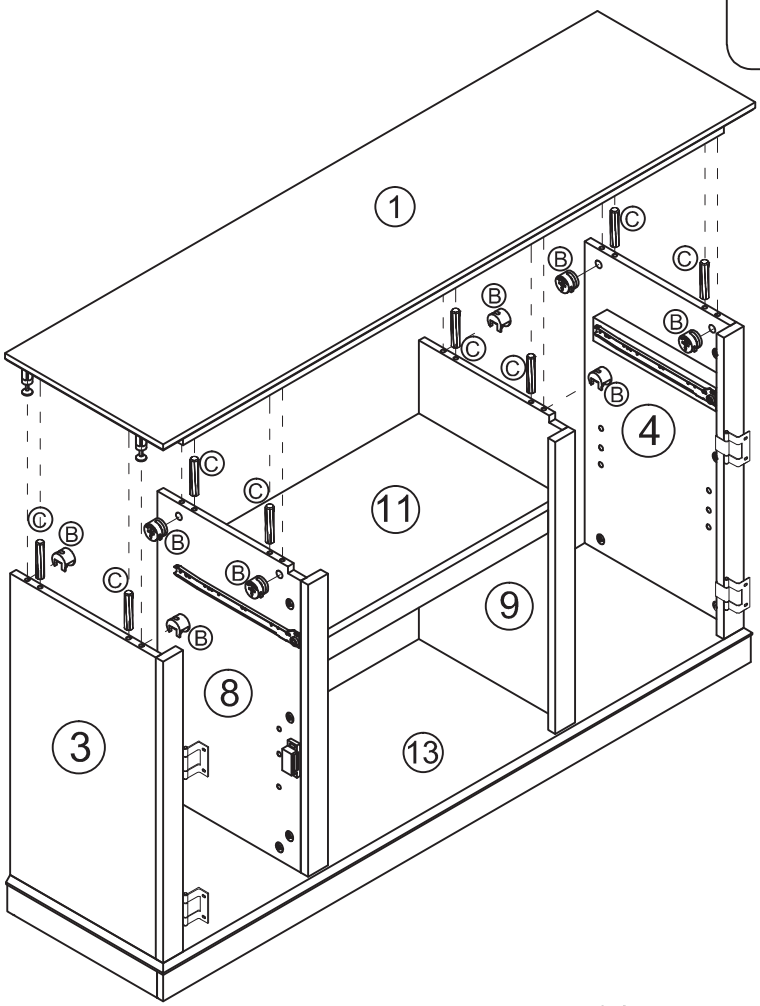

Step 17

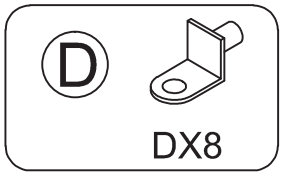

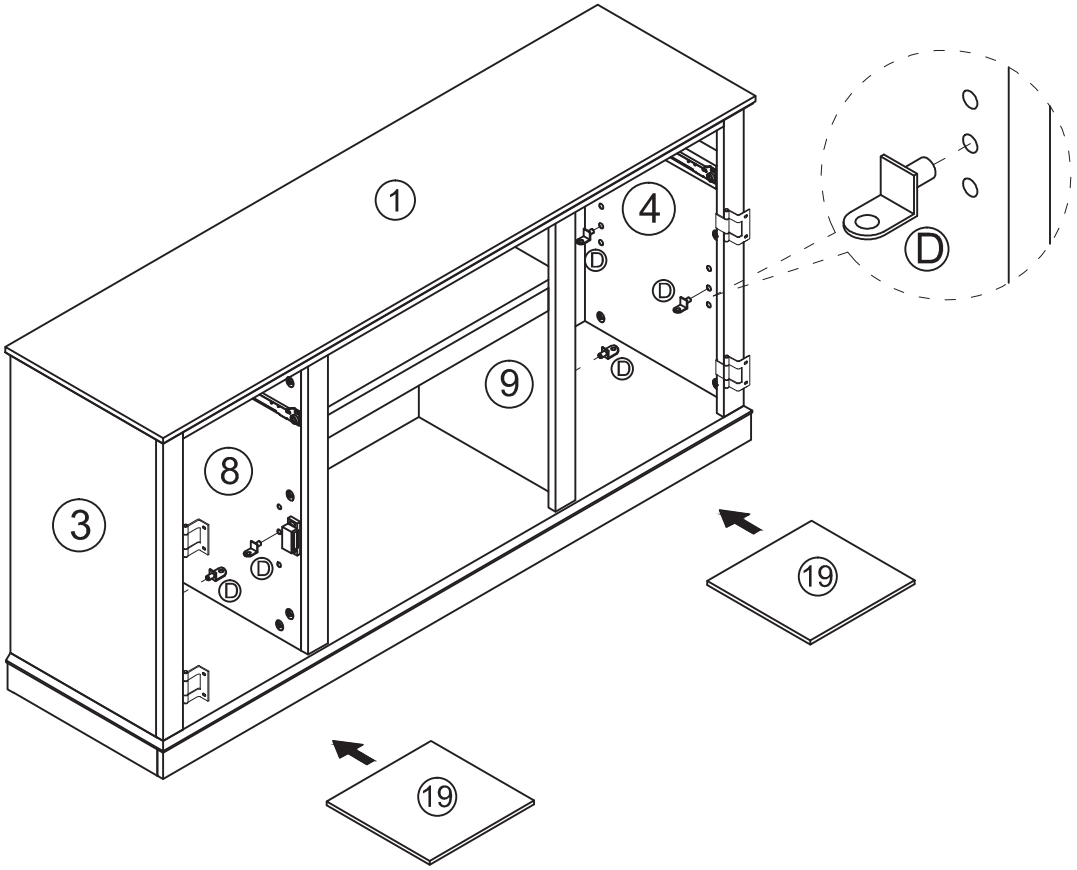

Step 18

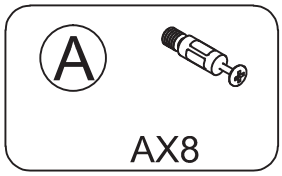

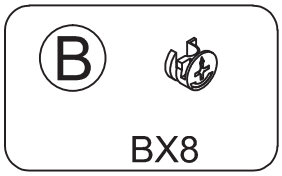

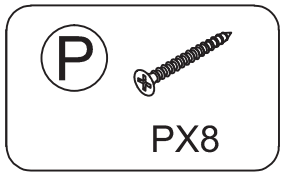

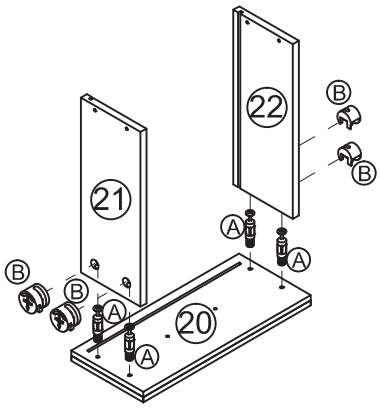

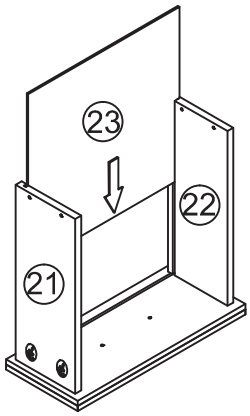

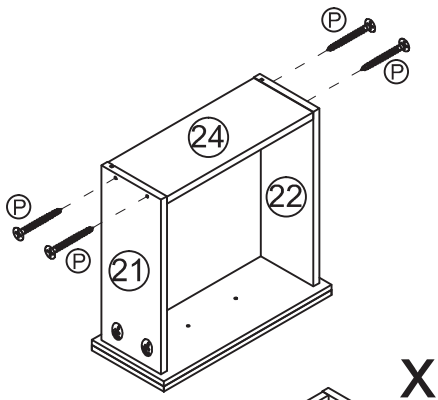

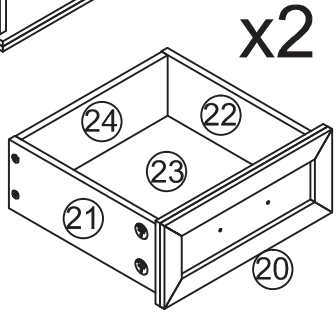

Step 19

E DLx2+DRx2

F Fx8

N NX2

L LX4

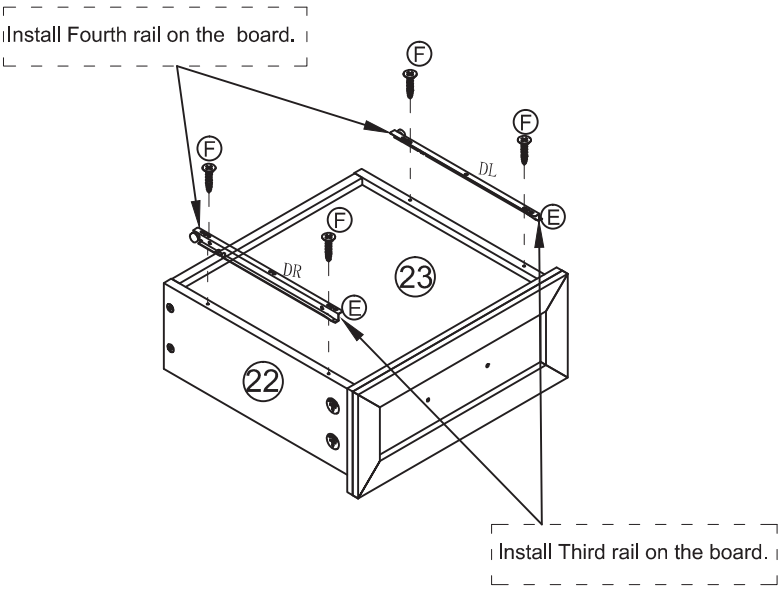

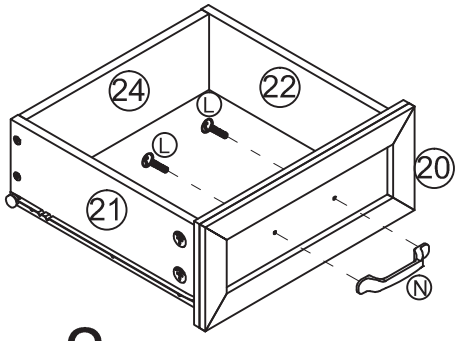

x2

Step 20

K KX2

F Fx 4

N NX2

M MX4

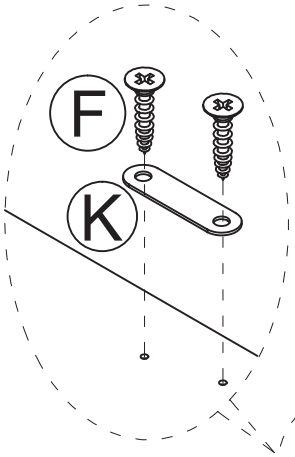

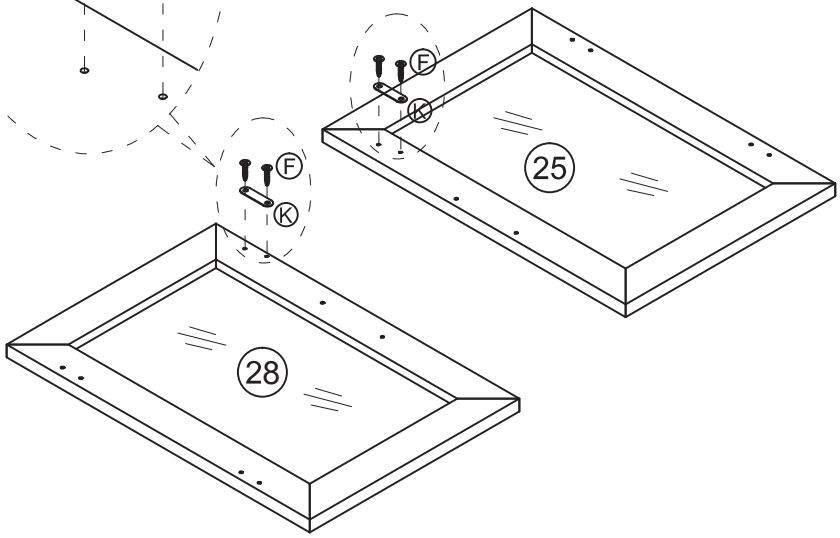

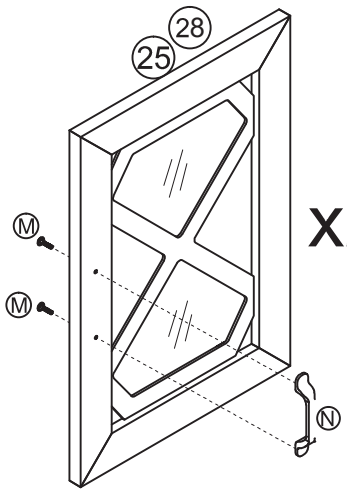

x2

Step 21

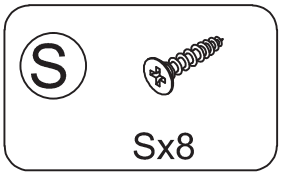

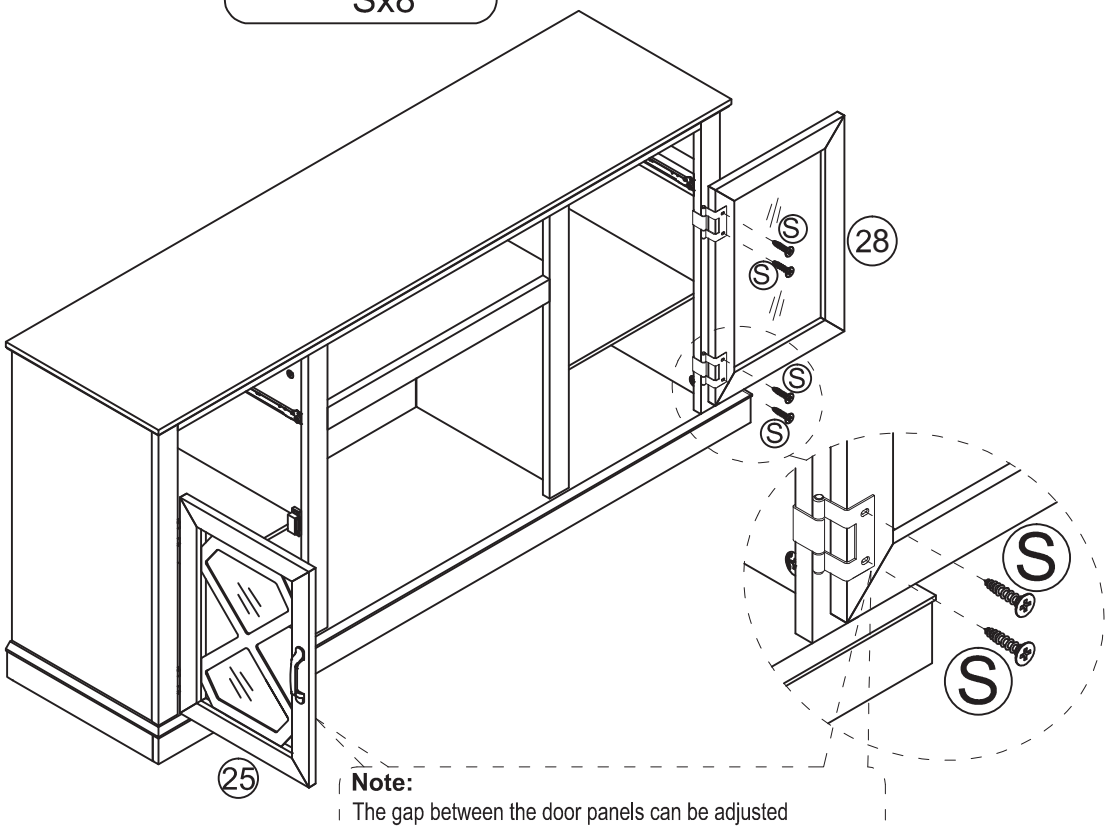

Note:
The gap between the door panels can be adjusted appropriately according to the hinge adjustment hole position

Step 22

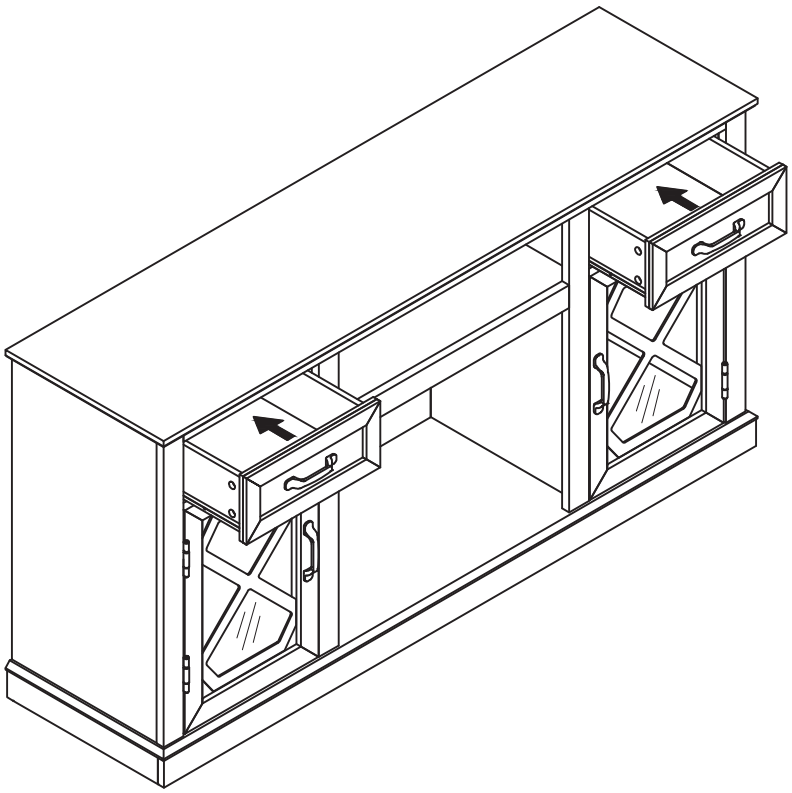

Step 23

Q

Qx26

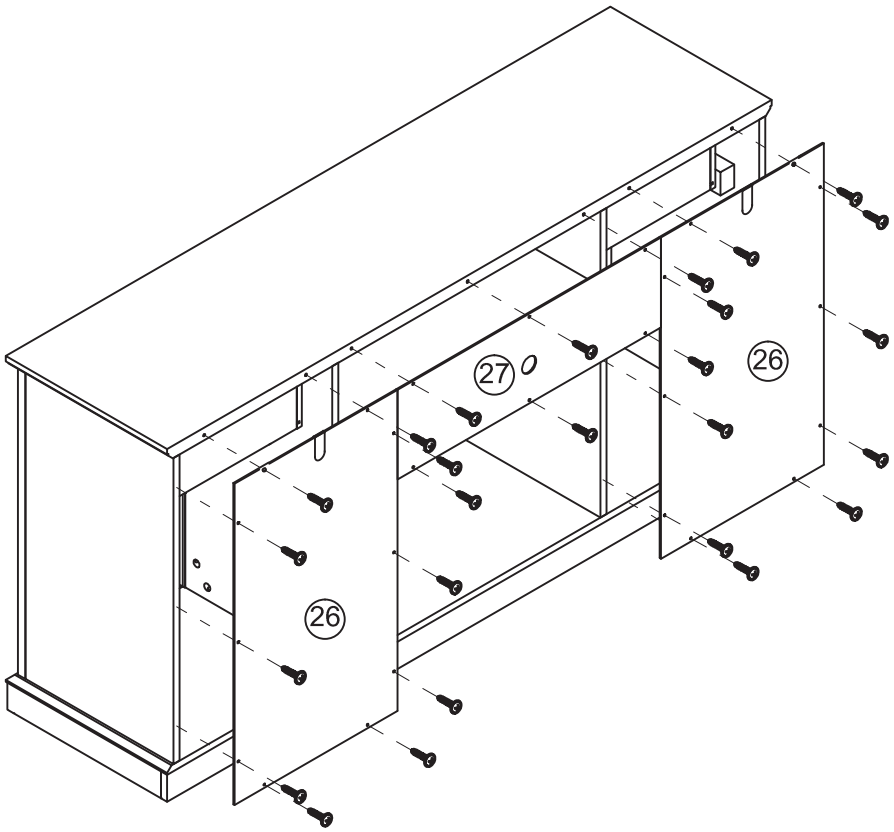

Step 24

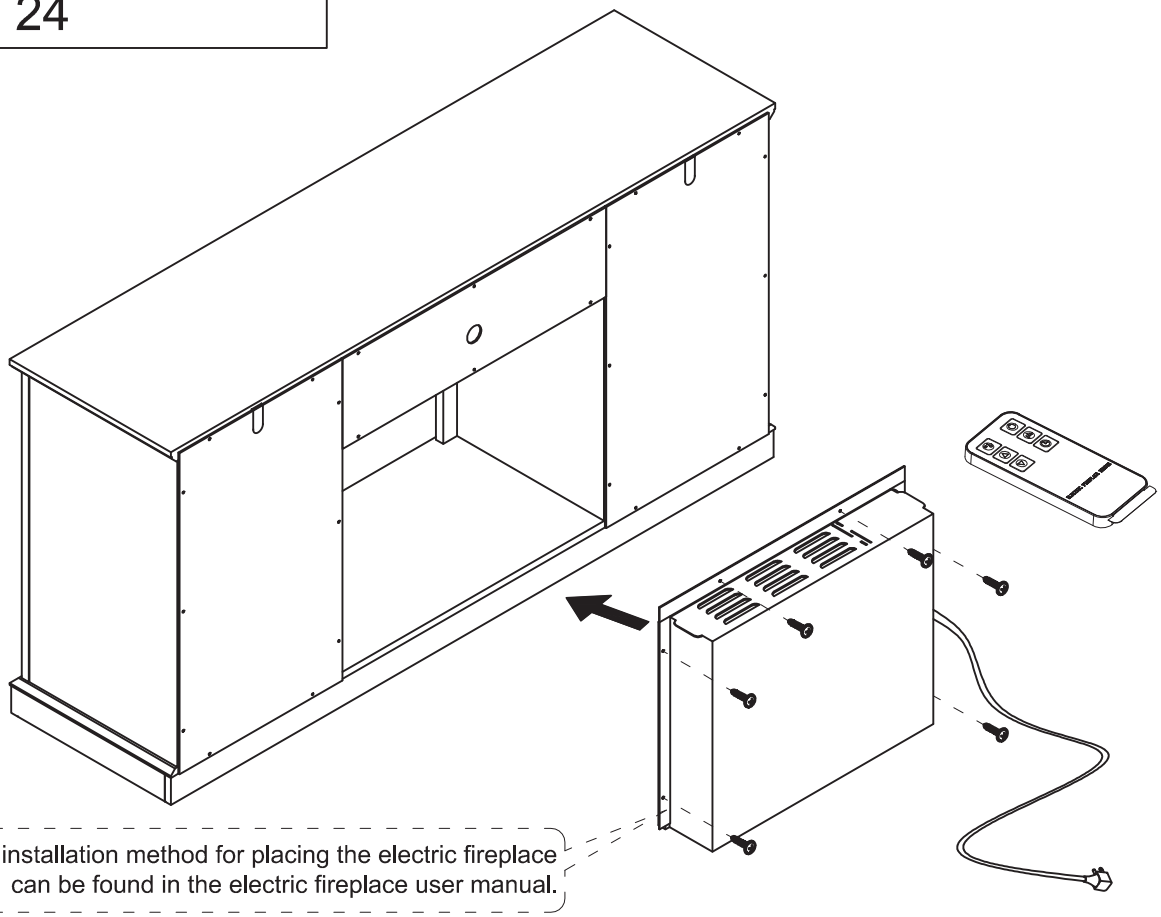

The specific installation method for placing the electric fireplace can be found in the electric fireplace user manual.

Step 25

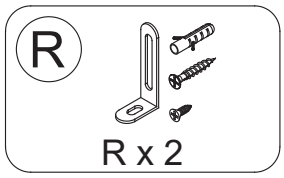

The furniture must permanently be fixed to the wall using the provided anti-tipping device to prevent it from tipping over.

1.Mark the drill positions on the wall with a pencil.
2.Drill a small hole on the marked positions.
3.Insert a wall anchor into the drilled hole.
4.Fix the anti-tipping strap to the wall using the provided screws.

Note: Put the TV behind to the wood trim to prevent falling off.

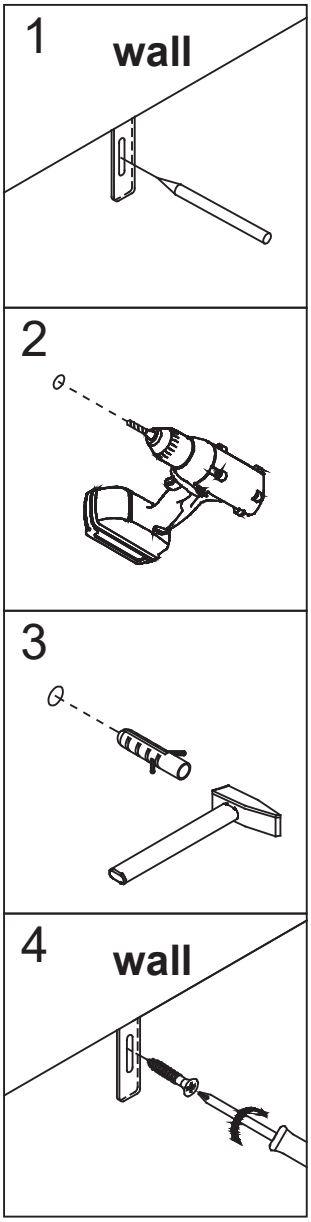

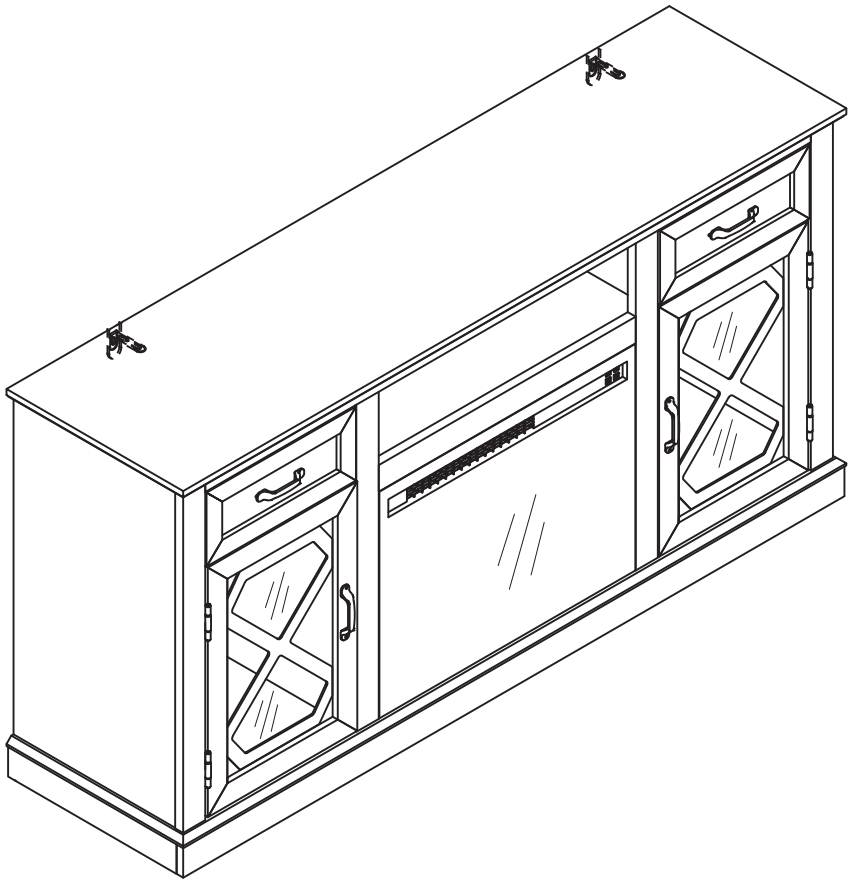

Note:

Please lift up the furniture by two people when moving is needed. Dragging may cause the legs failure.