Operation Instructions

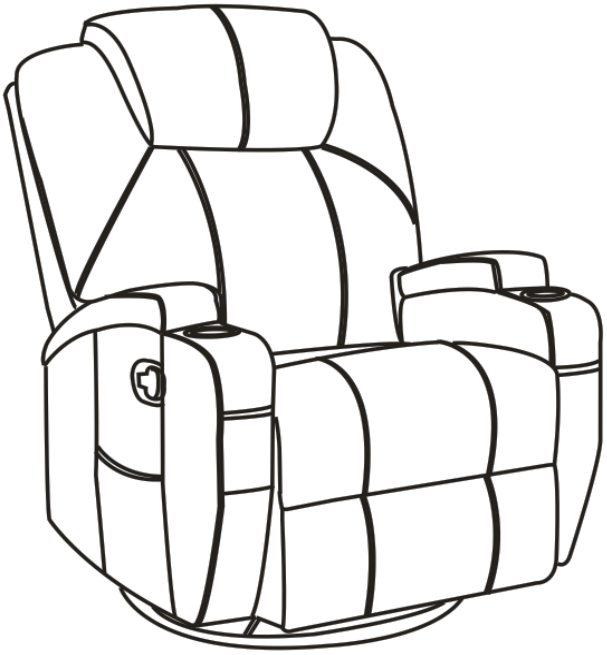

MASSAGE AND ROCKING AND SWIVEL CHAIR

MASSAGE CHAIR

READ ALL INSTRUCTIONS

BEFORE USING THE ITEM

REMOTE CONTROL

Function of remote

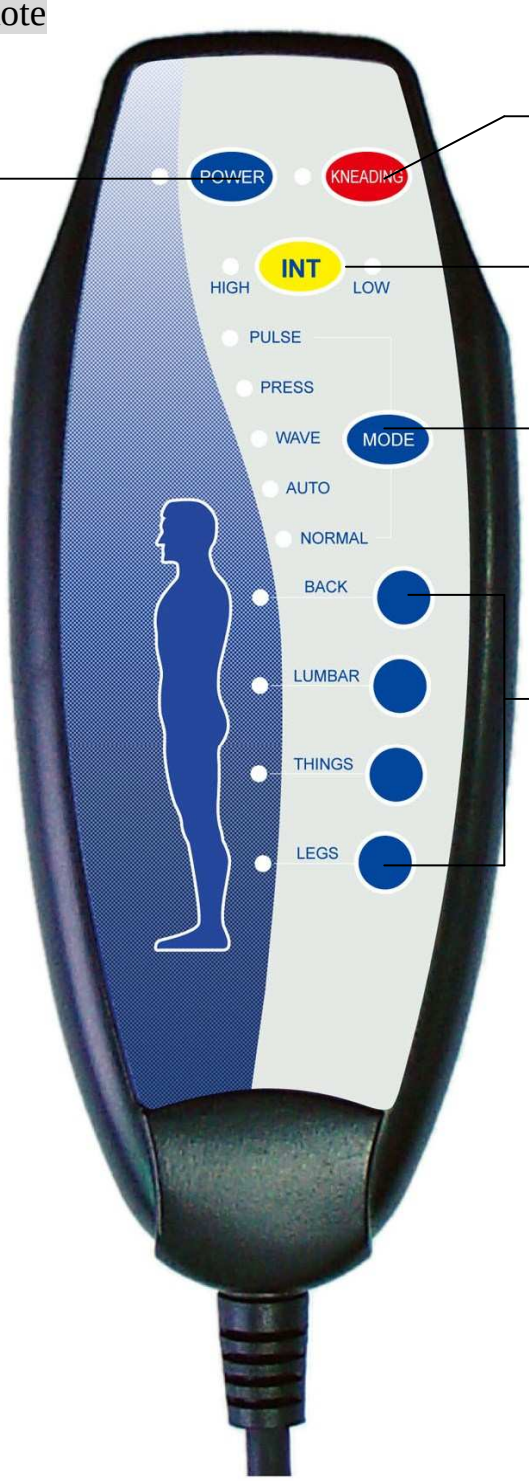

Power on/off

HEAT on/off

Massage intensity

Massage modes selection

Back/Lumbar/Thing

Massage zone selection

PRODUCT FEATURE

- HEAT function
- 8Vibration Motors
- 5 Massaging modes
- Adjustable intensity
- Three massage zones, each zone can be operated individually
- The default timing is 25 min

HOW TO USE

1、 Insert adapter jack into the socket found on back of the massage cushion, then plug the adapter into a wall outlet(see Figure A)

Figure A

2、 Turn the unit **ON** by pressing the **POWER** button once, The LED will illuminate when power is on.

3、 Turn on the massage in each zone by pressing the **BACK**, **LUMBAR**, **THINGS** or **LEGS** buttons. LEDs will illuminate when each zone is activated. To turn off a zone, press the button again.

4、 To choose a desired massage mode, press the **MODE** button. To change modes, press **MODE** button until LED for desired mode illuminates

PULSE---for deep tapping massage

PRESS---provides rapid tapping massage

WAVE----for a gradual, side-to-side vibrating massage

AUTO---provides a random pulsing massage to all zones

NORMAL---for a firm, vibrating massage

5、 To change the massage intensity press the **INTENSITY** button. The LED for **HIGH** or **LOW** intensities will illuminate when chosen.

NOTE：Discontinue use immediately if you feel any discomfort or pain.

6、 NOTE: for your benefit, the massage mat is equipped with an auto shut-off feature that will turn the cushion unit off after 25 minutes of continuous use.

7、 DO NOT use for more than 25 minutes of continuous use.

IMPORTANT SAFETY INSTRUCTIONS

When using an electrical appliance, basic precautions should always be followed, including the following:

1、 This product is for use on a 12V circuit Make sure that the product is connected to an outlet having the same configuration as the plug.

2、 Always unplug the massager from the power source after use, and before cleaning.

3、 Do not reach for massager if it has fallen into water. Unplug immediately.

4、 An appliance should never be left unattended when plugged in. Unplug from outlet when not in use, before putting on or taking off parts or attachments.

5、 Do not use outdoors.

6、 Do not carry this appliance by supplied cord as a handle.

7、 Keep the cord away from heated surfaces.

8、 Close supervision is necessary when this appliance is used by on or near children, invalids or disabled persons.

9、 This unit is not a toy. Children should not use it or play with it.

10、 Do not operate where aerosol (spray) products are being used or where oxygen is being administered.

11、 Do not use near eyes or other highly sensitive areas.

12、 To disconnect, push "POWER" key to "OFF" place, make sure all functions stopped, then remove plug from outlet.

13、 Keep cord away from heated surfaces.

14、 Use this appliance only for its intended use as described in this manual. Do not use attachments not provided with the unit.

HEALTH CAUTION

- If you have any concerns regarding your health, consult your doctor before using this product.
- Individuals with pacemakers should not use this product.
- If you experience pain in a muscle or joint for a prolonged period of time. Discontinue use and consult your doctor. Persistent pain could be a symptom of a more serious condition.

MAINTENANCE INSTRUCTIONS

TO STORE:

Place unit in its box or safe, dry, cool place. Avoid contact with sharp edges or pointed objects which might cut or puncture the fabric. Do not wrap power cord around the unit. Do not hang the unit by power cord.

TO CLEAN:

- Insure the unit is unplugged from the power source, and allow to cool before cleaning.
- Do not place in any liquid to clean. Clean fabric cover by wiping with a damp sponge, using a mild detergent or suds. Pat dry with clean, dry cloth.
- Do not use abrasive cleaners, brushes, gasoline, kerosene, glass /furniture polish, paint thinner or water hotter than 120*to clean the unit.
- To clean the unit, make sure the massager is unplugged. Allow the unit to cool and the wipe down with a damp clean cloth. Do not use any strong chemical cleaners.

Adjusting the angle of the chair back

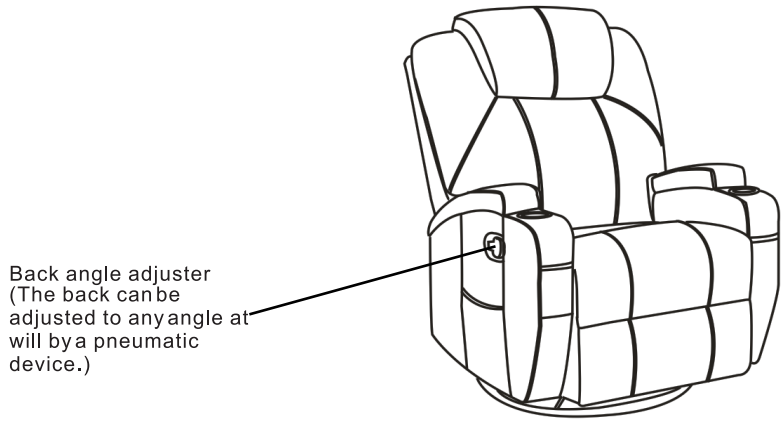

- Pull up the plastic handel, the foot-rest will be reclined. Please sit on the chair and lean your back against the backrest. It will turn downward.
- When you want to close the chair,make sure that you are not puting your weight against the backrest.Push the foot-rest to closed position.

※ The massage functions will not be affected during the adjustion.

Technical Specifications

Rated Voltage: 110V
Rated Frequency: 60Hz

IMPORTANT SAFETY INSTRUCTIONS

When using an electrical appliance, basic precautions should always be followed, including:

1. Always unplug the massage chair from the power source after use, and before cleaning.
2. Do not reach for massage chair if large amounts of liquid have spilled on it. Unplug immediately.
3. The chair should never be left unattended when plugged in. Unplug from the outlet when not in use, before putting on or taking off parts or attachments.
4. Do not use outdoors.
5. Do not carry this appliance by the supplied power cordusing it as a handle.
6. Keep the cord away from heated surfaces.
7. Close supervision is necessary when this appliance is used by or near children, invalids or disabled persons.
8. This unit is not a toy. Children should not use or play with it.
9. Do not operate where aerosol (spray) products are being used or where oxygen is being administered.
10. Do not use near eyes or other highly sensitive areas.
11. To disconnect, press the OFF button, make sure all functions are stopped, then remove the plug from the outlet.
12. Use this appliance only for its intended use as described in this manual. Do not use attachments that haven't been provided with the unit.

This appliance is not intended for use by persons (including children) with reduced physical,sensory or mental capabilities, or lack of experience and knowledge,unless they have been given supervision or instruction concerning use of the appliance by a person responsible for their safety, children should be supervised to ensure that they do not play with the appliance

HEALTH CAUTION

- If you have any concerns regardingto your health, consult your doctor before using this product.
- Individuals with pacemakers should not use this product.
- If you have pain in a muscle or joint after using for a prolonged period of time. Discontinue using and consult your doctor. Persistent pain could be a symptom of a more serious condition.

MAINTENANCE INSTRUCTIONS

TO STORE:

Place unit in its box or safe, dry, cool place. Avoid from sharp edges or pointed objects which might cut or puncture the fabric. Do not wrap power cord around the unit. Do not pull the unit by power cord.

TO CLEAN:

- Insure the unit is unplugged from the power source, and allow the unit to cool down before cleaning.
- Do not use any liquid to clean. Clean fabric cover by wiping with a damp sponge, using a mild detergent or suds. Pat with clean,dry cloth.
- Do not use abrasive cleaners, brushes, gasoline, kerosene, glass furniture polish, paint thinner or water hotter than 120°F to clean the unit.

Assemble Instructions

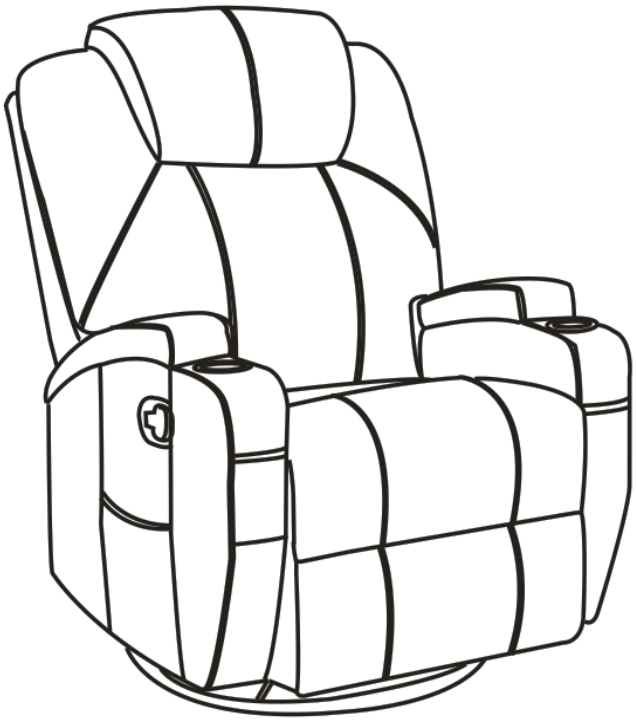

GENERAL INFORMATION, TIPS & TRICKS

1.Please read this instruction prior to assembling this product.
2.To avoid damage, assemble this product on a non-abrasive surface such as carpet.
3.Make sure all bolts are tightly fastened before use.
4.Use in home and in light commercial situations.
5.Please make sure you have all parts before assembly.

PART LIST

A.Main Frame(not replaceable)	**B.Backrest** (not replaceable)	C. Remote
QTY:1pc	**QTY:1pc**	**QTY:1pc**
D.Transformer		

ASSEMBLY INSTRUCTIONS

Step1

Attach backrest (B) to main frame (A) by aligning the metal grooves on backrest to brackets on the main frame as shown.
Ensure the backrest (B) slides down fully over the brackets on the main frame (A).

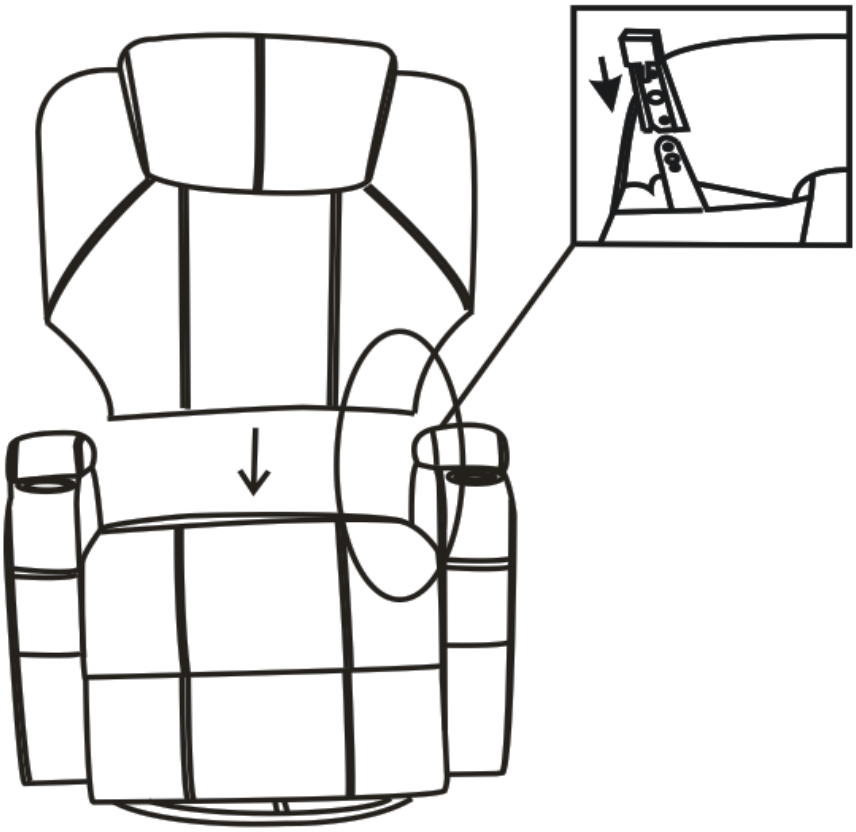

STEP 2

Find the white and red electric wires in the back of main frame (A). Connect by inserting the pin into the socket according to the color.
Attach the remote (C) to the chair by inserting the pin into the big socket in the back of main frame (A).
Attach the transformer (D) to the chair by inserting the pin into the small socket on the back of main frame (A).

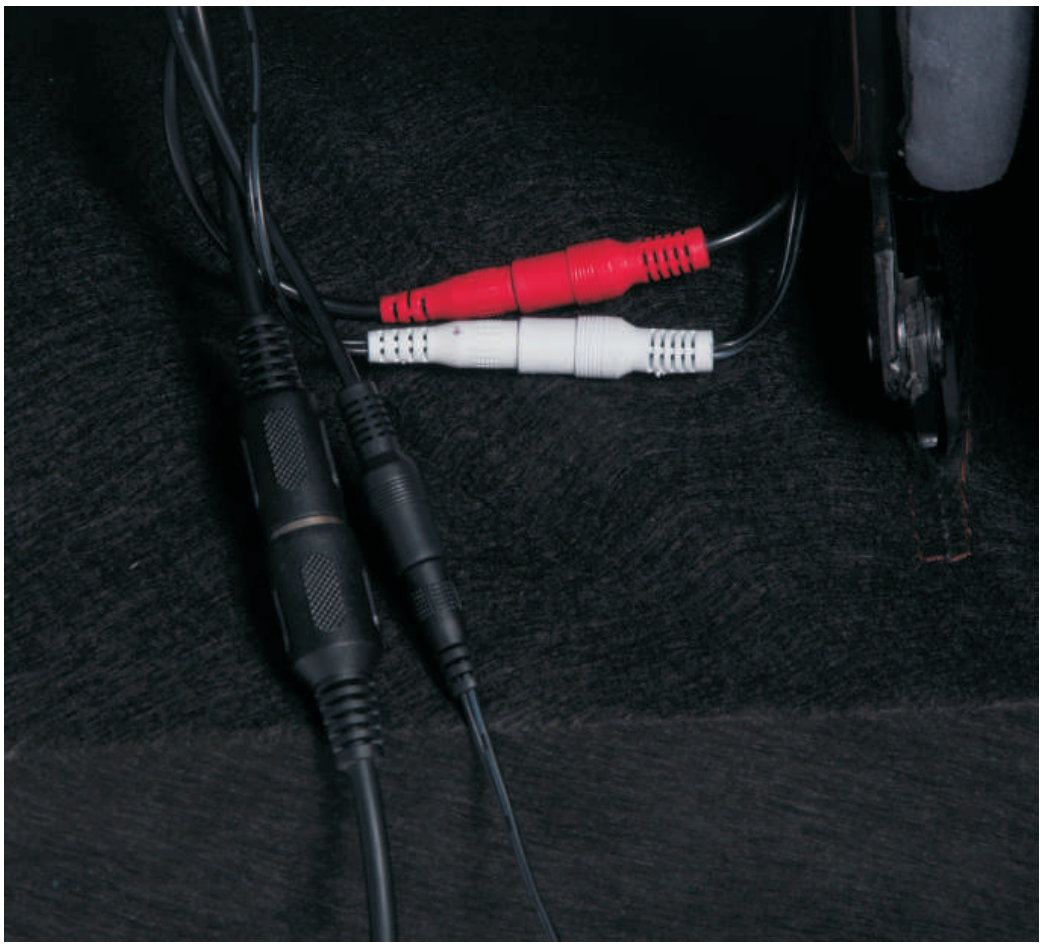

STEP 3

Attach adhesive strip on the backrest(B) to the lower backs of main framer(A)as shown.

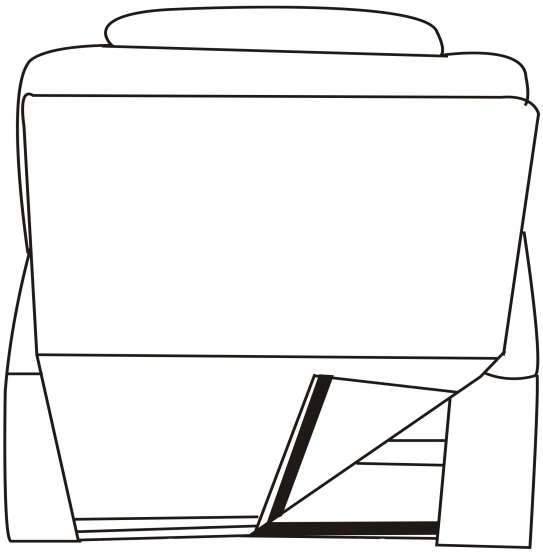

Warning:

- **Sit down in the chair gently. To avoid tipping over, do not throw yourself into the chair. Move the chair into the reclining position slowly, making sure that no children or pets are in close proximity. Do not allow children to play on or around the chair, particularly when it is in an open position.**
- **Close the recliner completely before getting out of it.**
- **Never sit on the footrest when it is open, even a child.**
- **To eliminate the risk of tip over, do not sit on the arms or footrest of the chair.**
- **The chair is designed to be used by 1 adult once.**

- **Never sit on the footrest when it is open, or allow children to do so.**
- **To eliminate the risk of tipover, do not sit on the arms or footrest of the recliner.**
- **Only one adult should sit in a recliner at a time.**
- **Maximum bearing weight is 330LBS, Do not allow the person who over 330LBS to sit on the sofa.**
- **Pls forbid below people to use this sofa:The people with severe symptoms of heart disease, high blood pressure, cerebral thrombosis and other people who are sensitive to heat or completely insensitive , or the people with bad bones or waist state, pregnant women, children, and other people who is not suitable to use this product or use the product under the guidance of doctors.**
- **If you want to recline the sofa well, You need to put the sofa at least 100cm distance from the wall or other obstacle,**
- **Product Can not touch the water, fire, etc., can not touch sharp objects (knives, nails, etc.)**
- **Maintenance manual Instruction:**

  1.To avoid collision,you should carry the sofa carefully.

  2. If you find some dirty on chair, please spray the sofa special cleaner on dirty part, then use the sponge or cloth to wipe the dirty. Do not use water, soap water or cleaner with wax. If you find some dust on sofa surface, please use dry cloth to wipe it gently. Please wipe the sofa carefully and gently.

  3.Please do not put the sofa in direct sunlight place and do not put the sofa in the place which air conditioner blows directly. Or it is easy to make the PU hard and faded.

How to disassemble

STEP 1

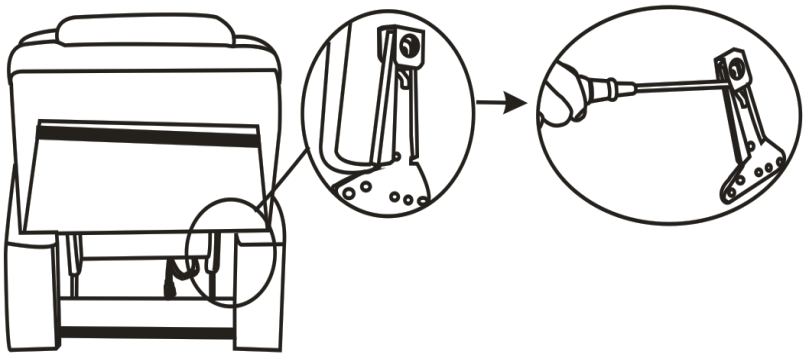

Please find a strong tool to prod the small piece of meal grooves, then the backrest will be pulled out. The tool is not included.