LuxenHome

Round Coffee Table

SKU WHIF2395

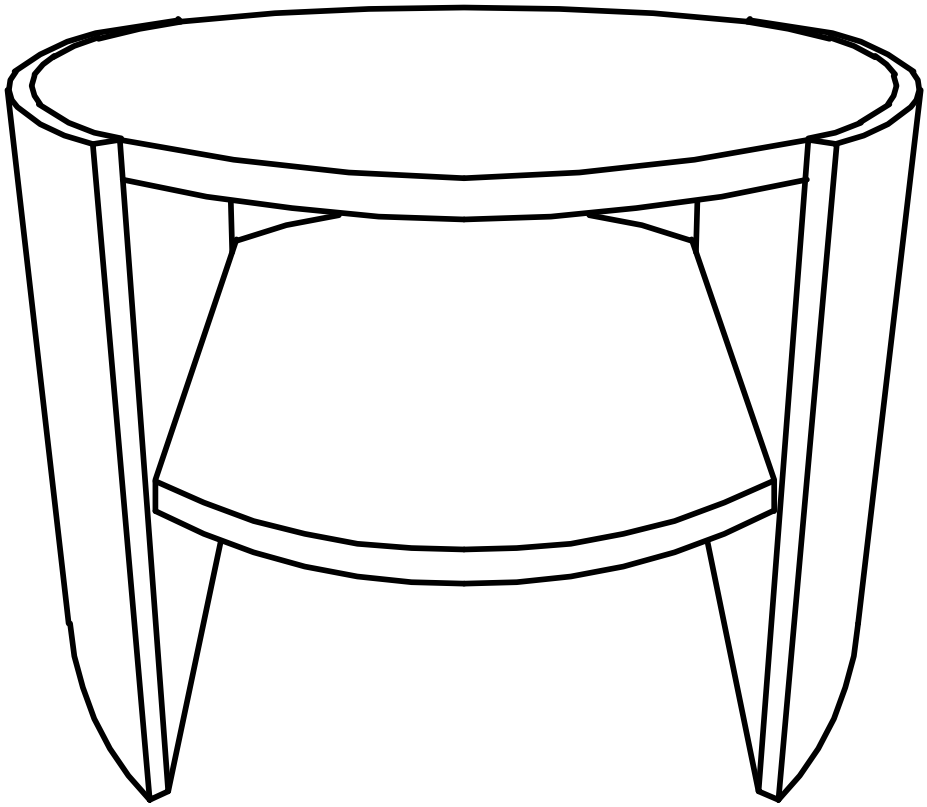

50 min. assembly

1 person

*The estimated assembly time may vary depending on the individual.

ASSEMBLY INSTRUCTIONS

Hey, there

Now is assembly time!

Deeeeeep breathe.... and again....
Tools ready,
Easy peasy!

Estimated



50 min. assembly
1 person

Tools Required

- Allen Wrench (included)

***important**: Cautious when you use power tools*

Need Help?

Call us at +1 909 548 6688
Email customerservice@luxenhome.com
Submit a ticket on www.luxenhome.com/help

Thank you for purchasing this LuxenHome product. This product has been manufactured with the highest standards of safety and quality.

PLEASE READ ALL INSTRUCTIONS CAREFULLY BEFORE ASSEMBLY.

Unpack all parts from the packaging inside the carton to ensure there are no missing or damaged parts. Lay out all the parts on a clean, flat, and soft surface to prevent scratches. Refer to the steps provided as assembling guide.

Do not attempt to assemble or use the product if any parts are missing or damaged.

REMINDERS

SAFE USAGE IS KEY

Your well-being is our top priority when you use our product. Please prioritize your safety by diligently following the assembly guidelines and inspecting the product carefully both when it arrives and before each use.

Please be aware that LuxenHome and Winsome House, Inc. cannot be held liable for any injuries or fatalities that occur due to not adhering to the provided instructions or misuse of the product.

DO NOT MODIFY

Our products undergo rigorous testing to ensure they meet established safety standards before being released for sale. Altering the product in any way can lead to serious safety concerns, for which LuxenHome cannot assume responsibility.

Please save this manual for future reference.

What’s in the box

Parts

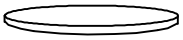

1 X 1
Tabletop

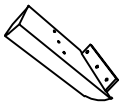

2 X 2
Leg of a table



3 X 1
Middle board

Hardware & Accessory



A X 12+1
M6 x 10mm



B X 18+1
∅1 3x ∅6 x 1mm

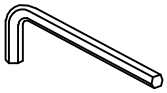

C X 1
M4

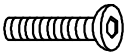

D X 6
M6 x 20mm



E X 2
Angle iron



F X 4
Felt Foot Pad

Please save this manual for future reference.

Assembly

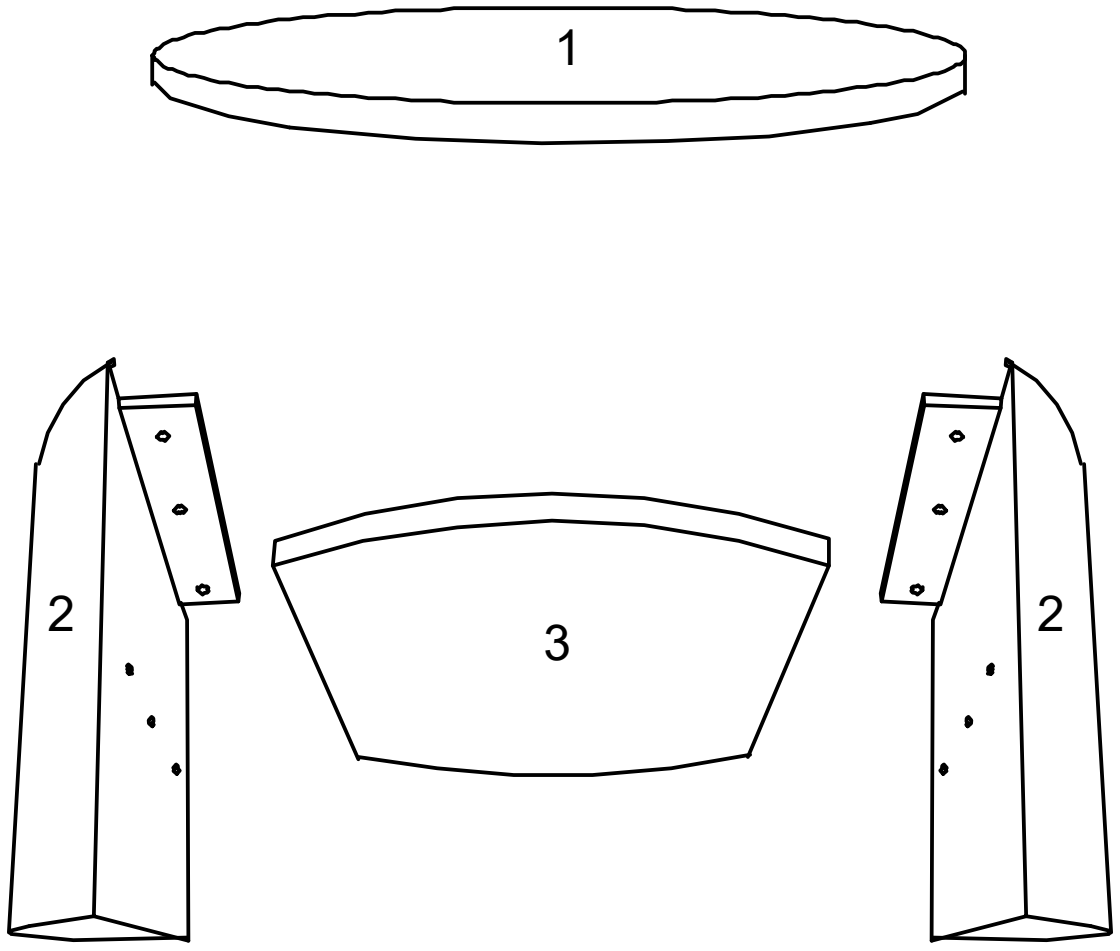

Please save this manual for future reference.

Step 1

Use a wrench (part C) to connect (part E) to (part 2) with the Bolts (part A) and the Flat washer (part B).

Ⓐ X6	Ⓔ X2	Ⓒ X1	Ⓑ X6
			
M6 x 10mm	Angle iron	M4	∅13x∅6 x 1mm

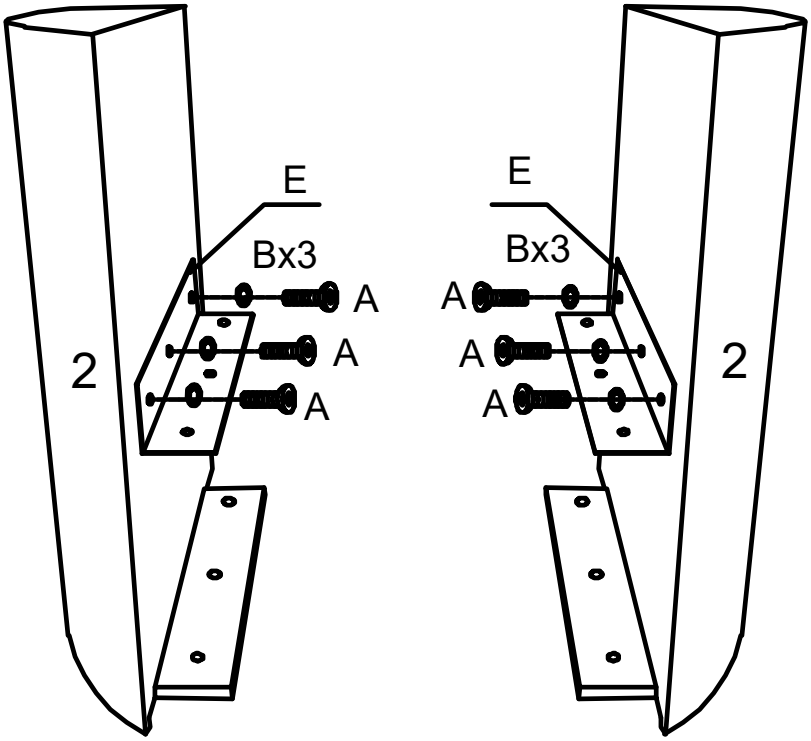

Please save this manual for future reference.

Step 2

Use a wrench (part C) to connect (part 1) to (part 2) with the Bolts (part D) and the Flat washer (part B).

Ⓓ X6	Ⓑ X6	Ⓒ X1
		
M6 x 20mm	∅13x∅6 x 1mm	M4

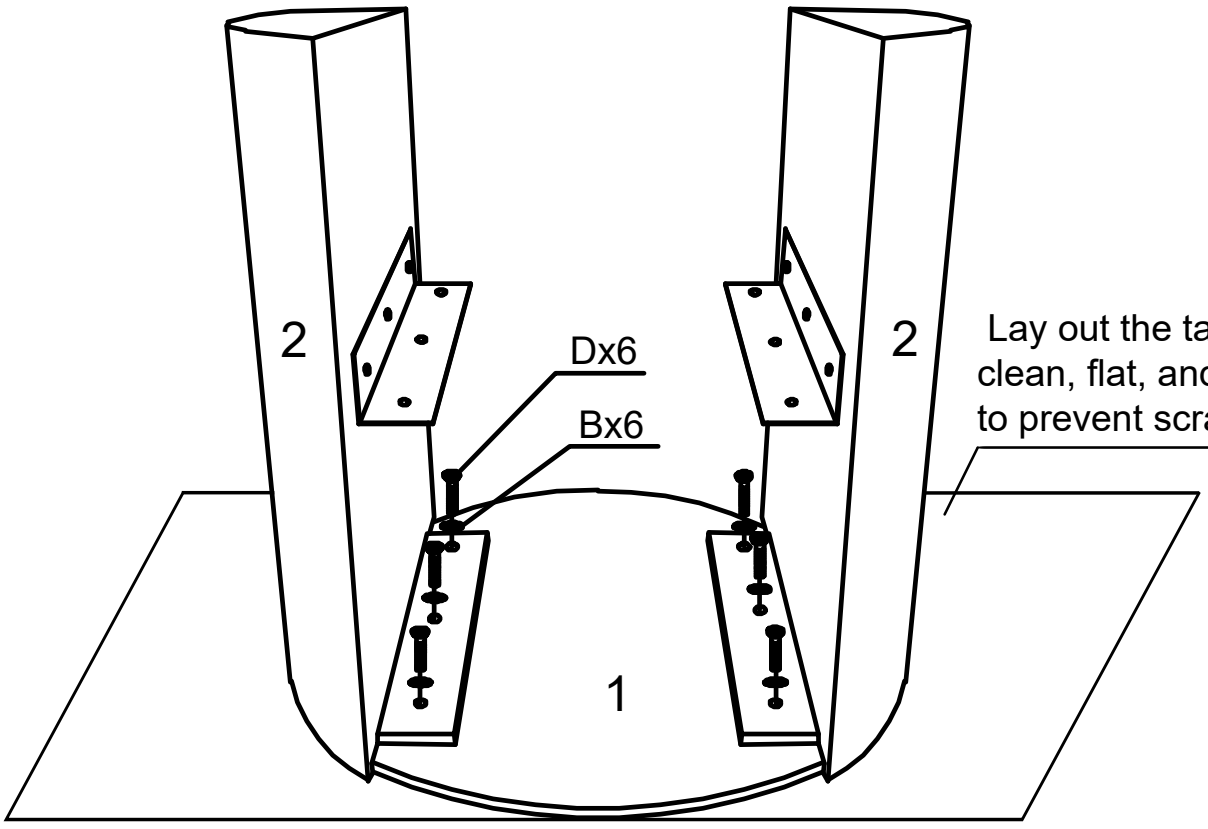

Lay out the table top on a clean, flat, and soft surface to prevent scratches.

Please save this manual for future reference.

Step 3

Ⓐ X6	Ⓕ X4	Ⓑ X6
		
M6 x 10mm	Felt Foot Pad	∅13x∅6 x 1mm

Use a wrench (part C) to connect (part 3) to (part 2) with the Bolts (part A) .and the Flat washer (part B).
Stick foot pads (part F).

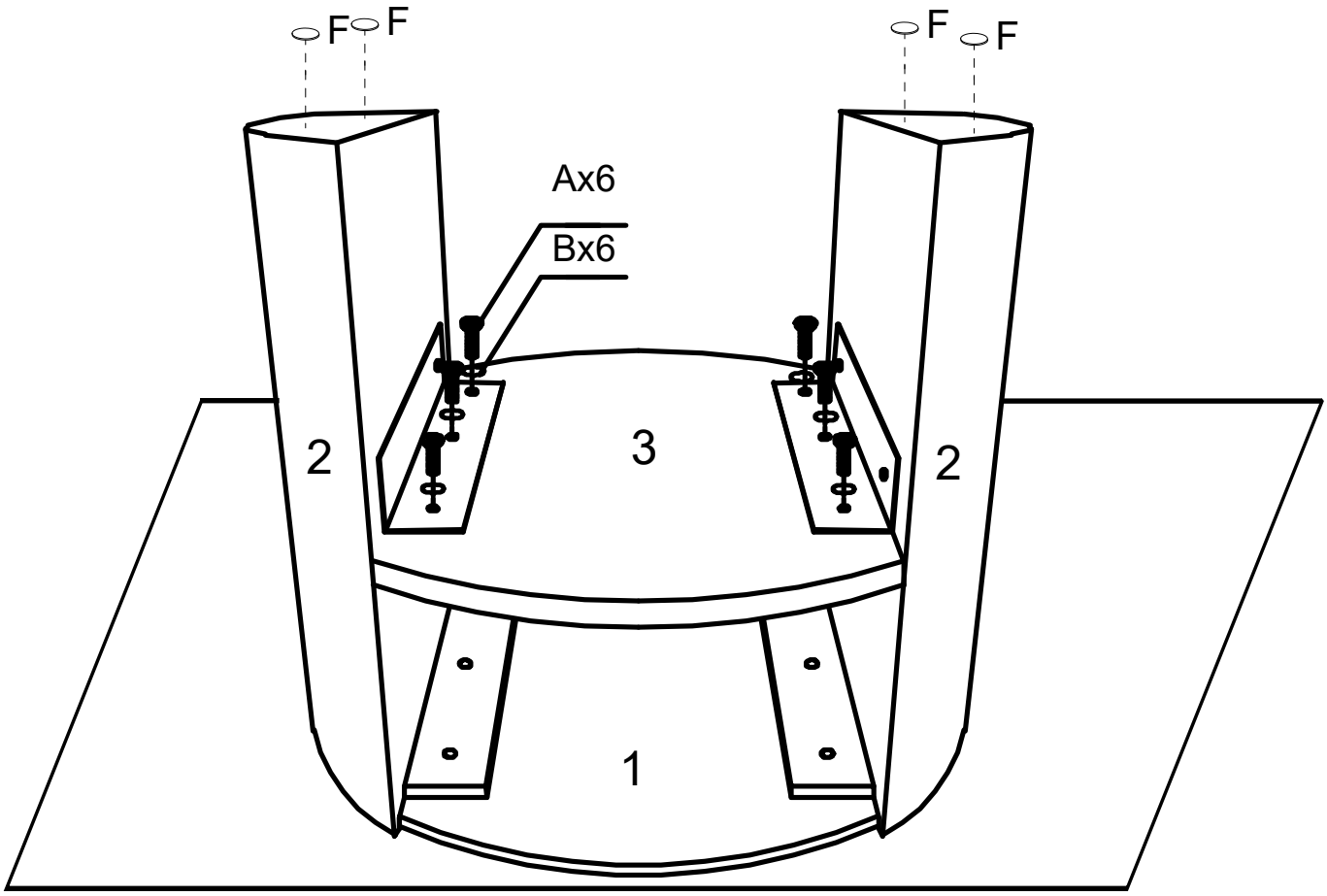

Please save this manual for future reference.

VOILA!

Now enjoy.

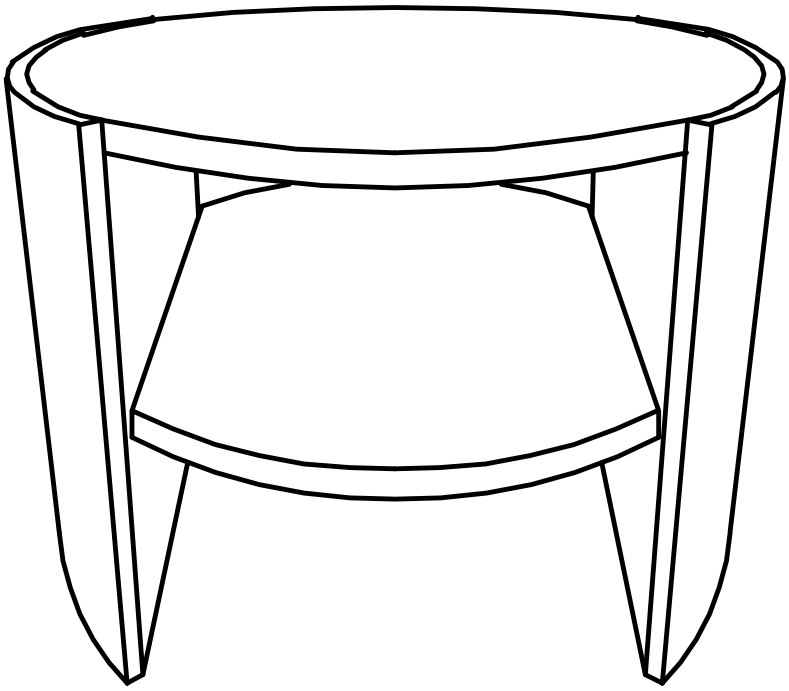

Warning

DO NOT stand or sit on the table as this may damage the product and cause serious bodily injury.

Please save this manual for future reference.

Something not right?

We are always here to help.

We make mistakes like every human does.
Though we always strive to provide the best possible products at competitive prices and the best service in the industry, it's not possible to completely eliminate mistakes. If you experience any dissatisfaction, feel free to contact us immediately. Our in-house customer care team will respond ASAP.

customerservice@luxenhome.com
Get response within 24 hrs

909.548.6688
Mon-Fri 9am-5pm PST/PDT

www.luxenhome.com/help
Submit a ticket on our website

Things to do to expedite the process

- Have your order# ready
- Take photos/videos to help us better identify the issues
- DO NOT throw away the packaging

Please save this manual for future reference.

Happy with our product?

Leave us a review

It really help us as a small business

- Find the product you purchased on our website (tip: search by SKU) and leave us a review.
- Alternatively, you can always return to the marketplace where you purchased it and leave a review there.

Share with others

Our customers look for REAL stuff

- Follow us on IG @luxen.home
- Share your #liveluxen moments



Please save this manual for future reference.