Installation & Assembly

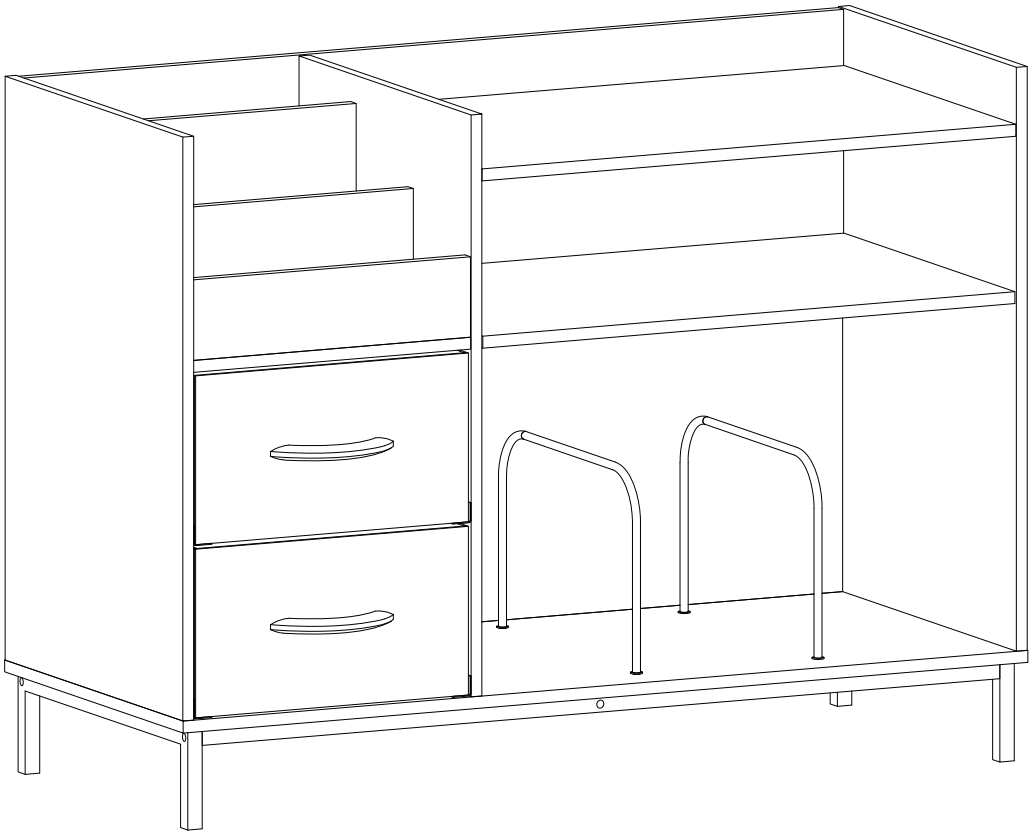

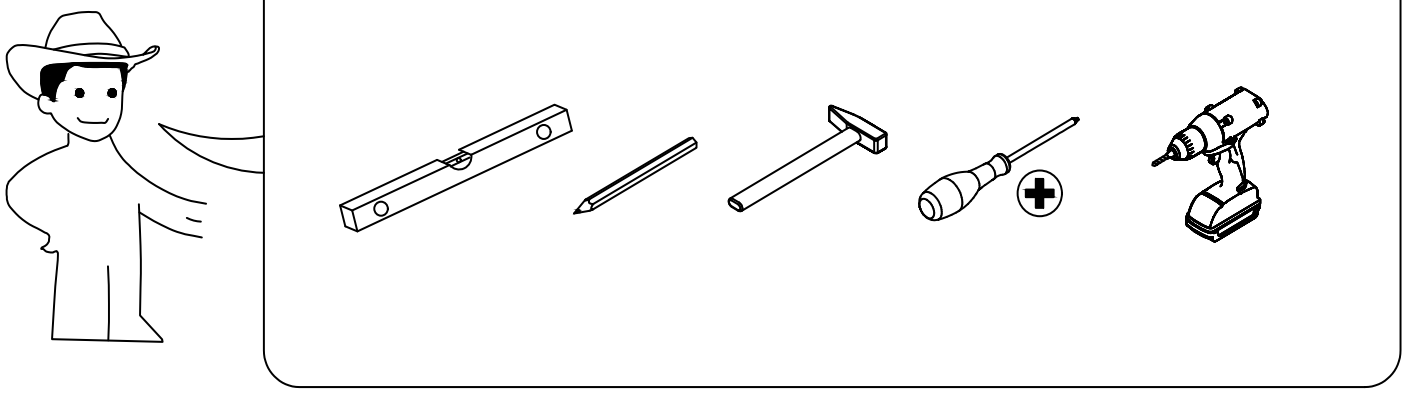

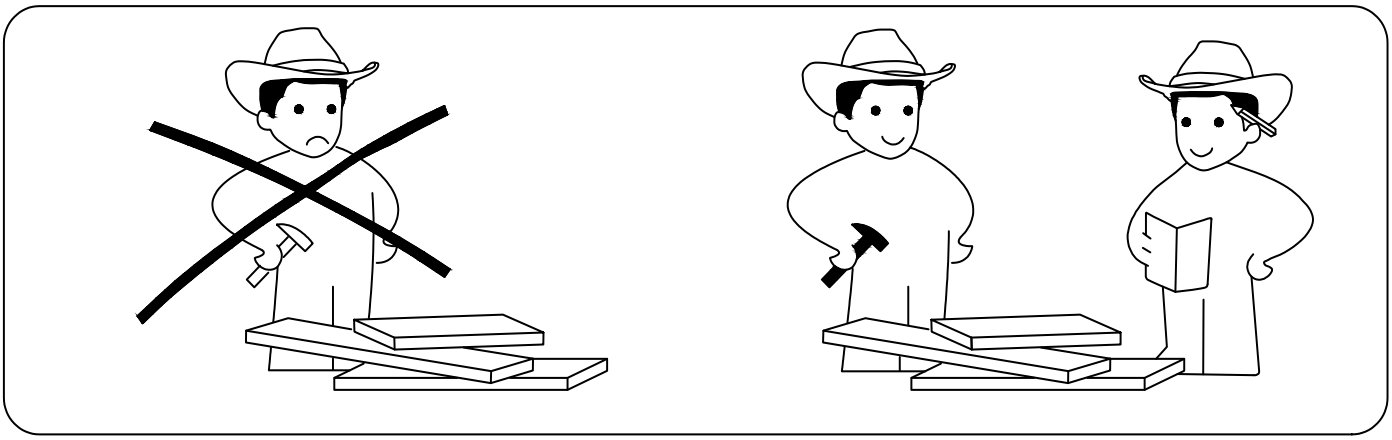

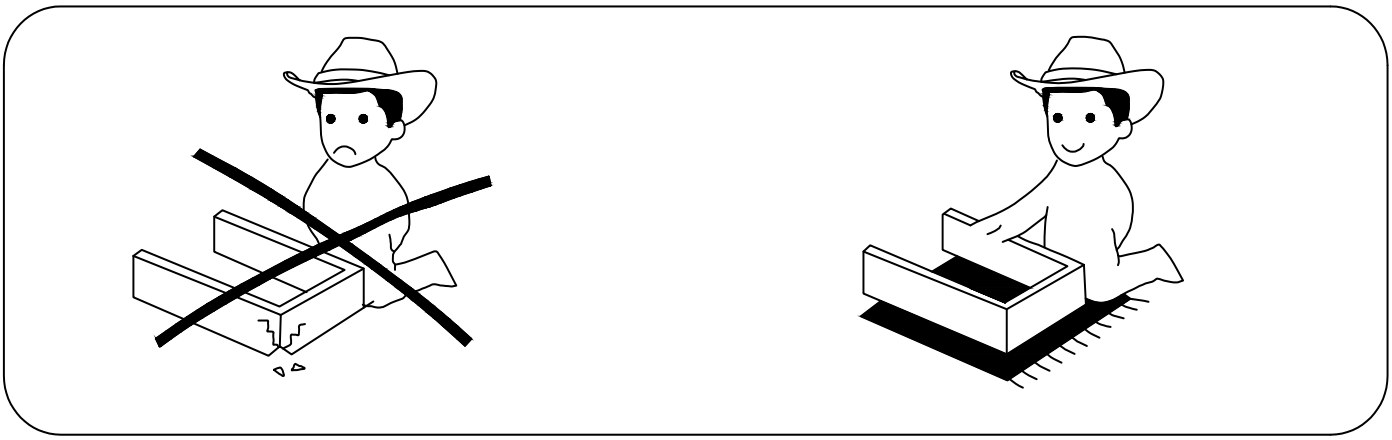

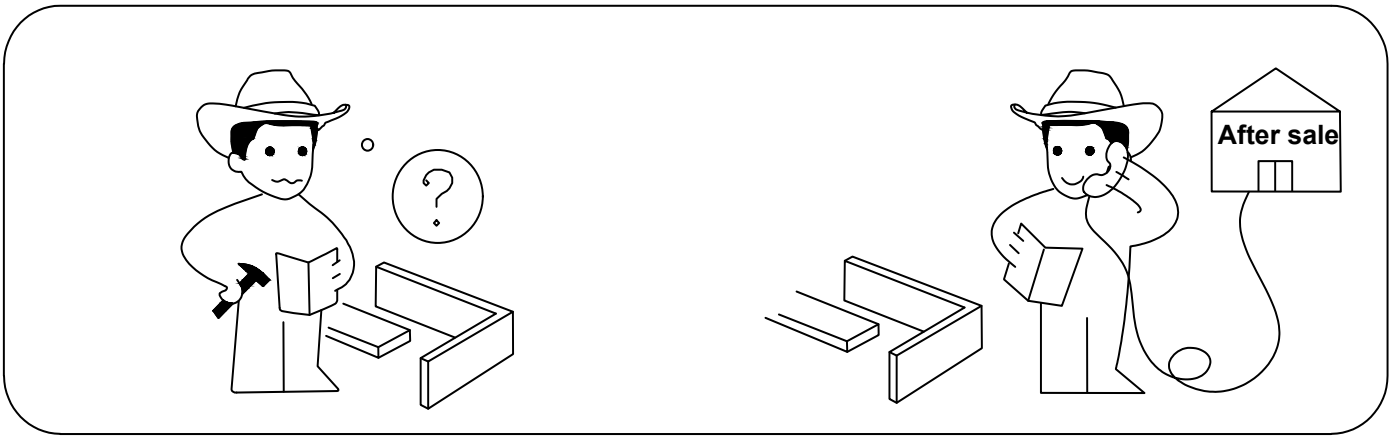
After sale

1x1*pc 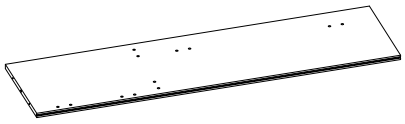	2x1*pc 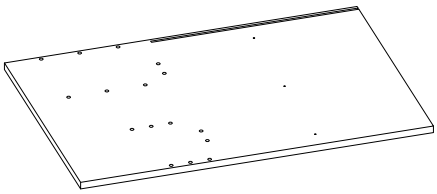	3x1*pc 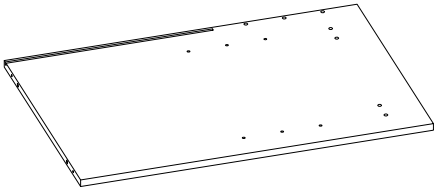
4x1*pc 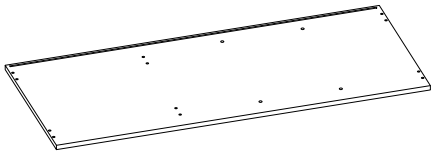	5x1*pc 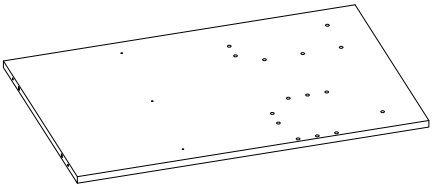	6x1*pc 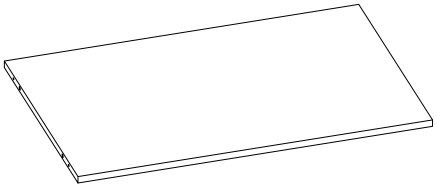
7x1*pc 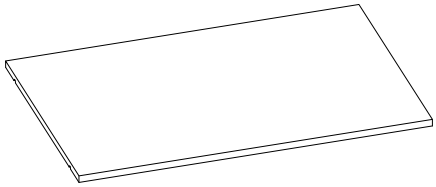	8x1*pc 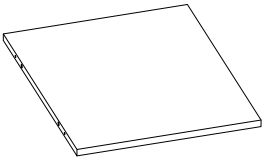	9x1*pc 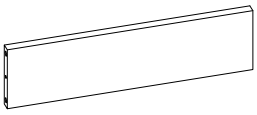
10x1*pc 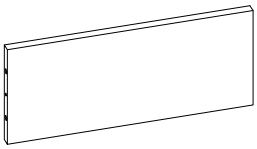	11x1*pc 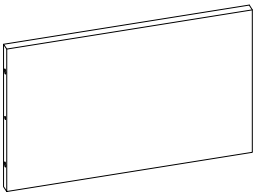	12x1*pc 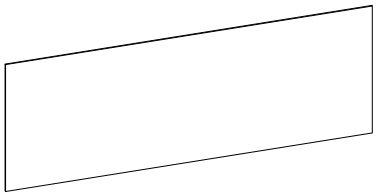
13x2*pcs 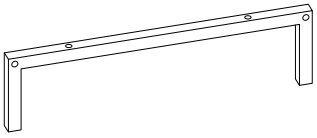	14x2*pcs 	15x1*pc 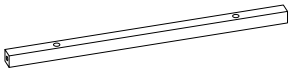

16x2*pcs 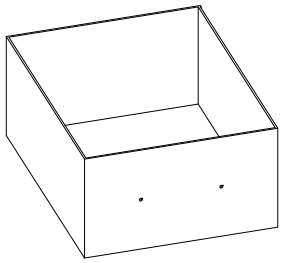	17x2*pcs 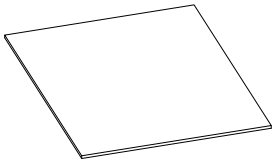	

Ax30*pcs 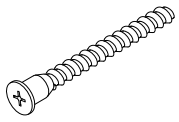	Bx34*pcs 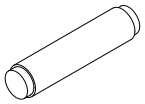	Cx16*pcs 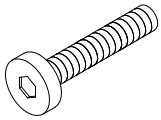	Dx2*pcs 	Ex4*pcs 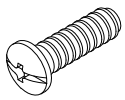	Fx6*pcs 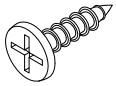	Gx4*pcs 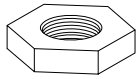
Hx8*pcs 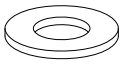	Kx4*pcs 	Lx30*pcs 	Mx1*pc 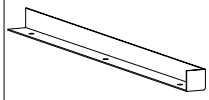	Px1*pc 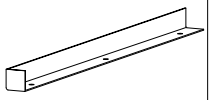	Nx1*pc 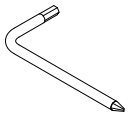	Ox1*pc 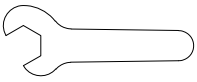
Ix2*pcs 	Qx4*pcs 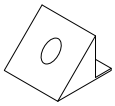	Rx4*pcs 				

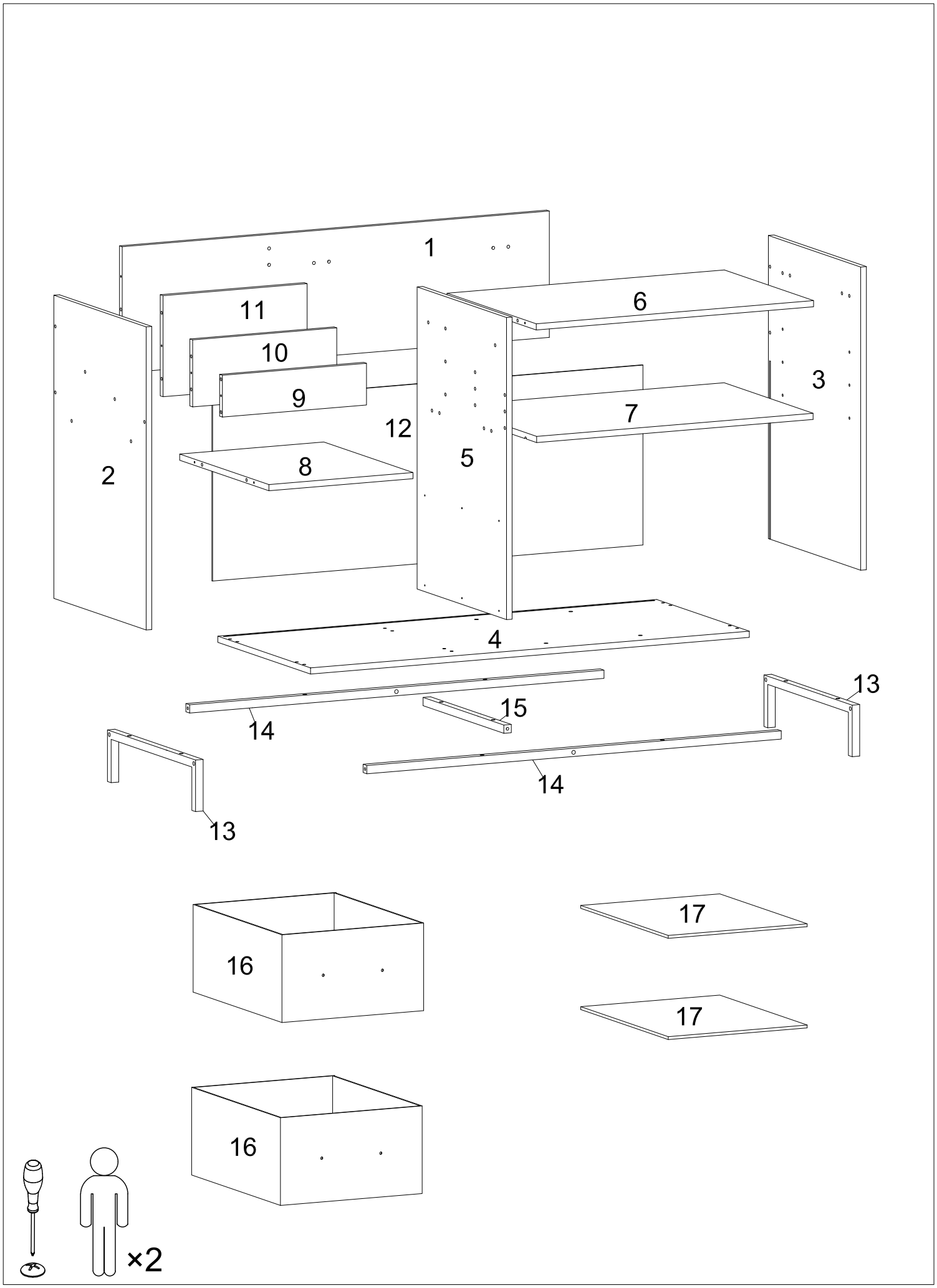
1
2
3
4
5
6
7
8
9
10
11
12
13
14
15
16
17
×2

1

Place accessory M on the side panel and secure them with three screws.

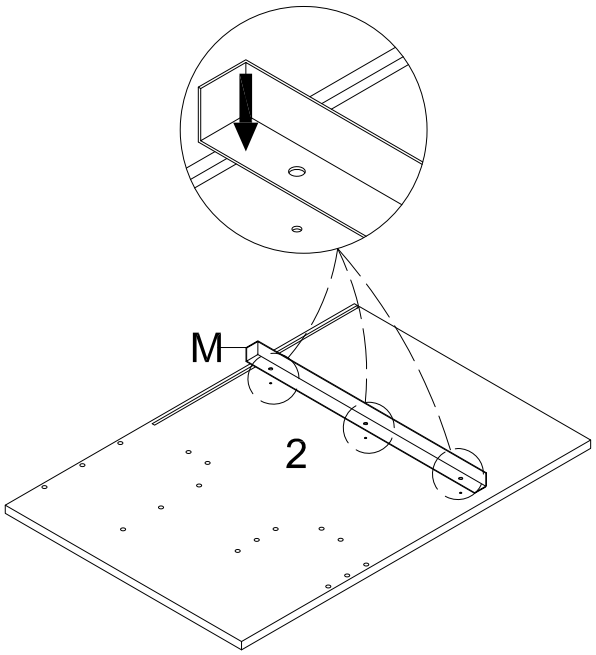

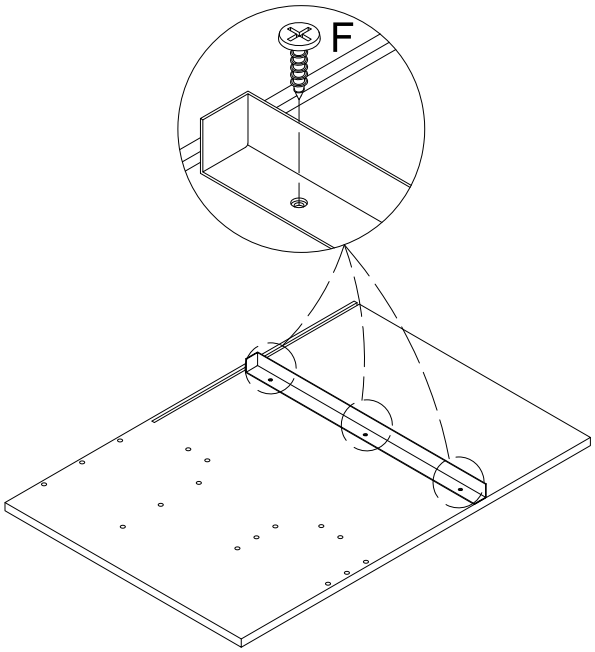

Fx3



2

Place accessory P on the side panel and secure them with three screws.

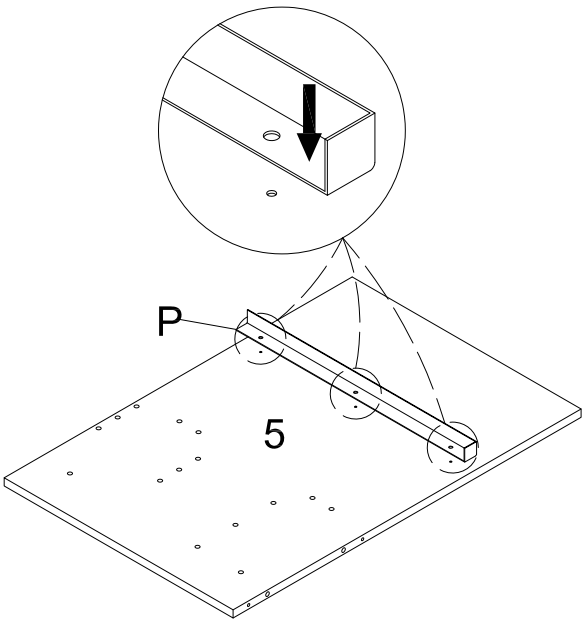

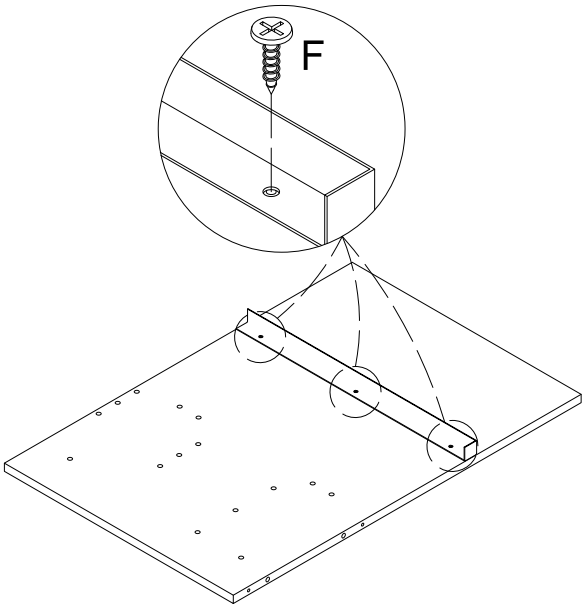

Fx3



3

Put these two panels together and secure them with two wooden tenons and two screws.

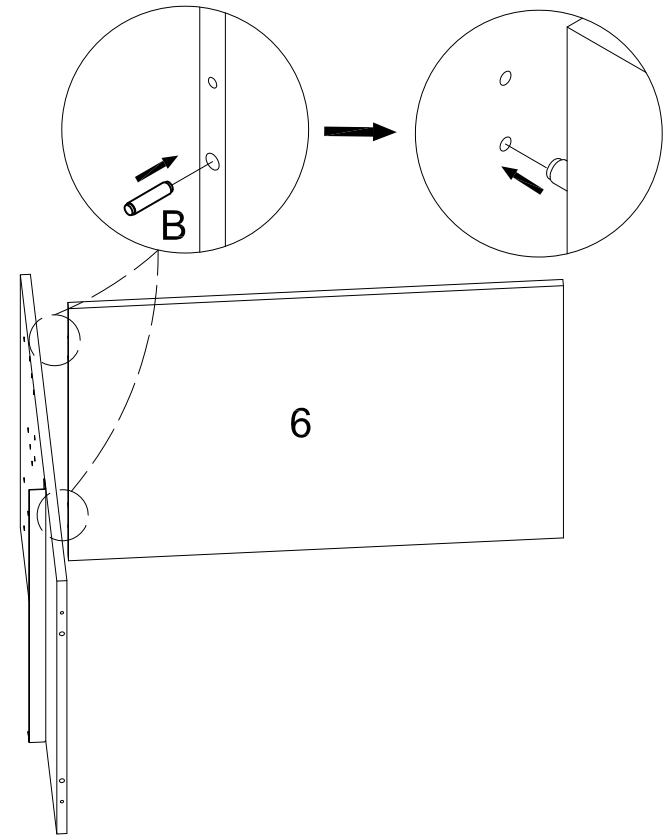

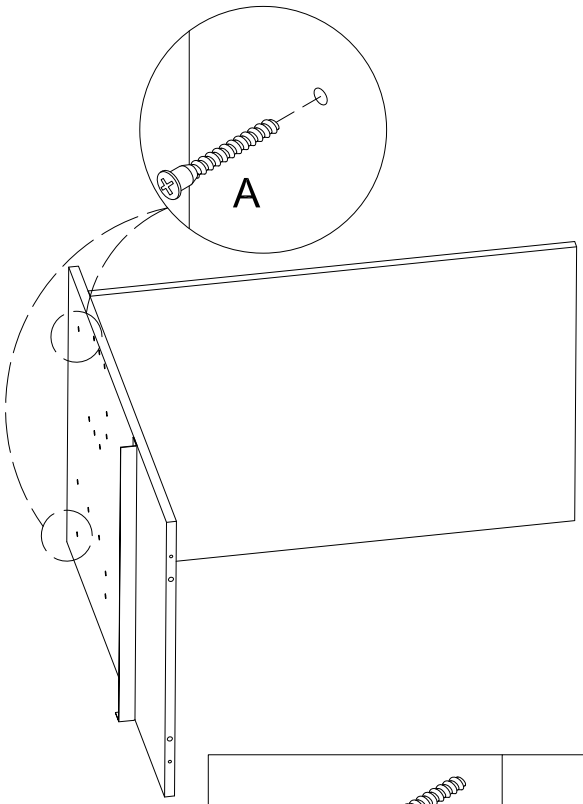

Ax2	Bx2

4

Put these panels together and secure them with two wooden tenons and two screws.

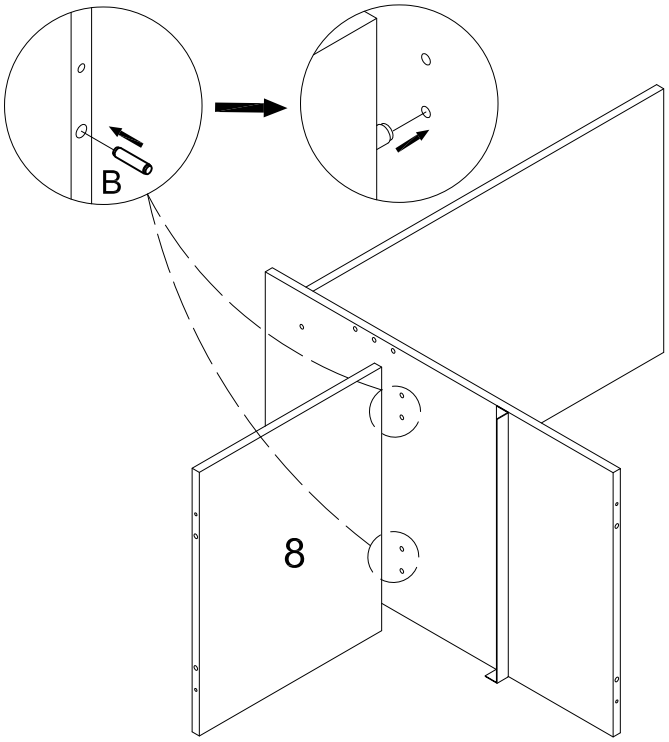

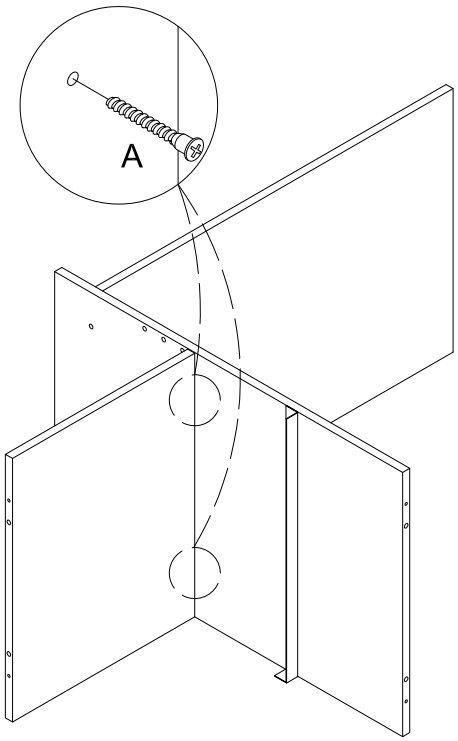

Ax2	Bx2

5

Put these panels together and secure them with six wooden tenons and six screws.

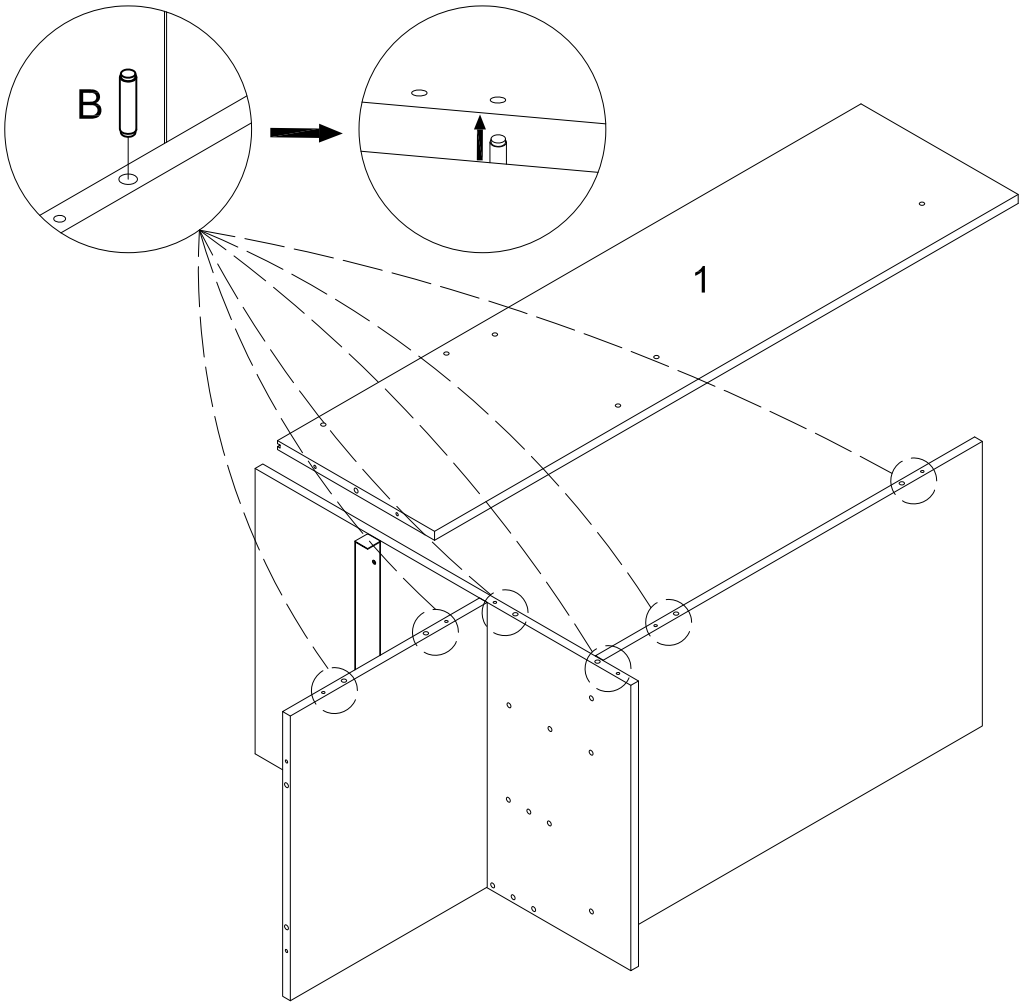

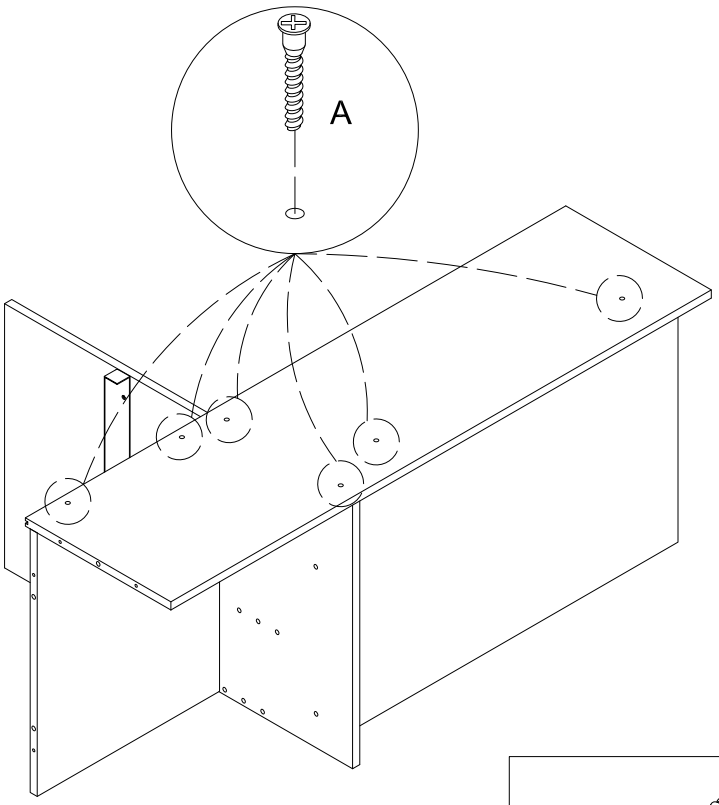

Ax6 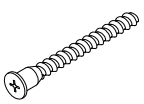	Bx6 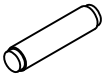

6

Put these panels together and secure them with three wooden tenons and four screws.

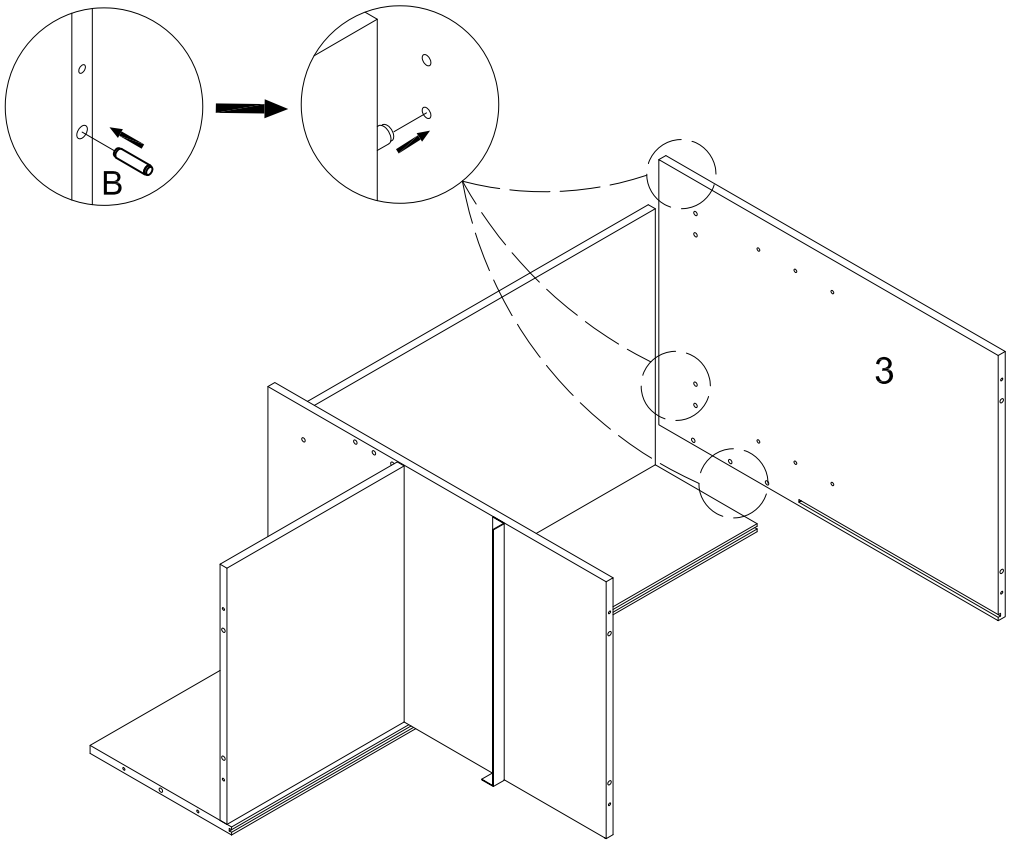

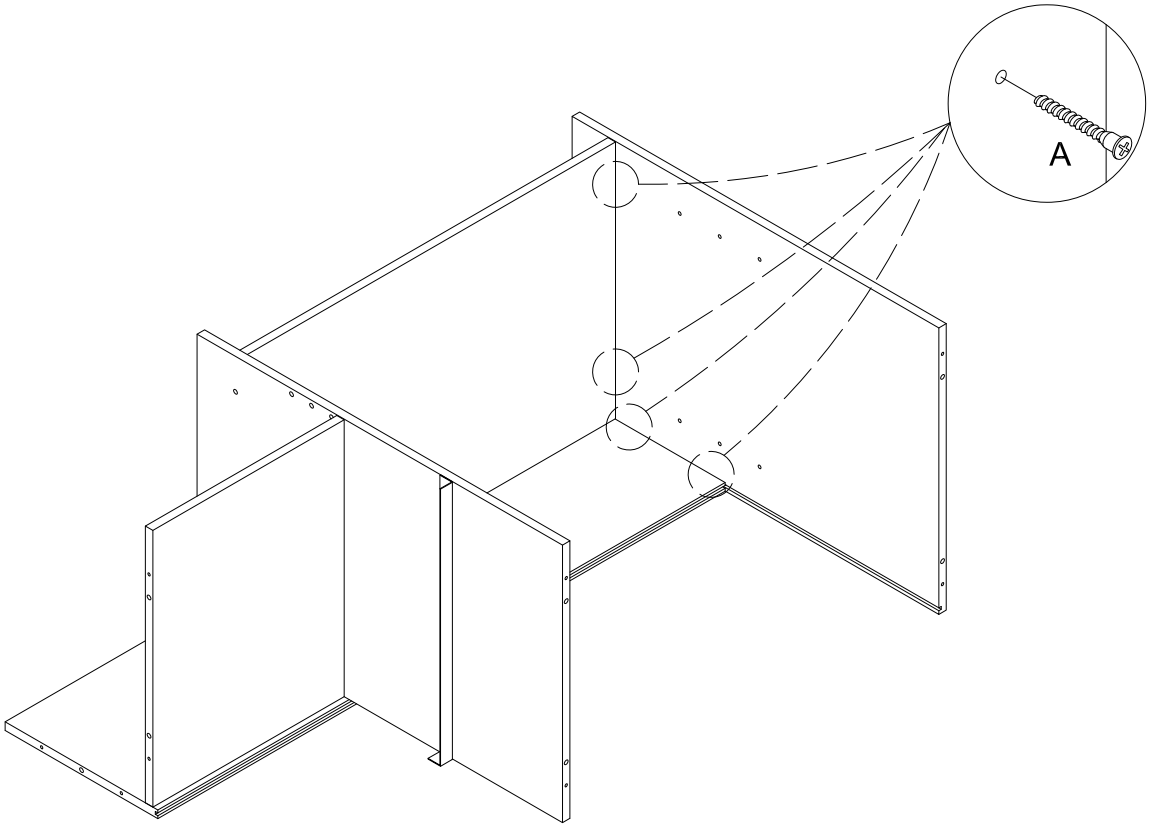

Ax4 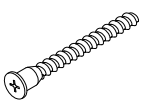	Bx3 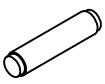

7

Put these panels together and secure them with six wooden tenons and three screws.

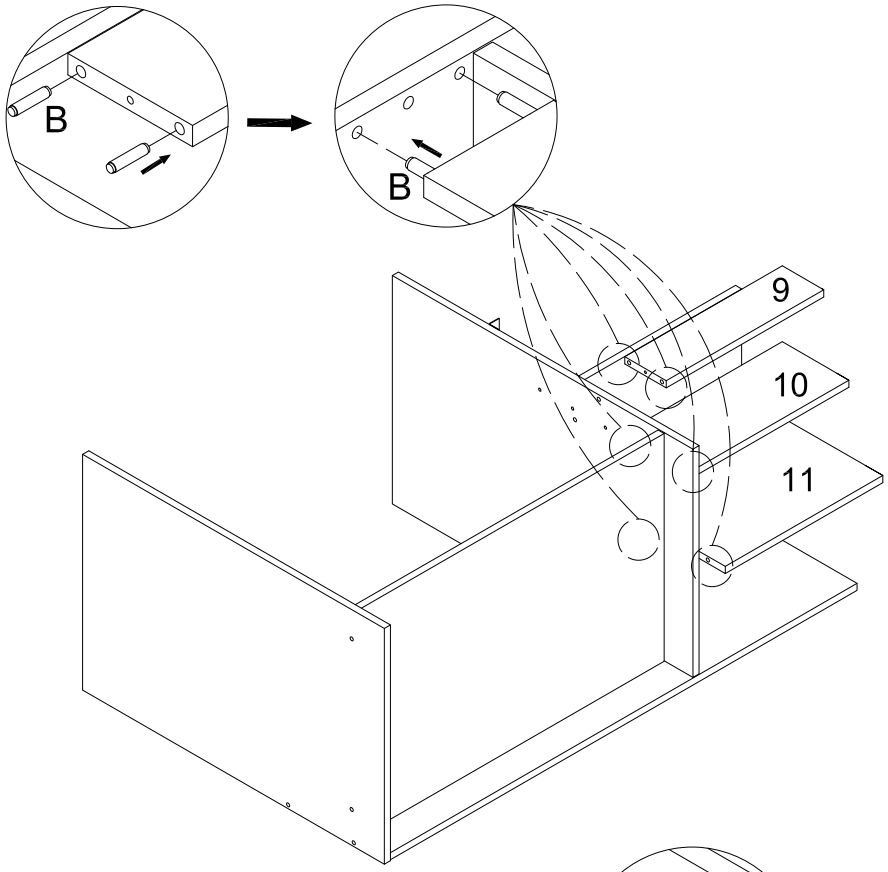

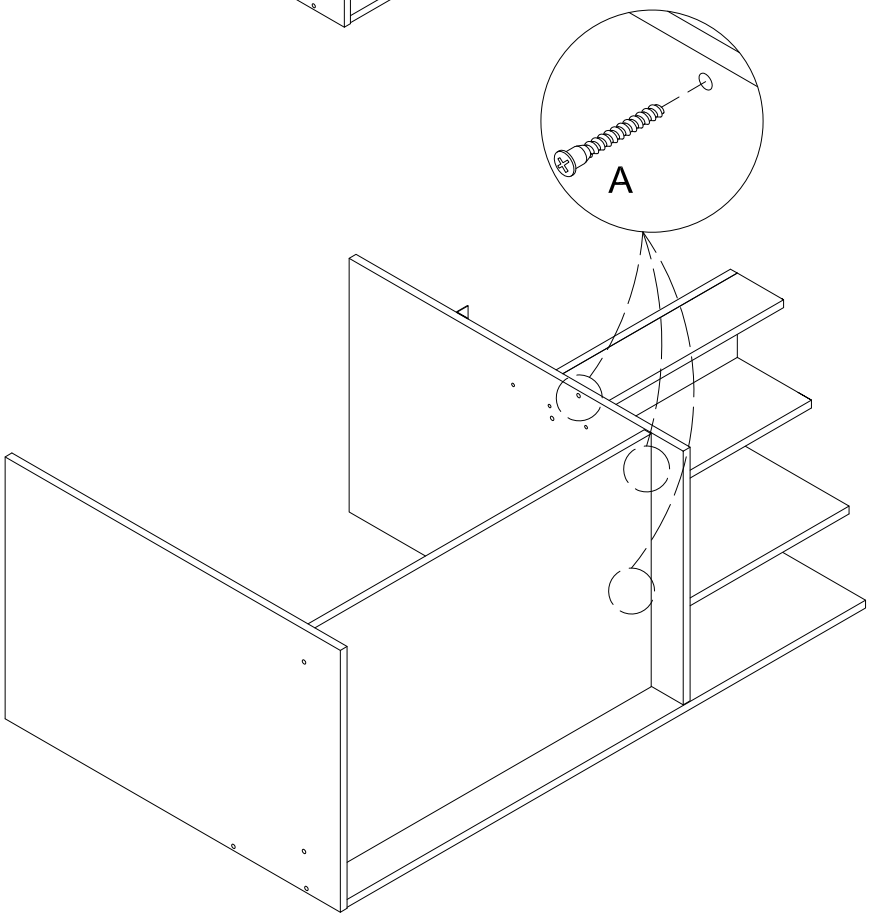

Ax3 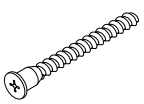	Bx6 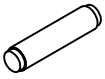

8

Put these panels together and secure them with nine wooden tenons and seven screws.

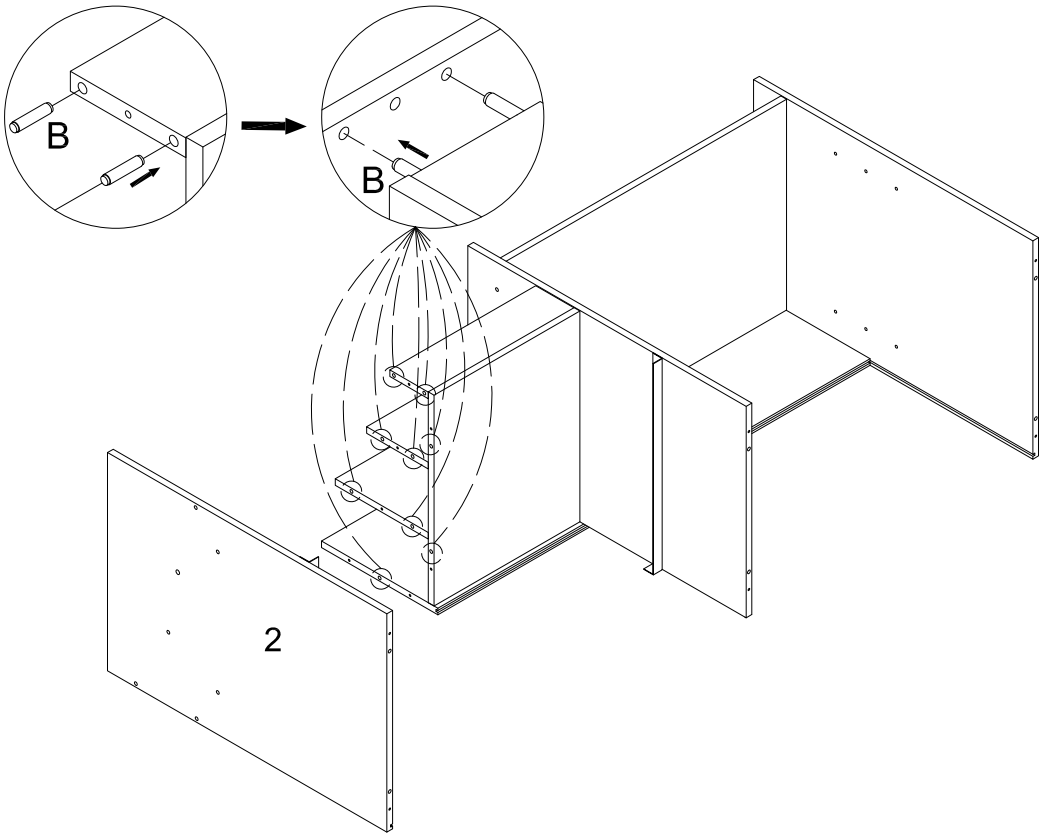

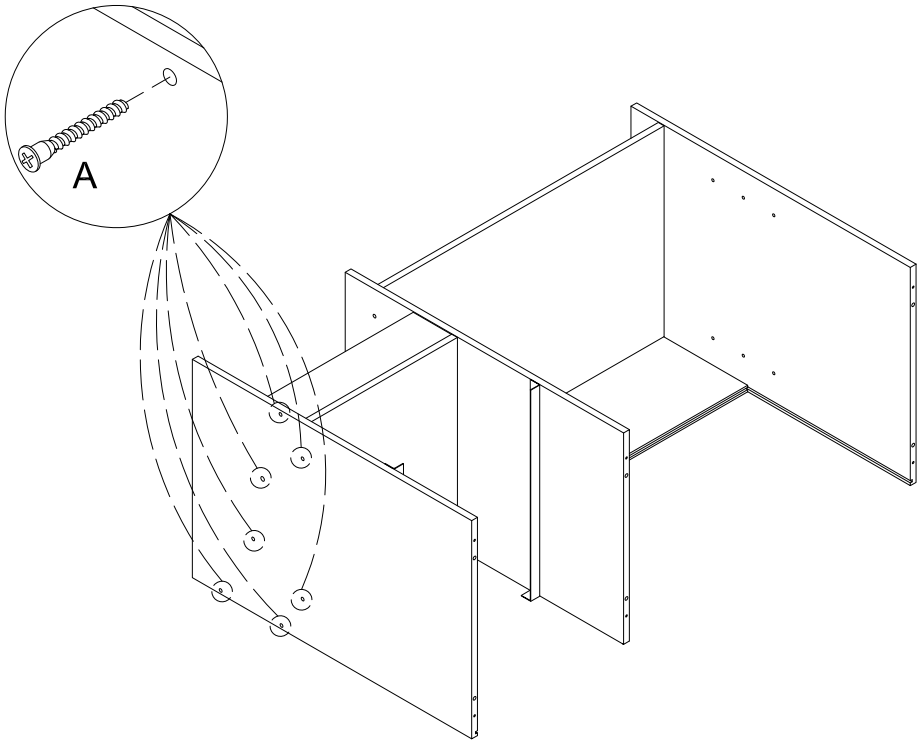

Ax7 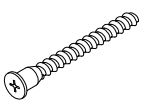	Bx9 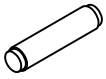

9

Insert the thin plate into the slot.

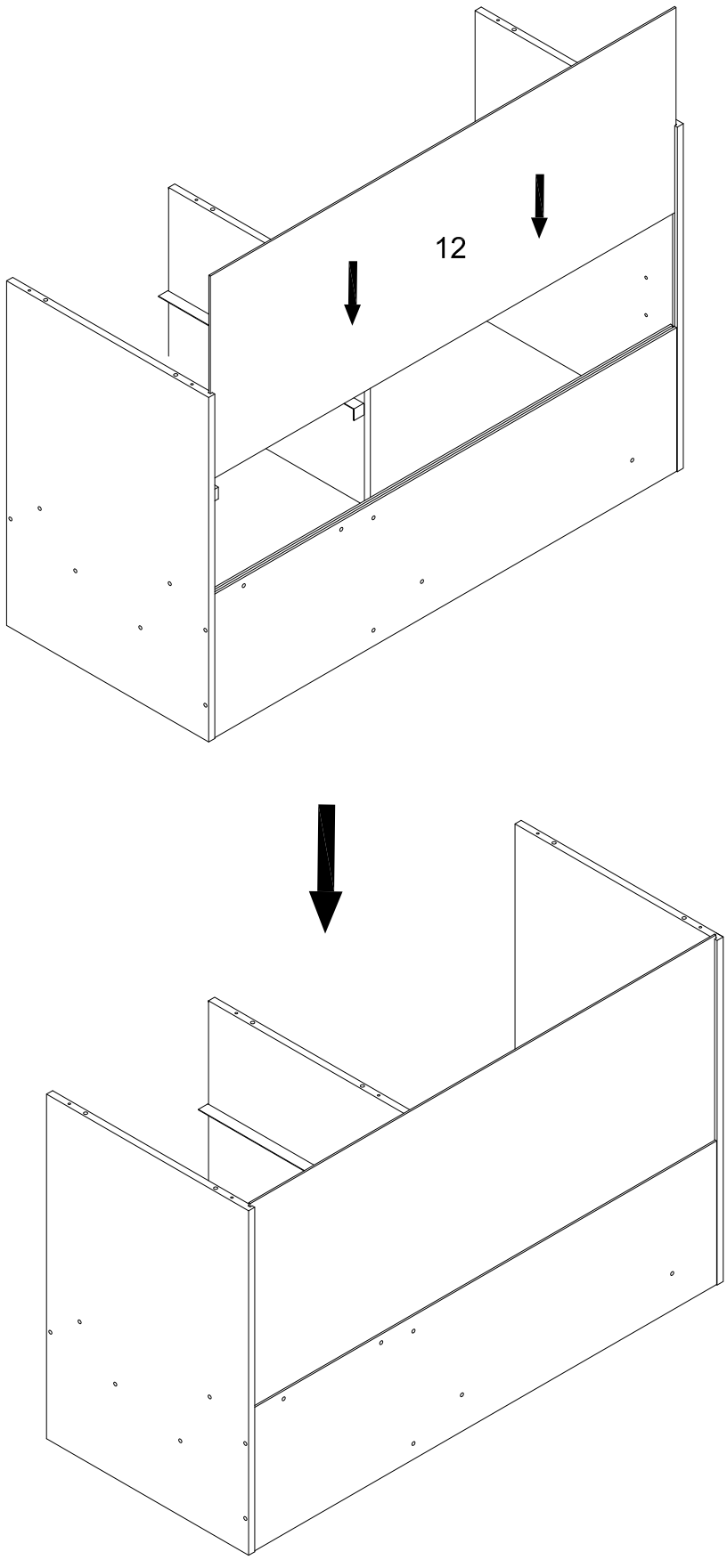

10

Put these panels together and secure them with six wooden tenons and six screws.

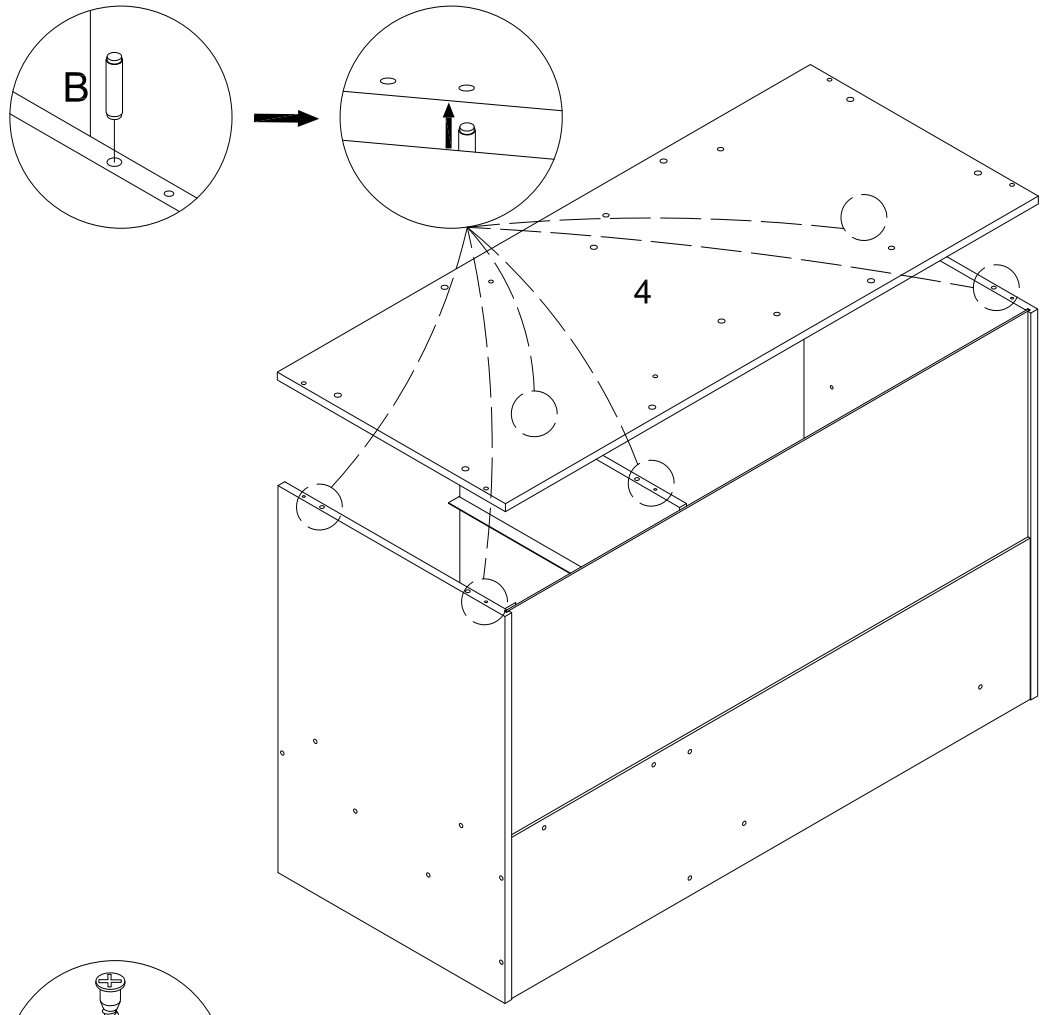

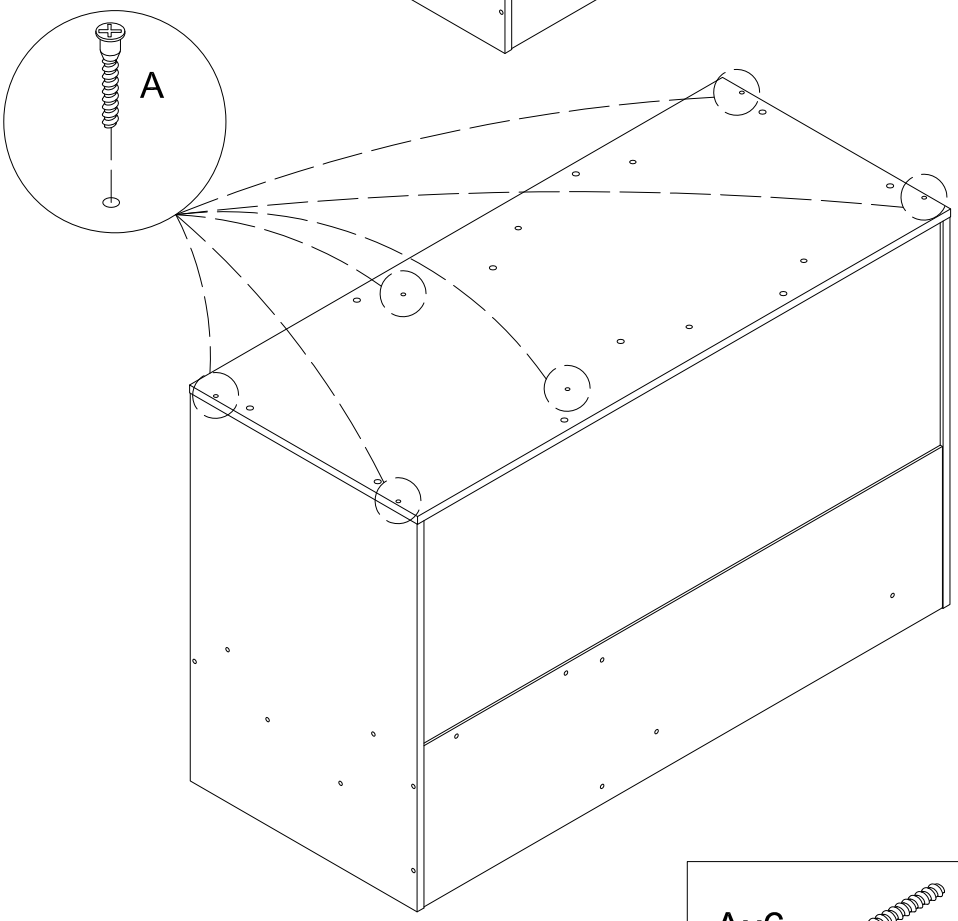

Ax6 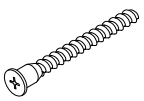

Bx6 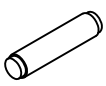

11

Put these iron pipes together and connect them with two screws.

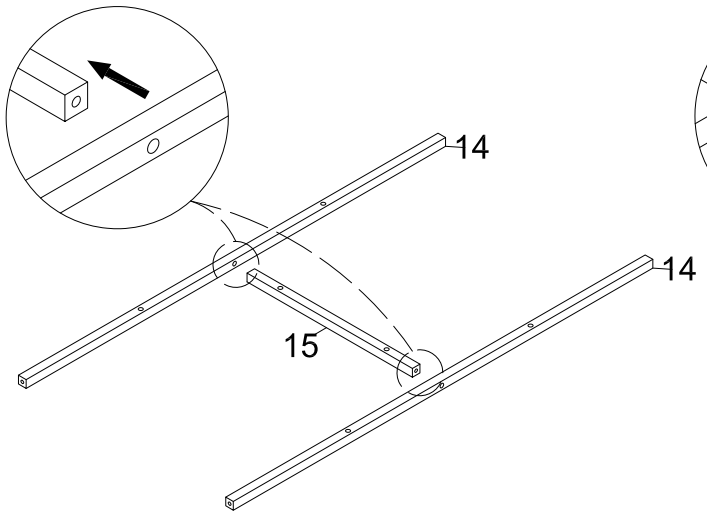

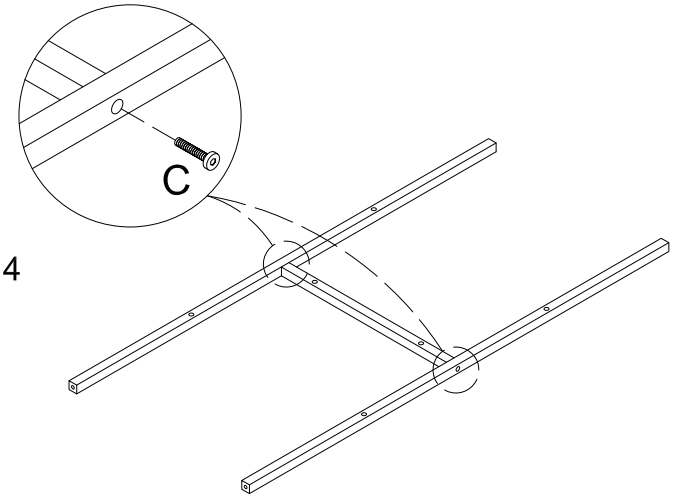

Cx2



12

Put these iron pipes together and connect them with four screws.

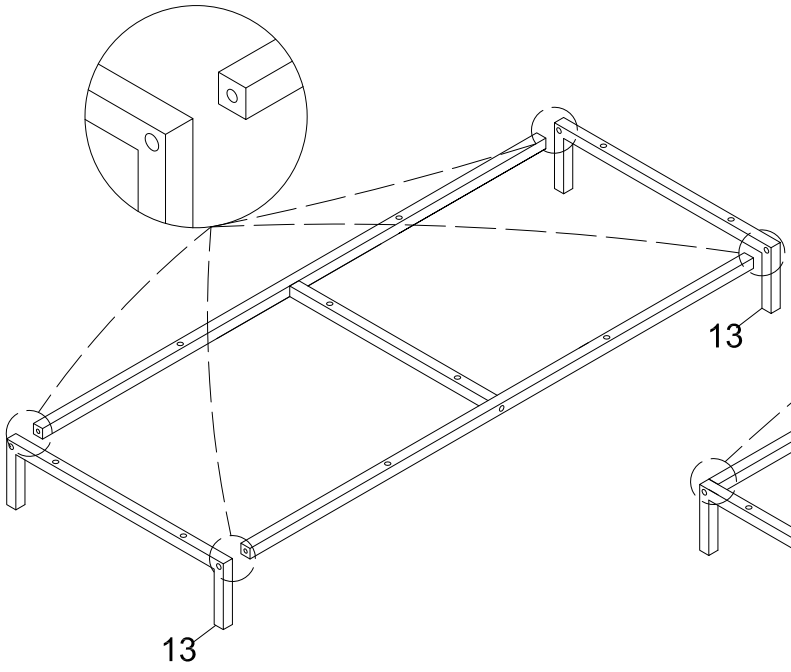

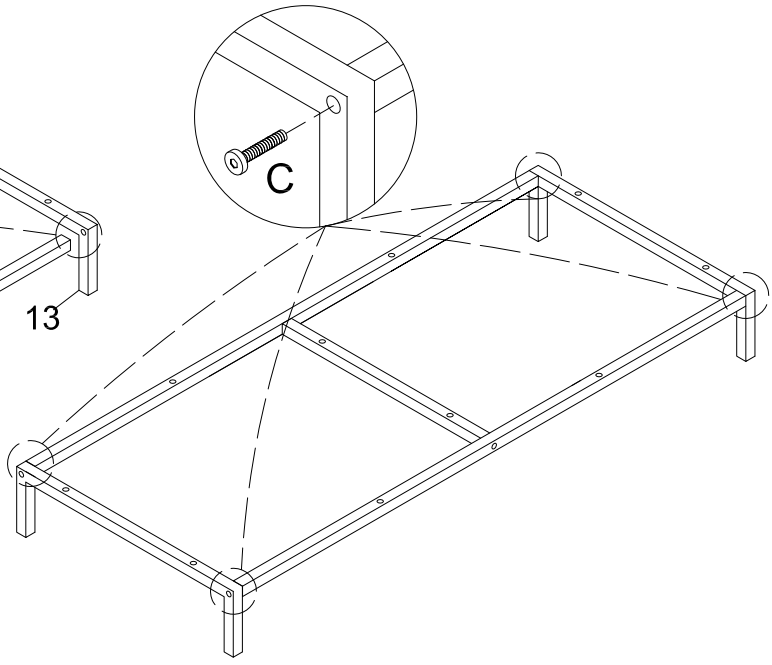

Cx4

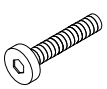

13

Put these iron frames and wooden boards together and connect them with ten screws.

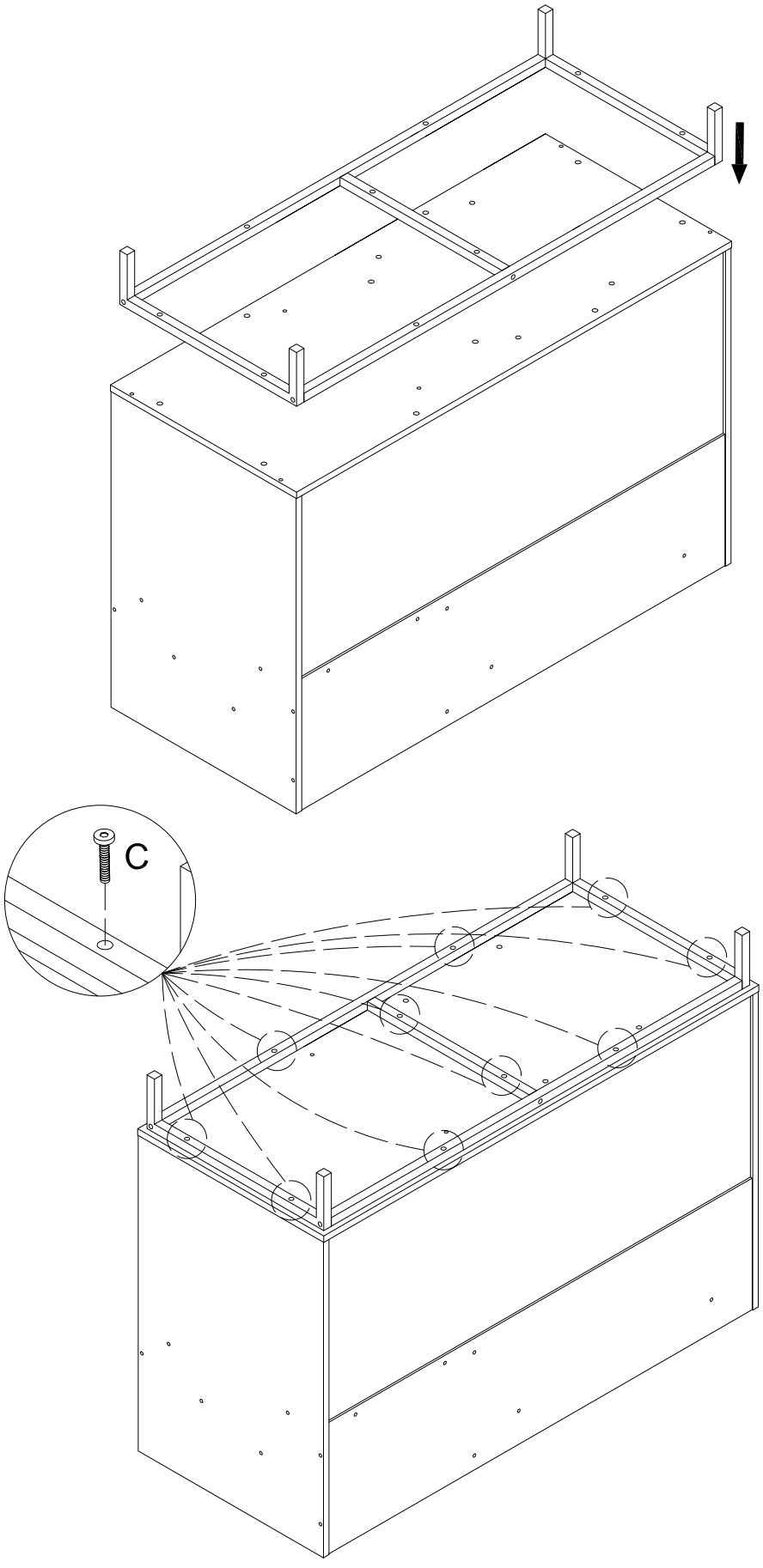

Cx10

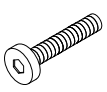

14

Place the four backboards on the thin plate and secure them with four screws.

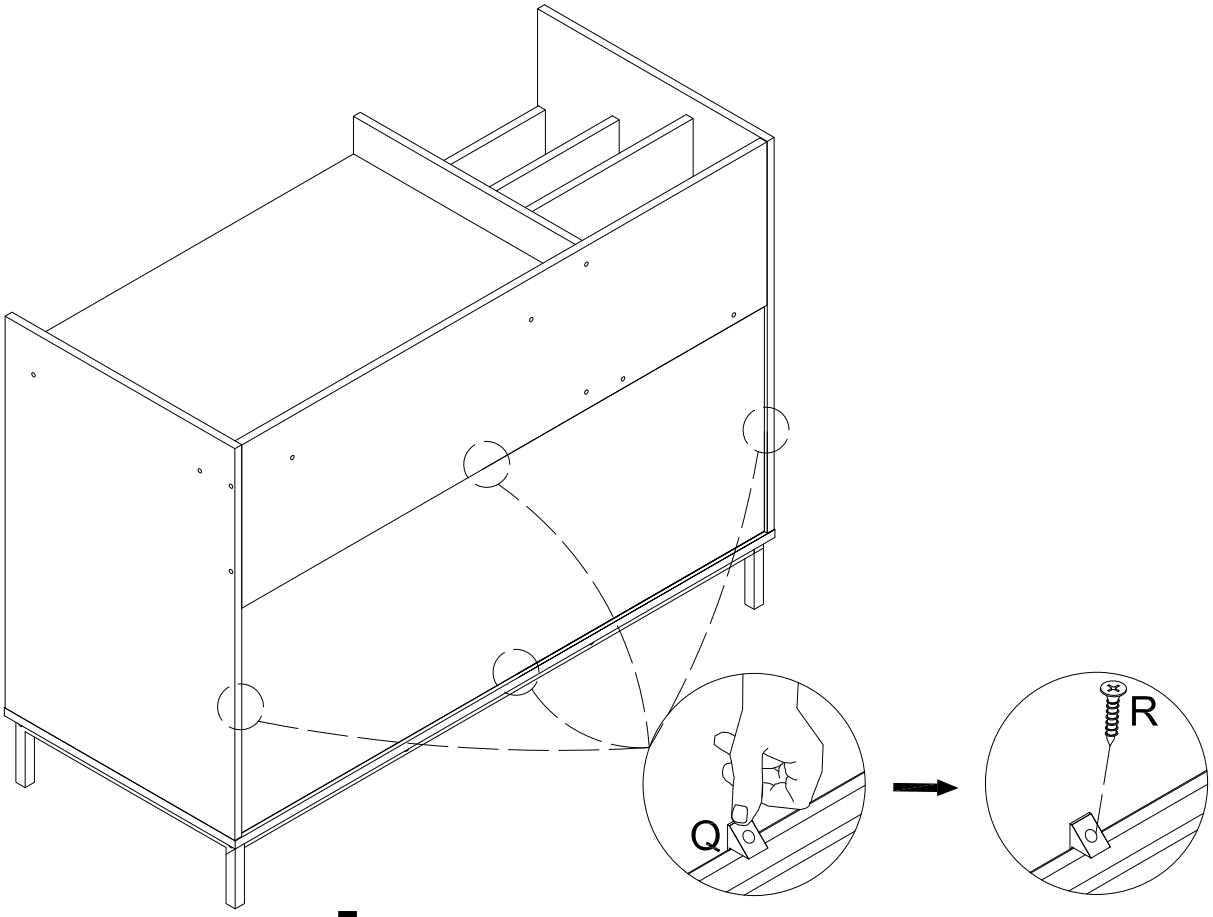

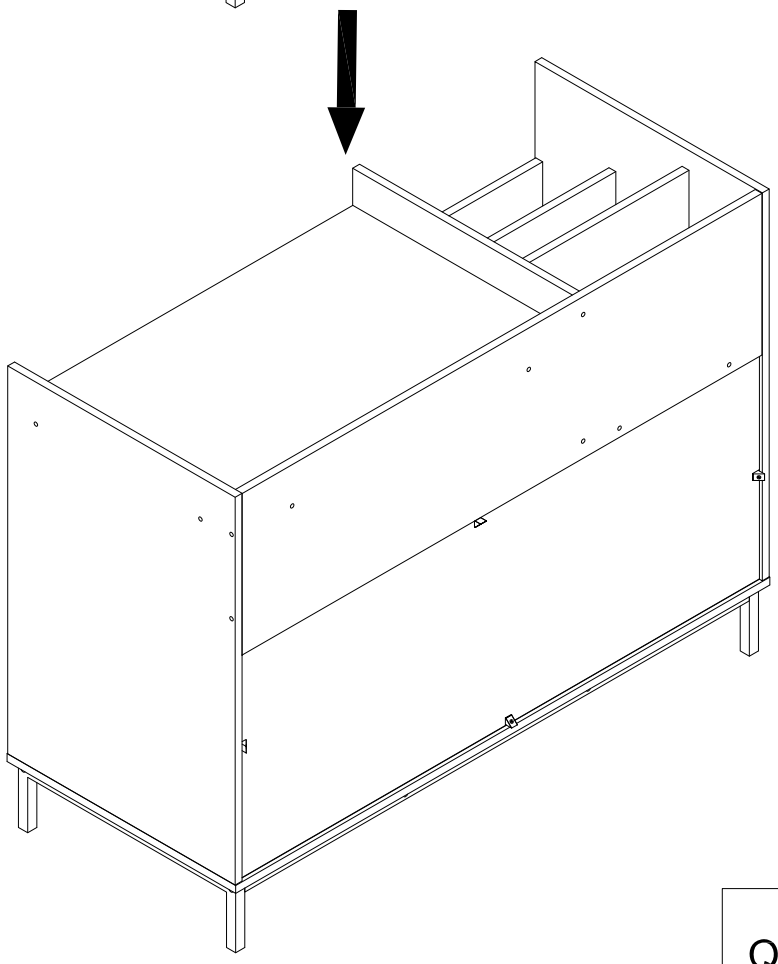

Qx4	Rx4

15

Insert two iron wires into the board and secure them with four nuts and padding .

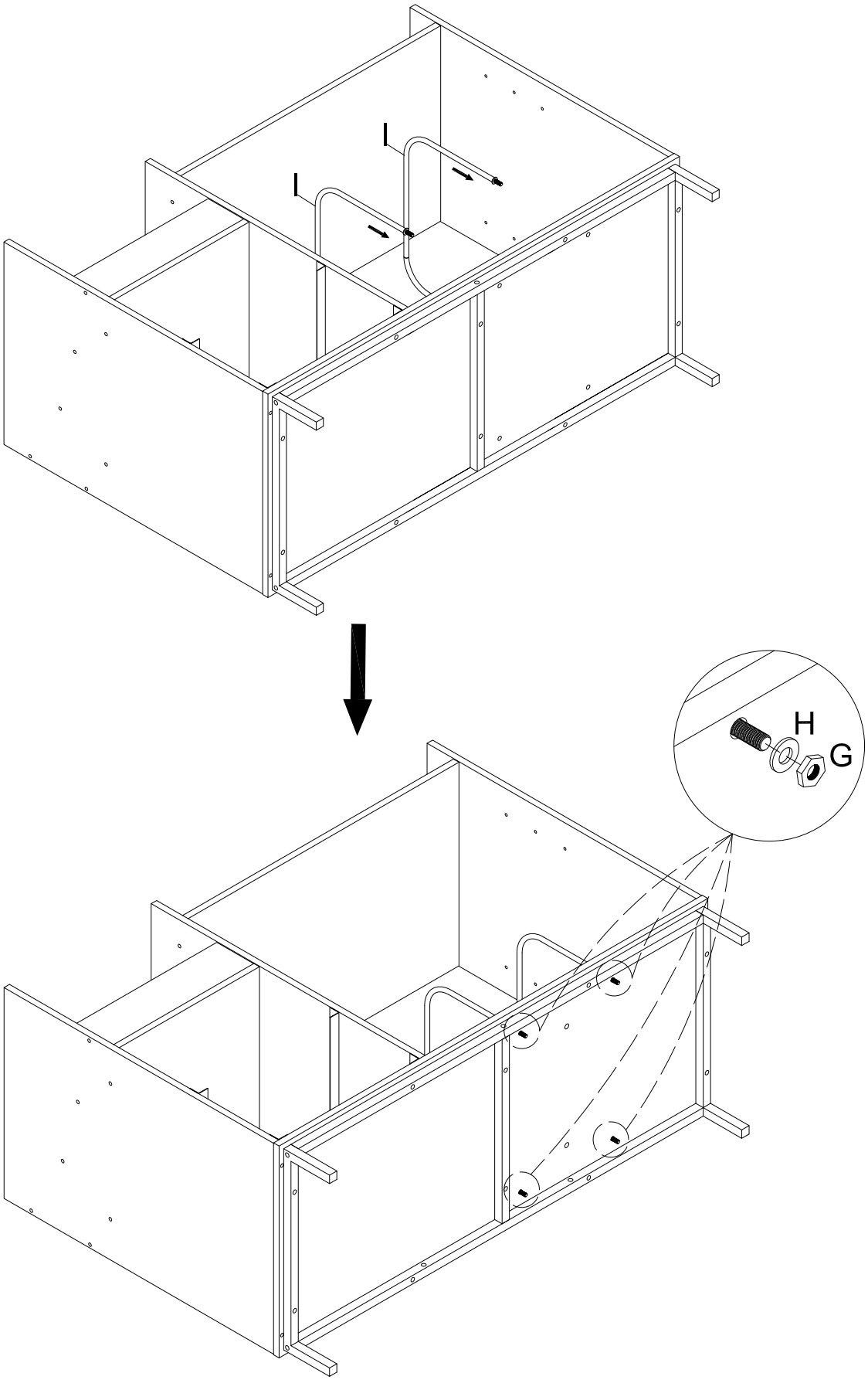

Ix2	Hx4	Gx4

16

Insert the laminated board holder into the board and place the laminated board on the laminated board holder.

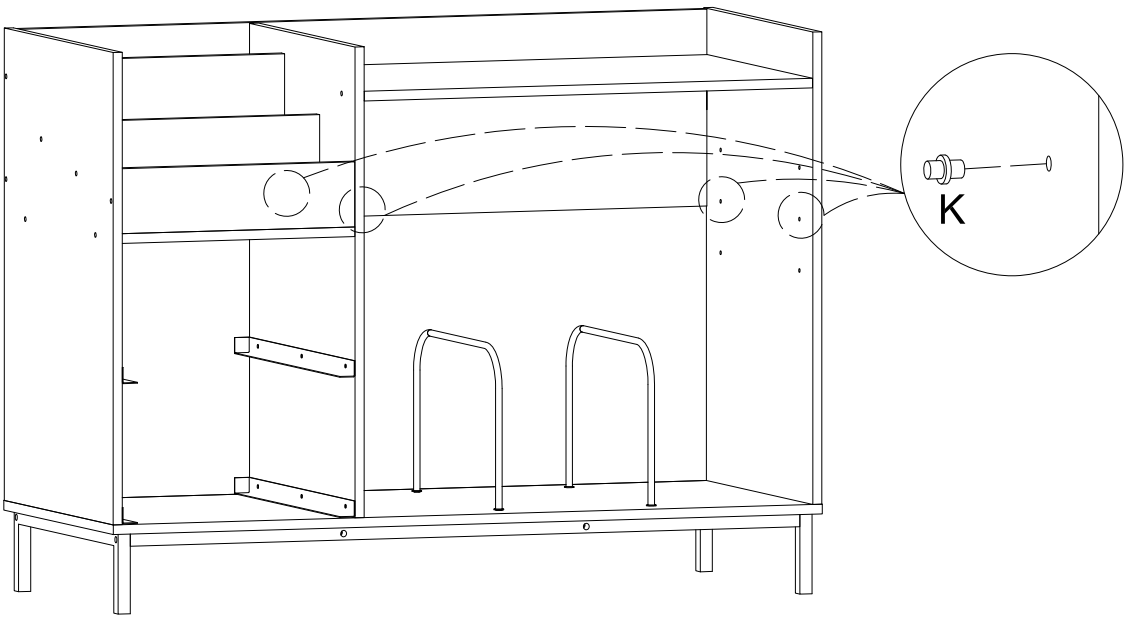

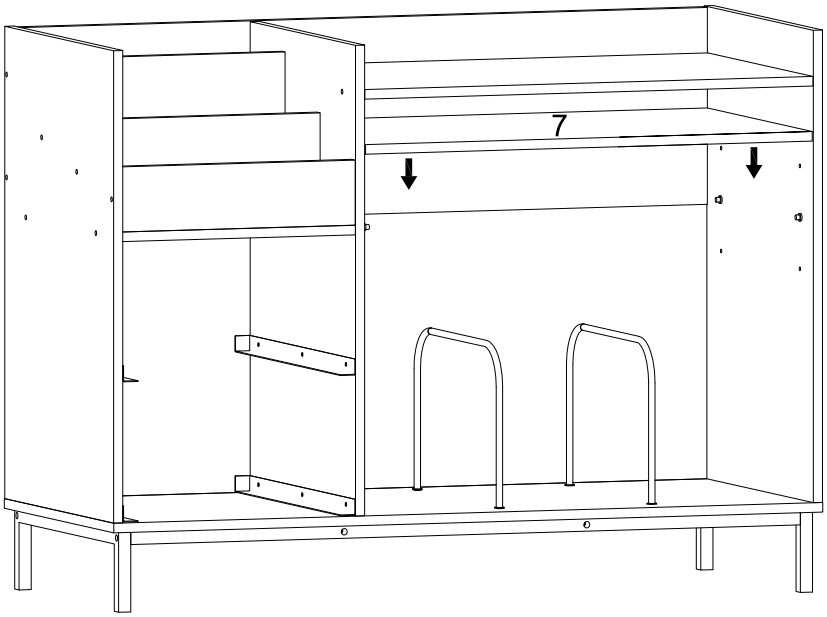

Kx4

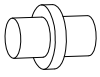

17

Pull two cloths together, place the padding inside and lock the handle with four nuts and padding.

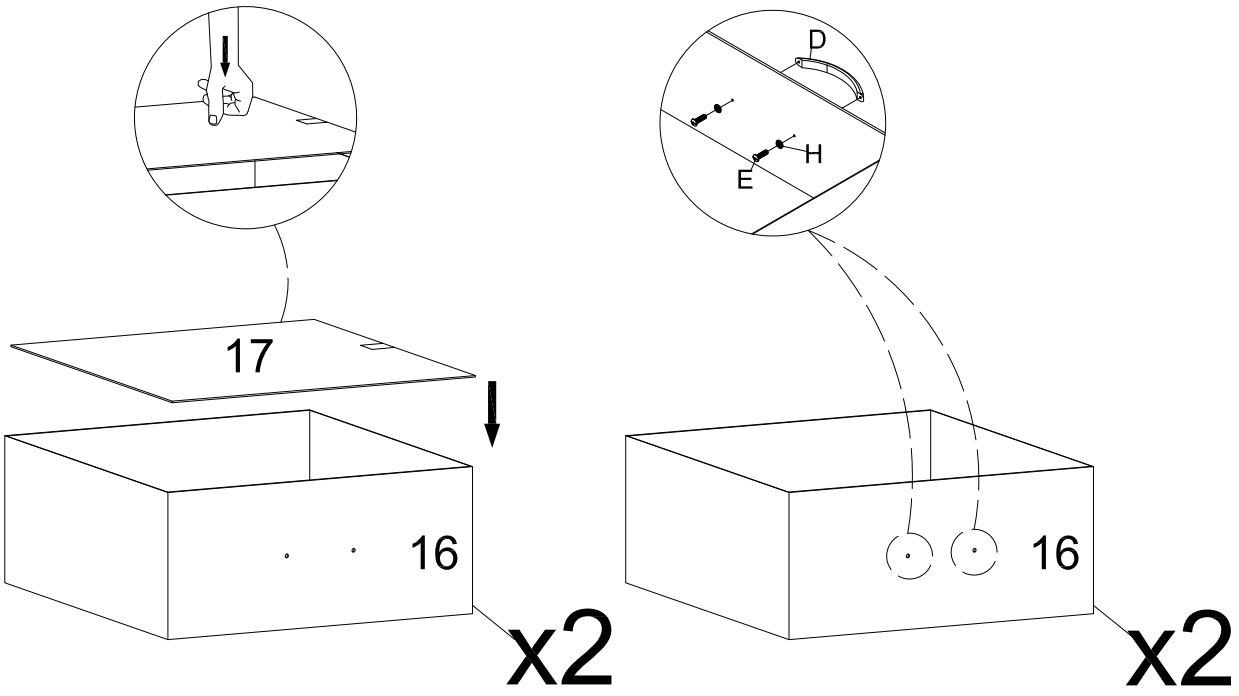

Dx2	Ex4	Hx4

18

Put the fabric drawer into the drawer holder.

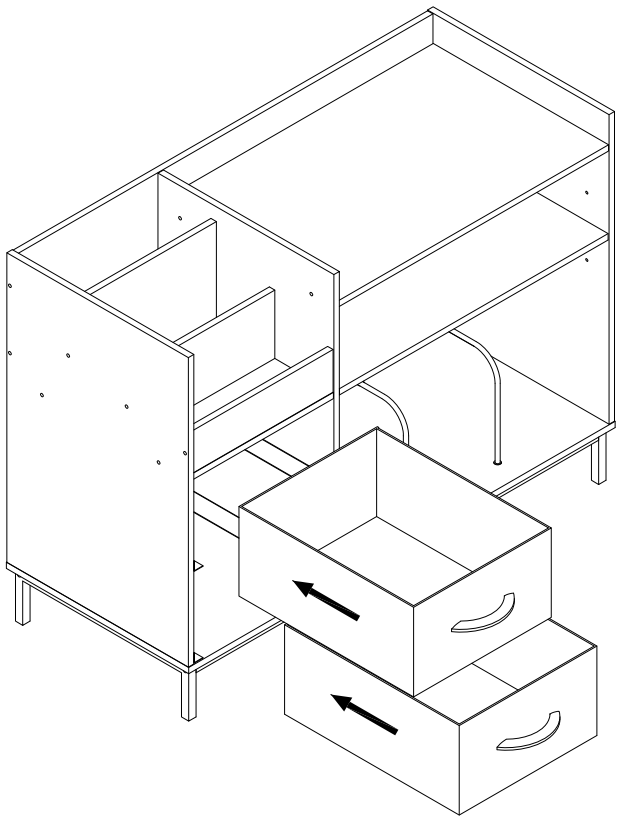

19

Attach visible holes with hole stickers.

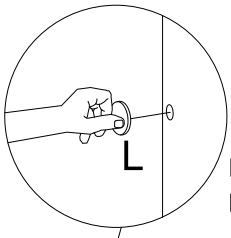

Hole position is hidden by
pasting a hole sticker !

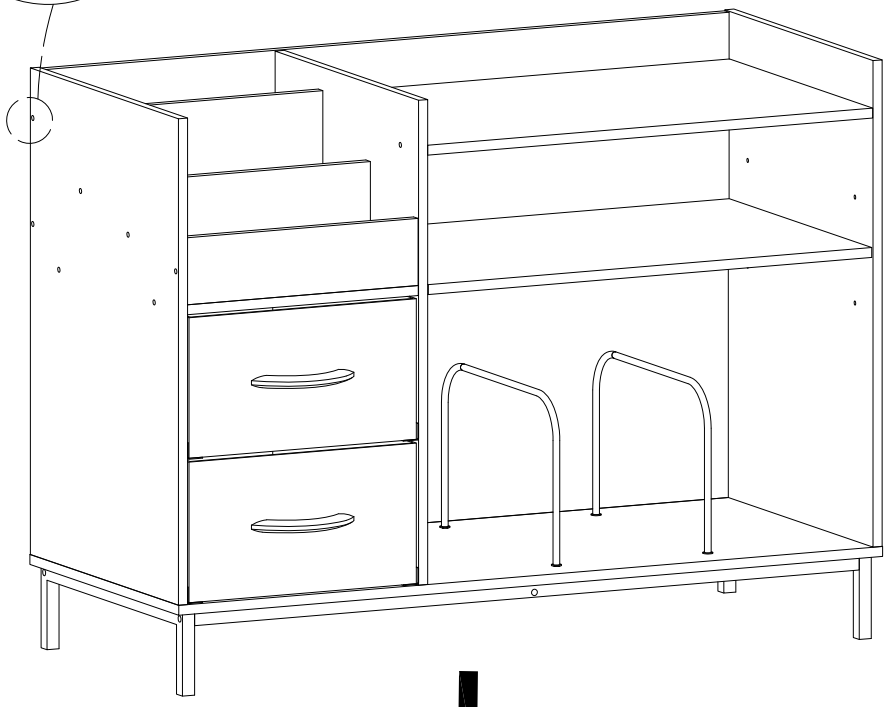

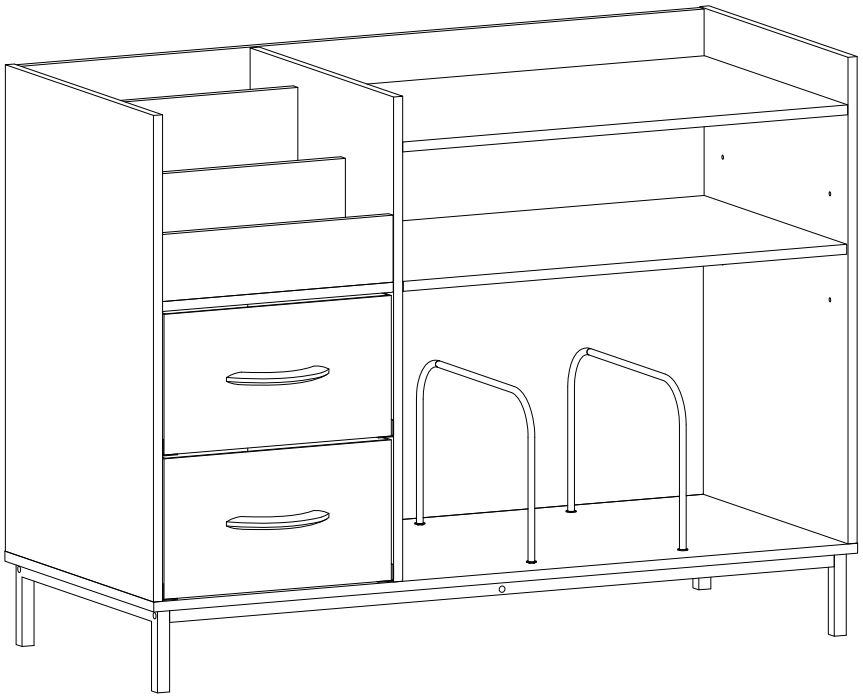

Lx30

