COASTER
FINE FURNITURE

ASSEMBLY INSTRUCTIONS
COASTER FINE FURNITURE



Fine Furniture for every stage of life

736077
End Table

REVISION 0 : 07/20/2026

ITEM: **736077**

ASSEMBLY INSTRUCTIONS

ASSEMBLY TIPS:

1. Remove hardware from box and sort by size.
2. Please check to see that all hardware and parts are present prior to start of assembly.
3. Please follow attached instructions in the same sequence as numbered to assure fast & easy assembly.

WARNING!

1. Don't attempt to repair or modify parts that are broken or defective. Please contact the store immediately.
2. This product is for home use only and not intended for commercial establishments.



ASSEMBLY TIME	15 MINUTES

PARTS IDENTIFICATION

A	TOP	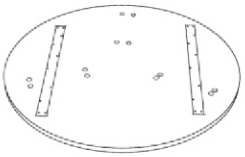	1PC
B	LEG	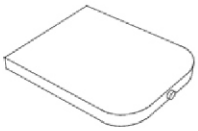	3PCS
C	MOUNTING PLATE	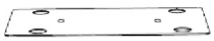	3PCS

HARDWARE IDENTIFICATION

1	BOLT (M6 X 20mm - BLK)	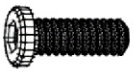	18PCS
2	FLAT WASHER (M10 X 25mm - BLK)		12PCS
3	ALLEN WRENCH (4mm - BLK)		1PC

ITEM: **736077**

ASSEMBLY INSTRUCTIONS

STEP 1

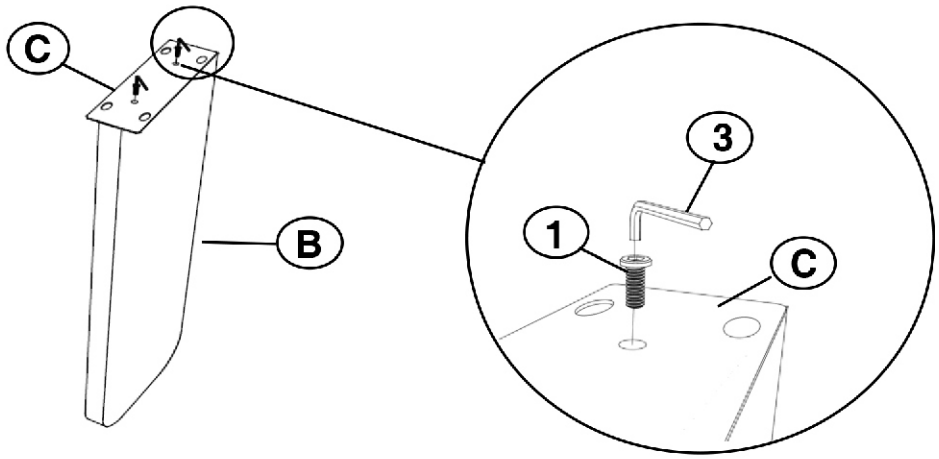

STEP 2

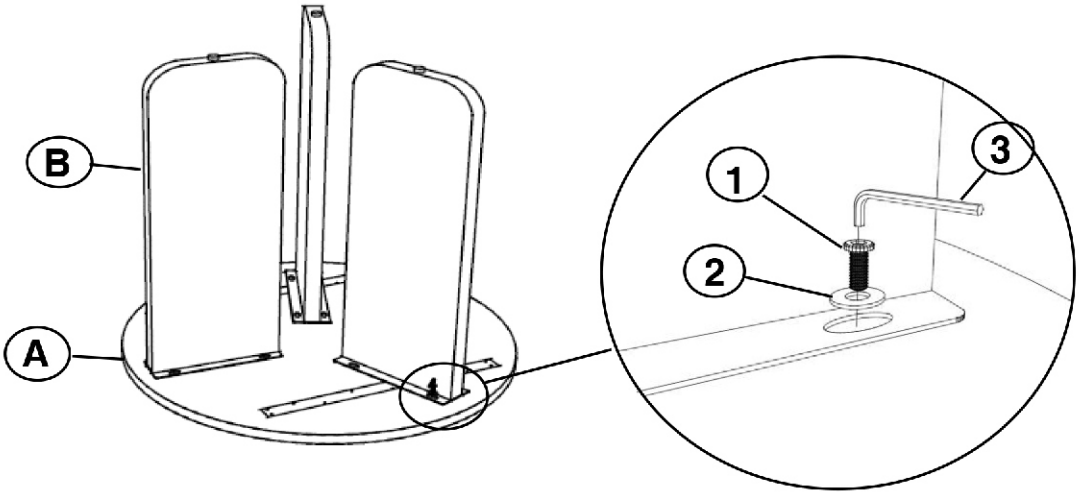

BOTTOM VIEW

STEP 3
COMPLETE

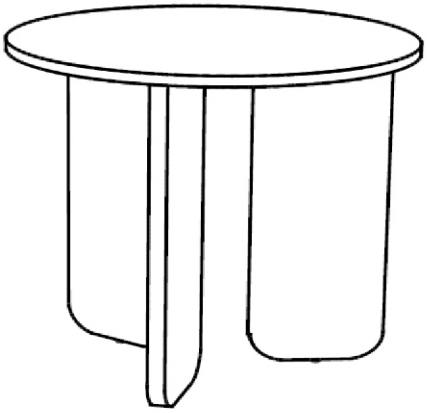

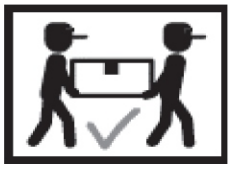

ITEM: **736077**

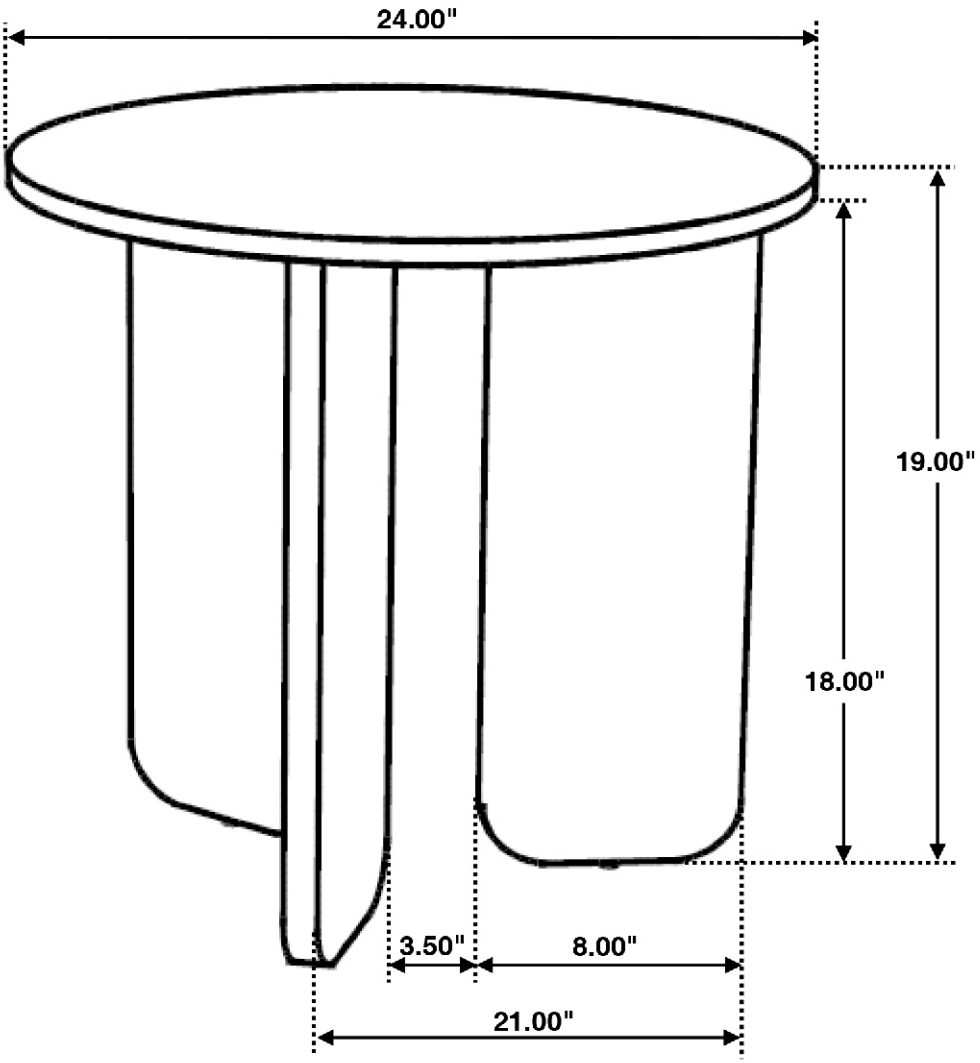

Note : Dimension tolerance ±5%

COASTER
FINE FURNITURE

ASSEMBLY INSTRUCTIONS
COASTER FINE FURNITURE



Fine Furniture for every stage of life

736078
Coffee Table

REVISION 0 : 07/20/2026

COASTERFURNITURE.COM

ITEM: **736078**

ASSEMBLY INSTRUCTIONS

ASSEMBLY TIPS:

1. Remove hardware from box and sort by size.
2. Please check to see that all hardware and parts are present prior to start of assembly.
3. Please follow attached instructions in the same sequence as numbered to assure fast & easy assembly.

WARNING!

1. Don't attempt to repair or modify parts that are broken or defective. Please contact the store immediately.
2. This product is for home use only and not intended for commercial establishments.



ASSEMBLY TIME	15 MINUTES

PARTS IDENTIFICATION

A	TOP	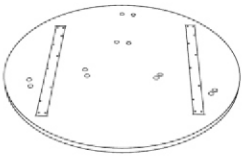	1PC
B	LEG	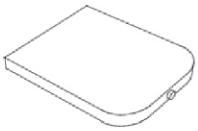	3PCS
C	MOUNTING PLATE		3PCS

HARDWARE IDENTIFICATION

1	BOLT (M6 X 20mm - BLK)		18PCS
2	FLAT WASHER (M10 X 25mm - BLK)		12PCS
3	ALLEN WRENCH (4mm - BLK)		1PC

ITEM: **736078**

ASSEMBLY INSTRUCTIONS

STEP 1

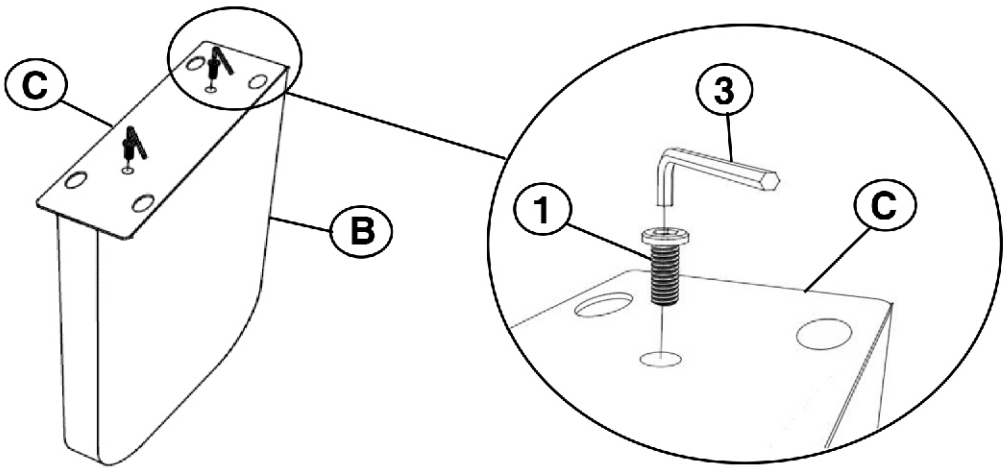

STEP 2

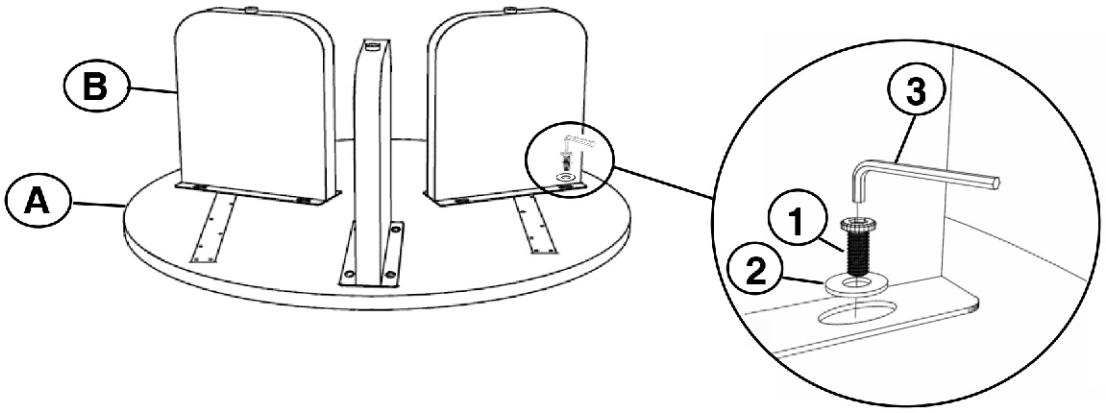

BOTTOM VIEW

STEP 3
COMPLETE

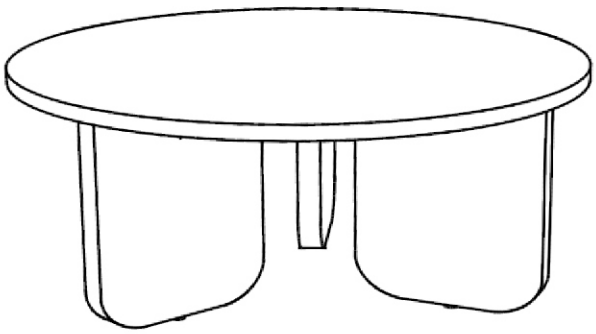

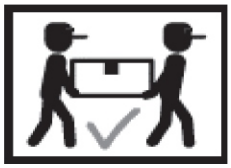

ITEM: **736078**

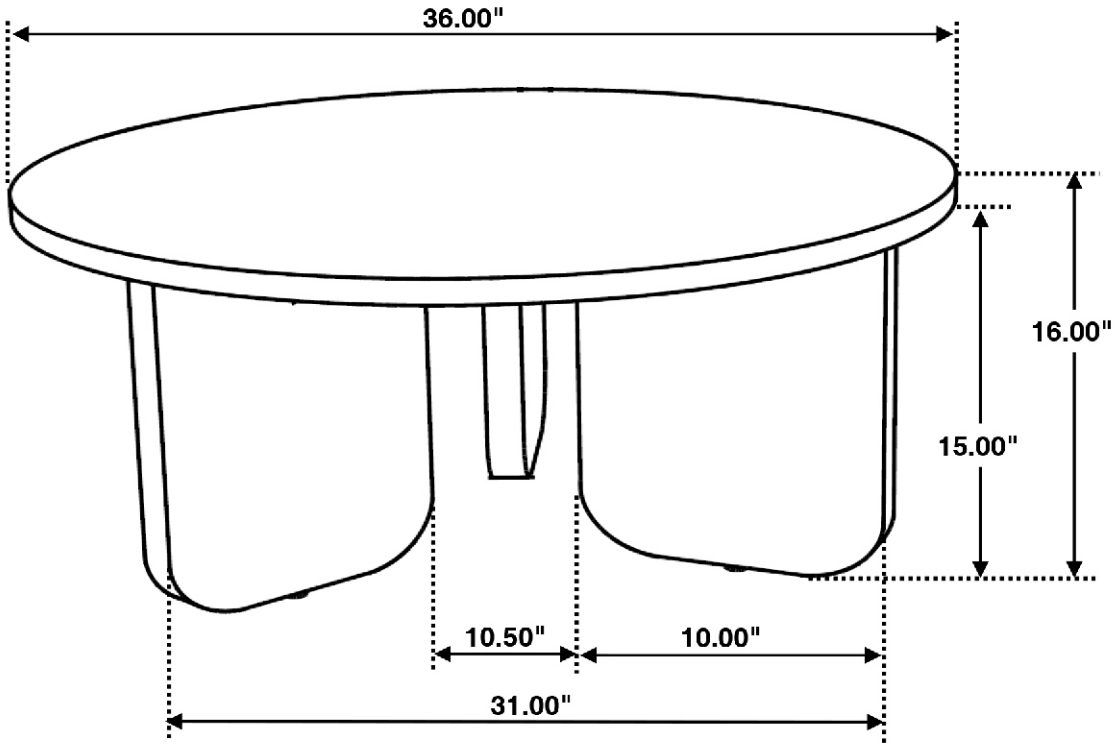

Note : Dimension tolerance ±5%