ASSEMBLY INSTRUCTIONS

DJ0679

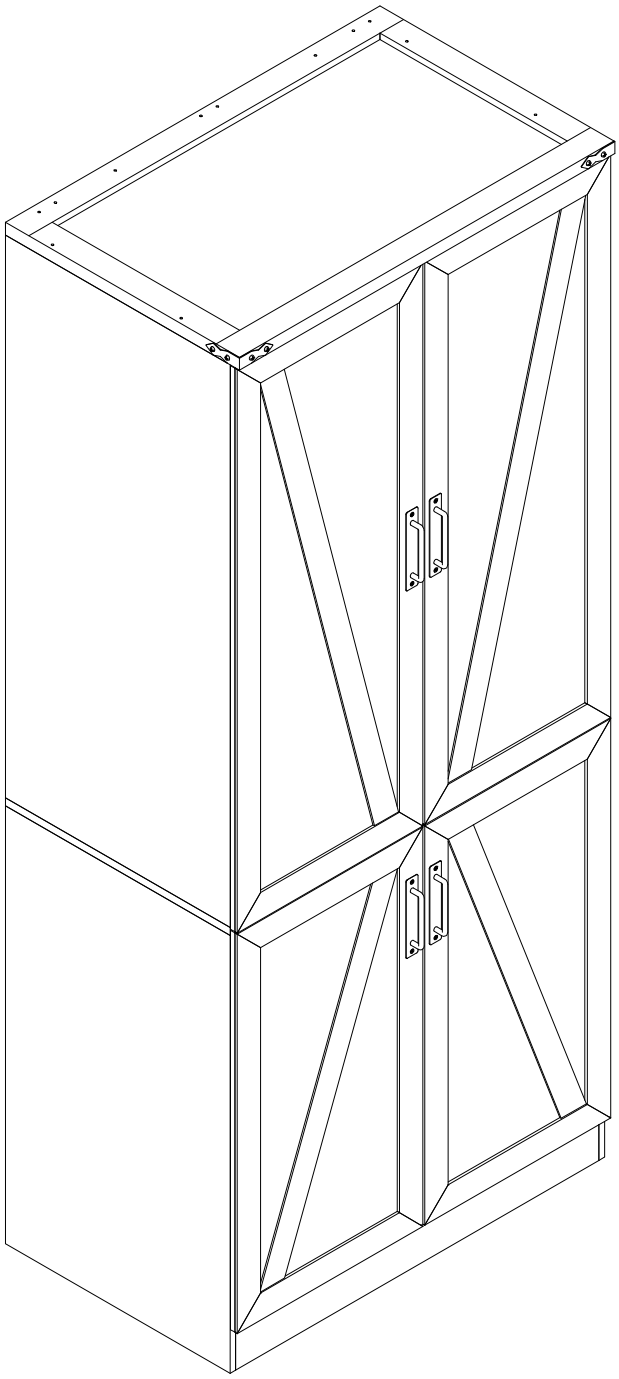

"SAFETY TIPS:

Static charge may cause dust on foam – clean with a dry or damp cloth.
Small foam strands may be present – handle gently and dispose of properly.
Do not burn or incinerate. Check local recycling guidelines.

Installation Video QR

DJ0679
https://vimeo.com/1096220202

Version No.:DJ0679_V01

If you encounter any problems during installation, Please contact our customer service.

Important reminder:

⚠Please sort and check all accessories before assembly.

⚠Please place the product on empty cardboard box or carpet to avoid scratches on it.

⚠Please use proper tools for assembly.Using an electric screw driver can accelerate the assembly speed, but please do not over tighten the screws.

⚠Please follow the assembly steps and do not skip any of them.

⚠If possible, please find a partner to help you with assembly, which can accelerate assembly.

⚠Keep all small parts of this product away from children. They may cause serious injury.

⚠We hope you can retighten the screws 2 weeks after assembly, and check the tightening procedure of the screws every 3 months.

If you meet any difficulty, our friendly customer team are always ready to help you.

Tools list you need prepare

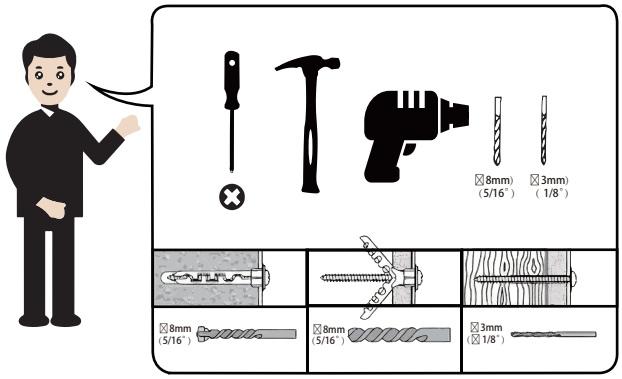



Warning:Overturning the product can cause serious crushing injuries.We have a wall anti-tip device attached,please use it to hold the furniture following assembly instructions.

Do not change the structure of this product in any way.

Our products have been tested and meet all sales specific security measures.

We won't be responsible for any modifications,which may cause significant security risks.

Explosion Diagram

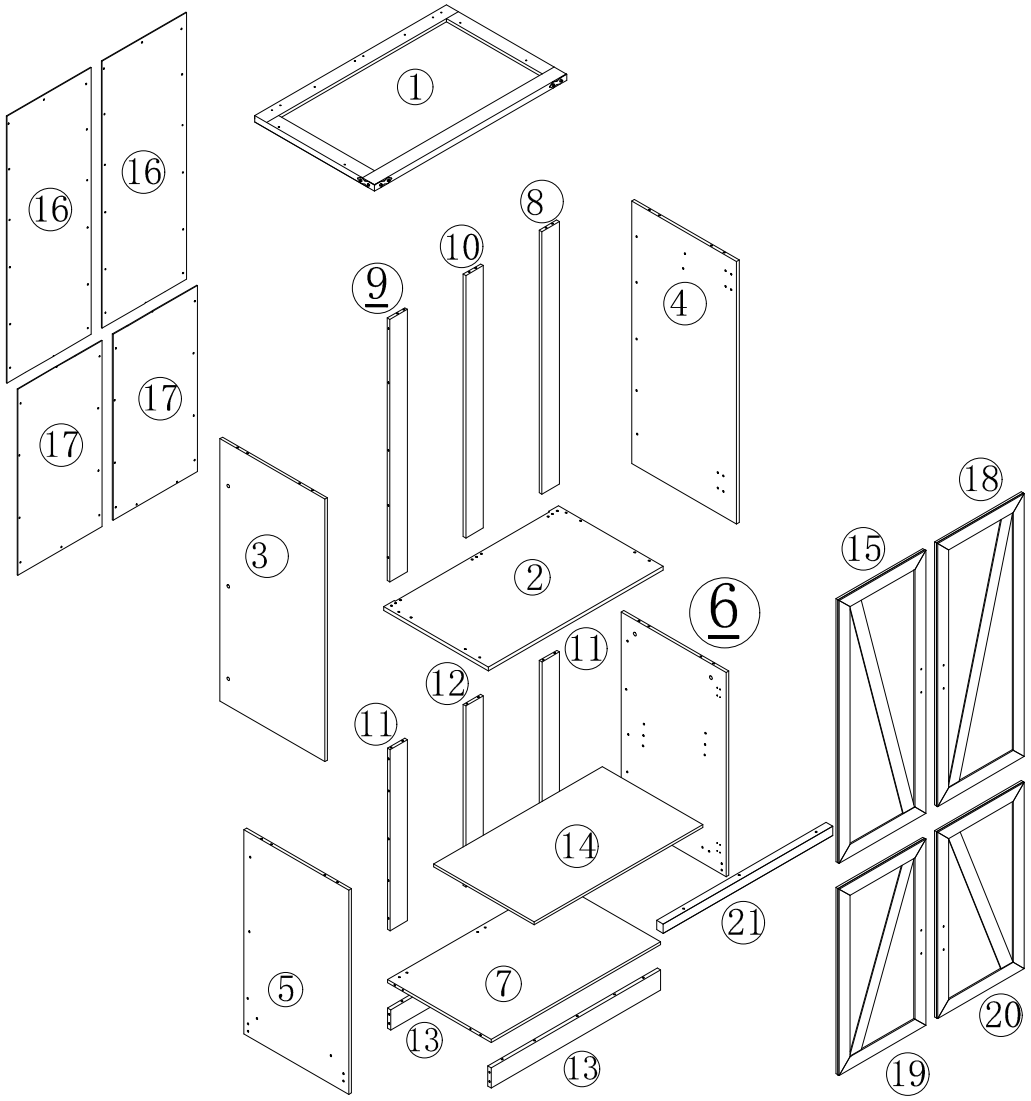

If you encounter any problems during installation,please contact our customer service.

Parts and Operation Elements

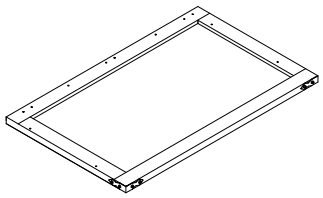	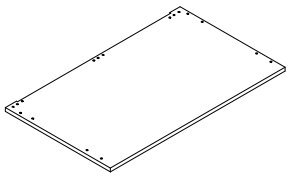	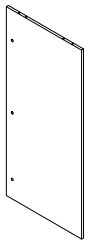	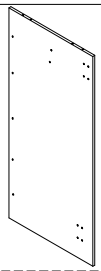
① 1Pc	② 1Pc	③ 1Pc	④ 1Pc
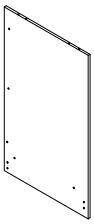	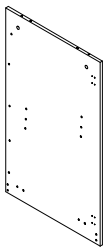	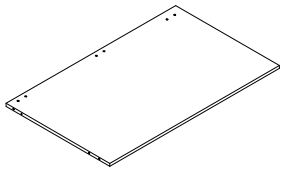	
⑤ 1Pc	⑥ 1Pc	⑦ 1Pc	⑧ 1Pc
			
⑨ 1Pc	⑩ 1Pc	⑪ 2Pcs	⑫ 1Pc
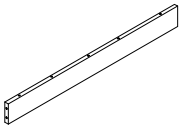	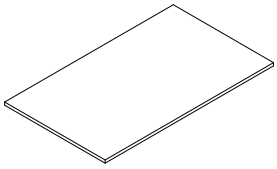	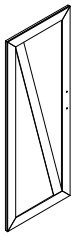	
⑬ 2Pcs	⑭ 1Pc	⑮ 1Pc	⑯ 2Pcs
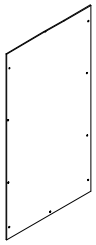	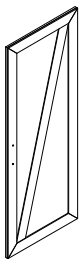	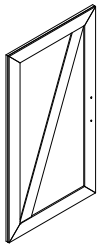	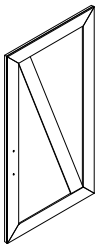
⑰ 2Pcs	⑱ 1Pc	⑲ 1Pc	⑳ 1Pc
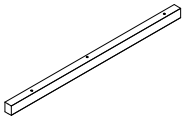			
㉑ 1Pc			

If you encounter any problems during installation,please contact our customer service.

HardWare

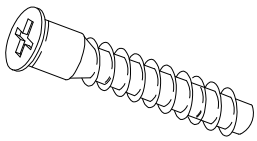 M5*38mm Screw	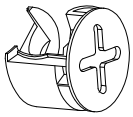 Cam Lock ϕ15*9.5	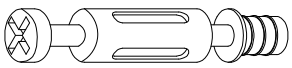 Cam Bolt	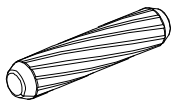 Dowel ϕ6*30
A 45PCS +2PCS	B 24PCS +2PCS	C 24PCS +2PCS	D 36PCS +2PCS
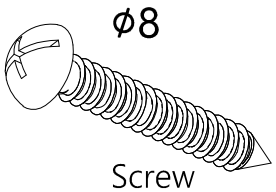 ϕ8 Screw M4*40	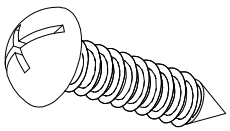 ϕ8 Screw M4*15	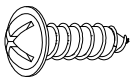 ϕ8 Screw M3.5*12	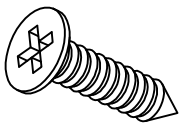 ϕ7 Screw M3.5*12
E 2PCS	F 2PCS	G 48PCS +2PCS	H 52PCS +2PCS
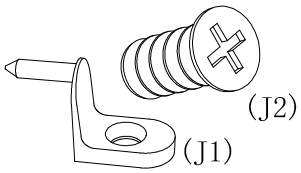 (J2) (J1)	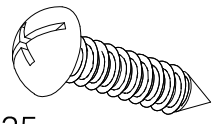 ϕ7 Screw M3.5*25	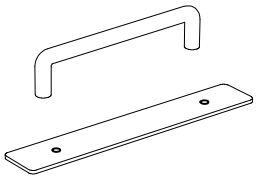	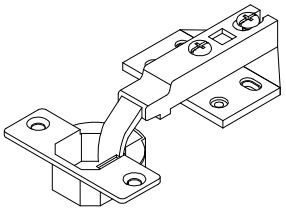
J 4PCS +2PCS	K 3PCS	L 4PCS	M 8PCS
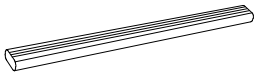 L=764mm	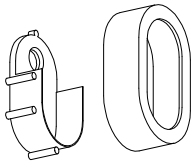 (P1) (P2)	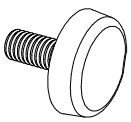 M6*ϕ15	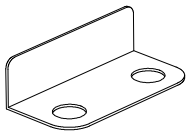 27*13mm
N 1PC	P 2PCS	Q 4PCS	R 1PC
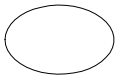	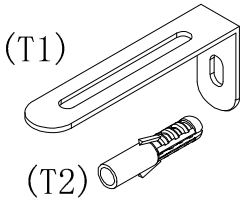 (T1) (T2)	Sense Light 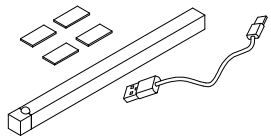 L=500mm	ϕ8  Screw M3.5*12
S 48PCS +2PCS	T 2PCS	U 1PC	Z 2PCS +2PCS
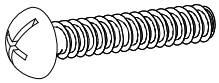 Screw M4*22	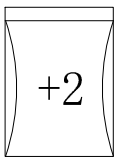 +2 SPARE BAG		
Y 8PCS +2PCS	Please put the hardware of +2 in this self sealing bag		

! Tips: The number after "+" represents the spare hardware.

If you encounter any problems during installation, please contact our customer service.

1

Firstly,please take out all the boards from the packaging box and arrange them in order for easy access to the boards .then take out all the hardware from the hardware package and arrange them in alphabetical order.Follow the instructions for each step to determine how many accessories are needed and how much to take

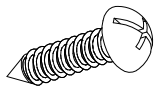

Fx2

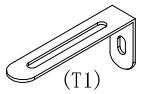

Tx2

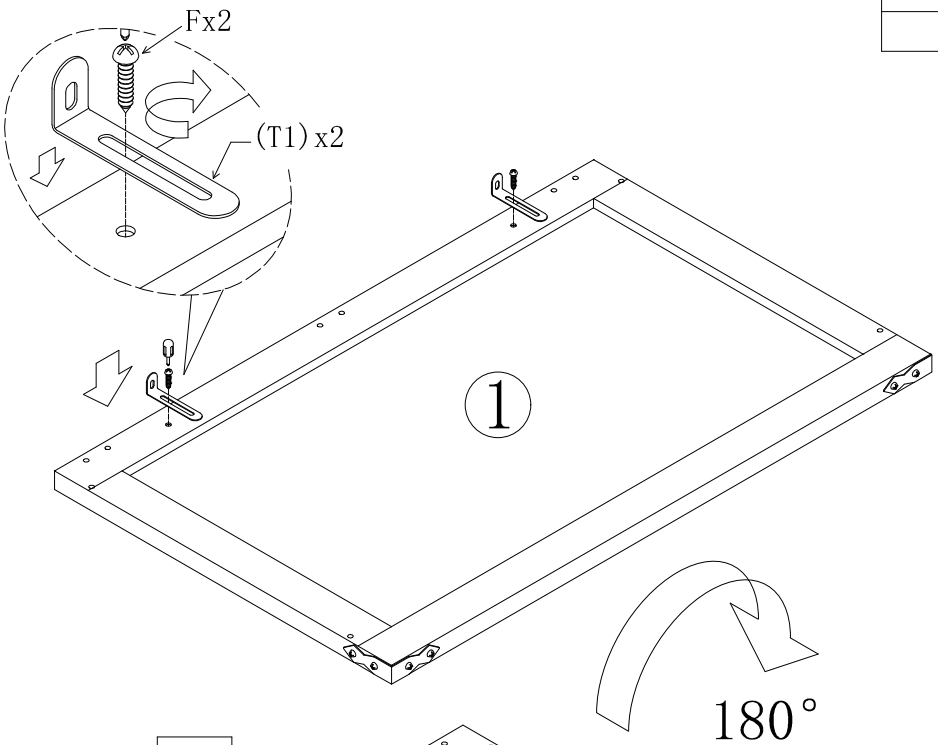

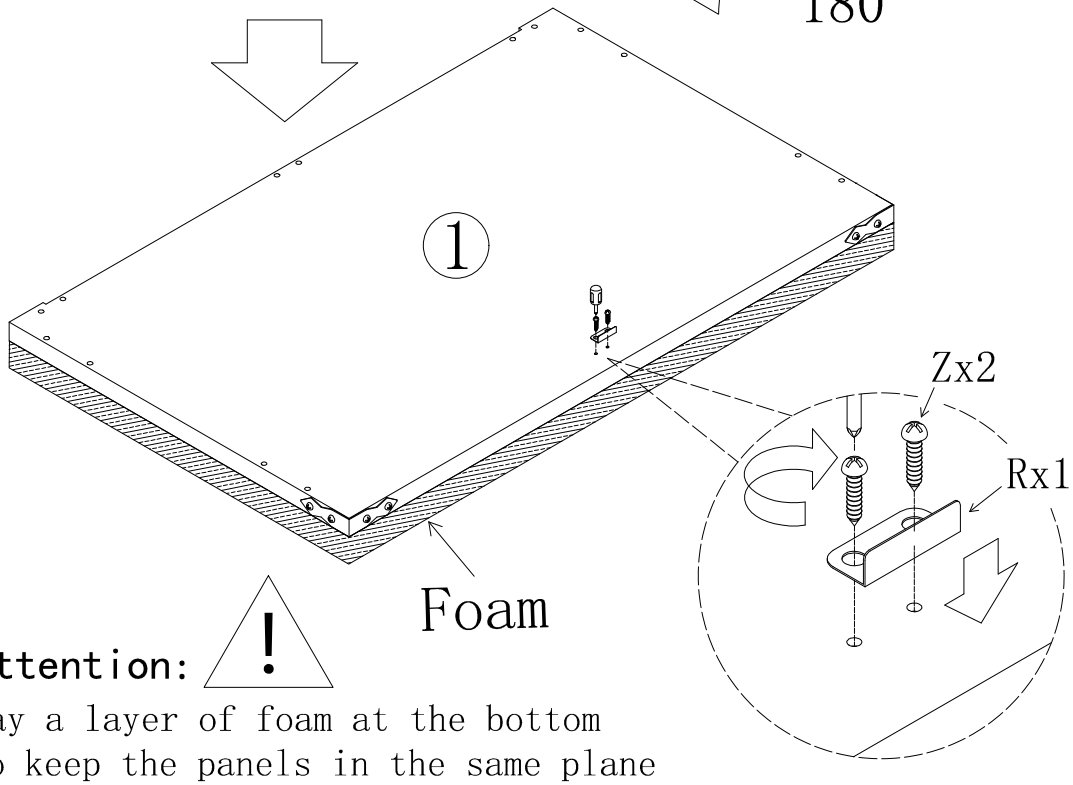

Attention:

Lay a layer of foam at the bottom
to keep the panels in the same plane

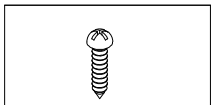

Zx2

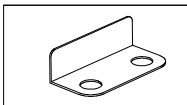

Rx1

2

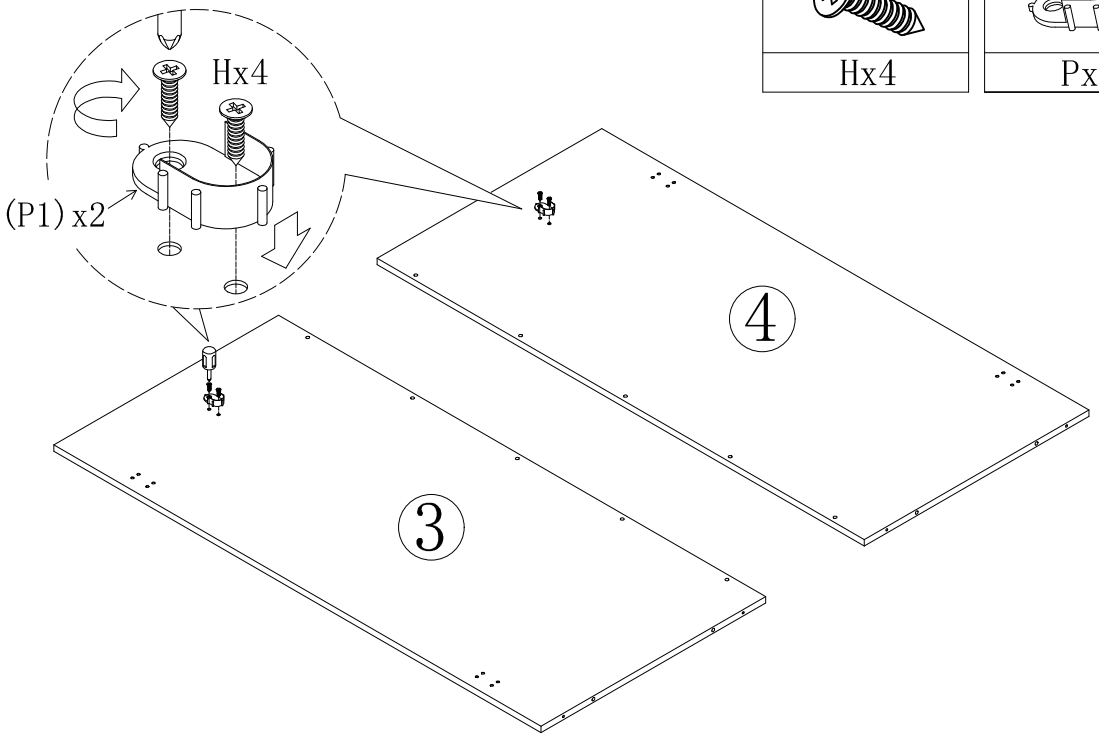

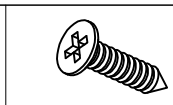

Hx4

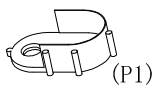

Px2

3 Install accessory D first before assembling

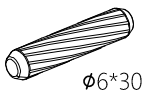

Dx2

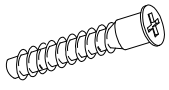

Ax3

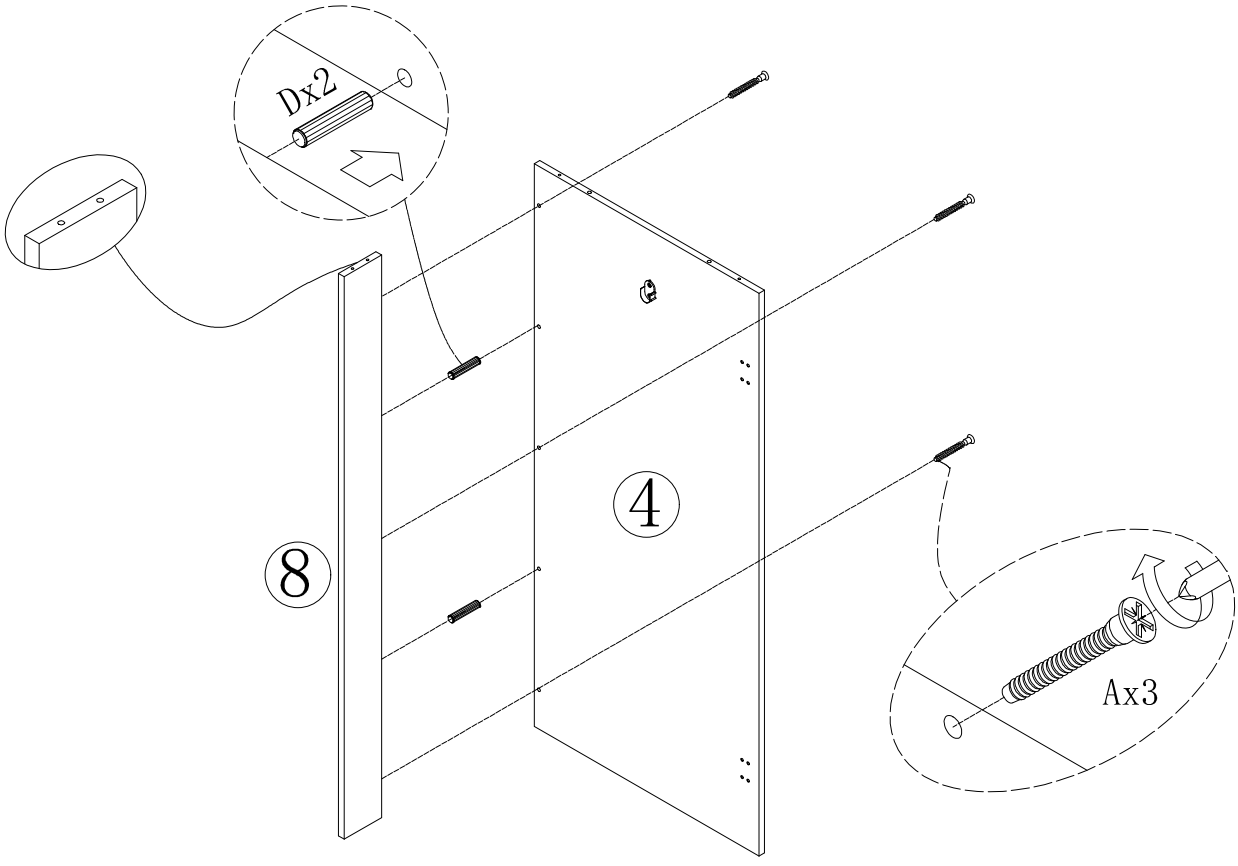

4 Install accessory D first before assembling

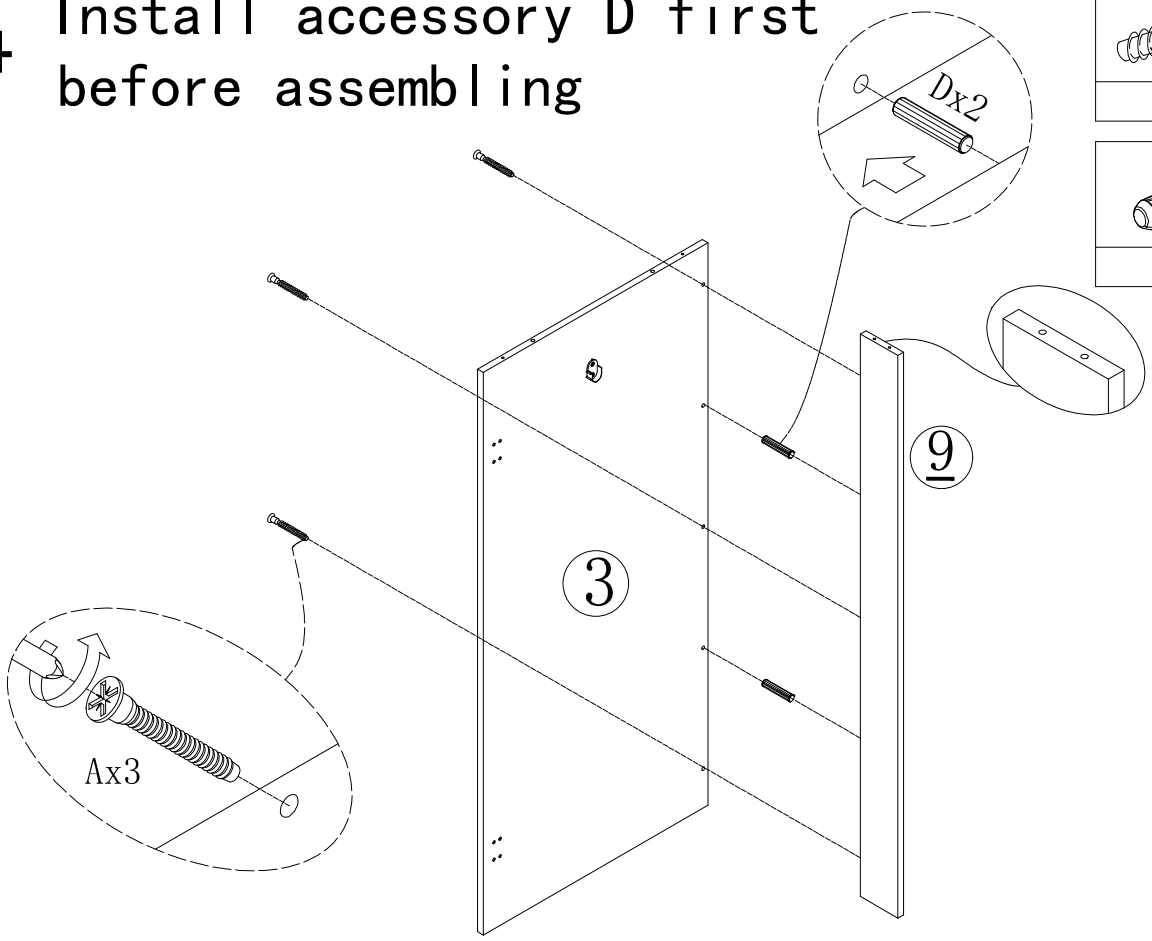

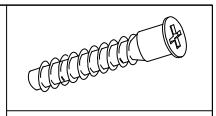
Ax3

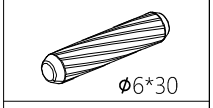

Dx2

5 Install accessory D first before assembling

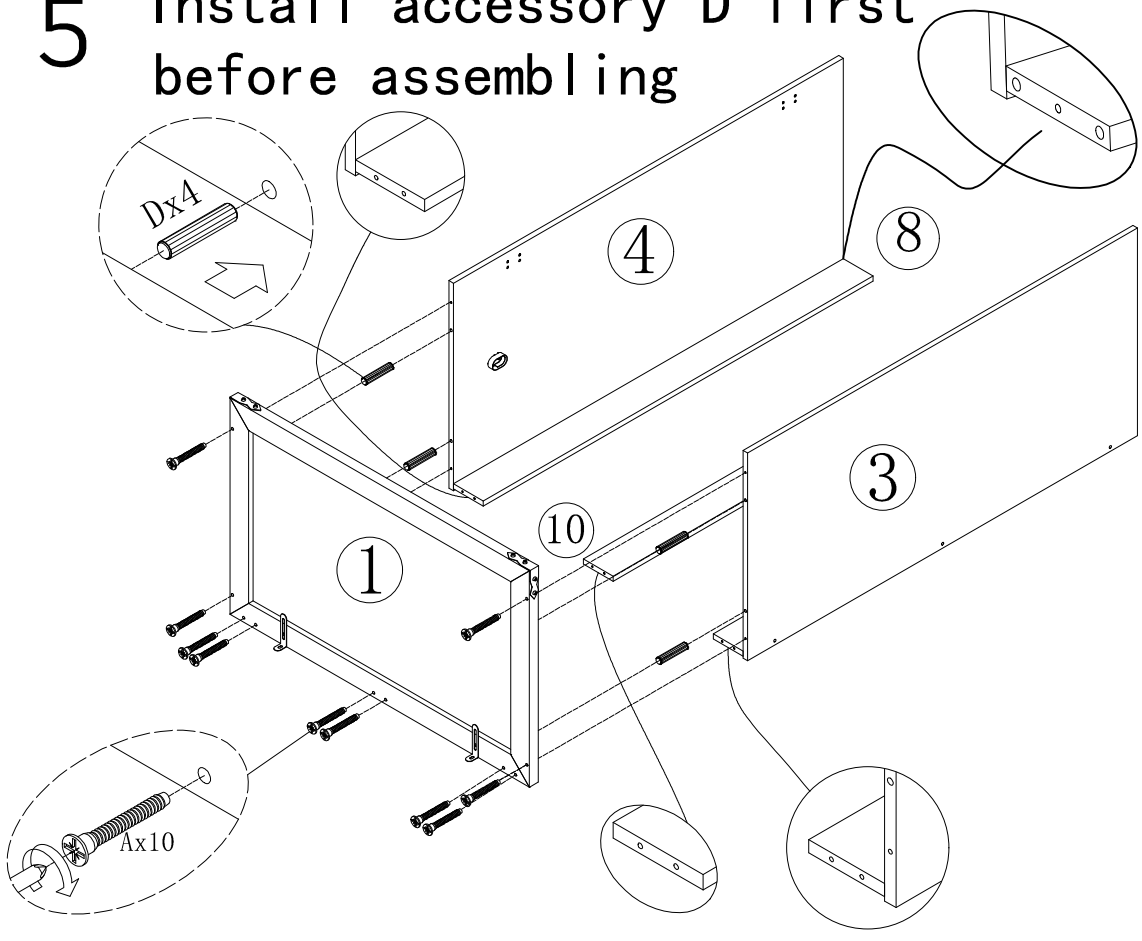

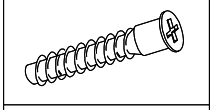
Ax10

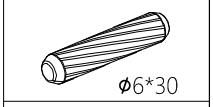

Dx4

If you encounter any problems during installation,please contact our customer service.

6 Install accessory D first before assembling

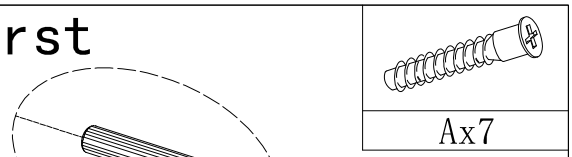

Ax7

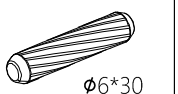

Dx10

7

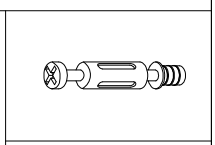

Cx10

Waiting for the next step

If you encounter any problems during installation,please contact our customer service.

8

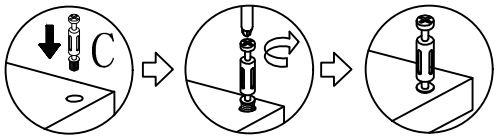



Bx6

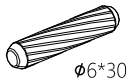

Dx4



Cx6

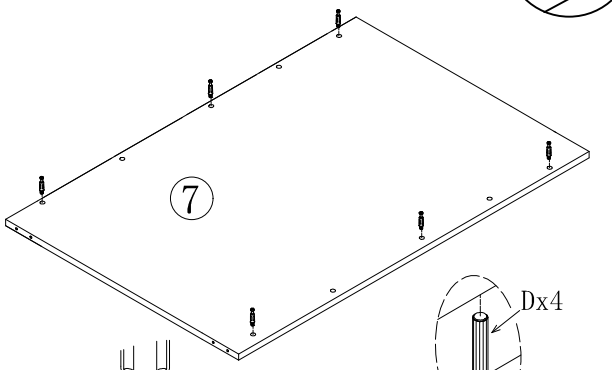

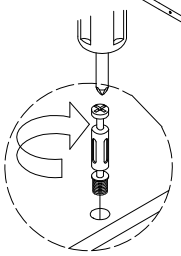

Cx6

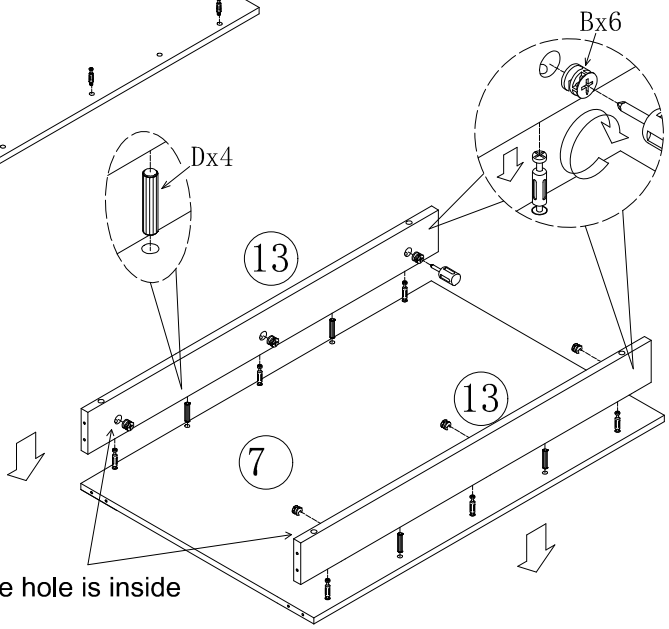

The hole is inside

Attention:



Lay a layer of foam at the bottom
to keep the panels in the same plane

9

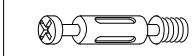

Cx6

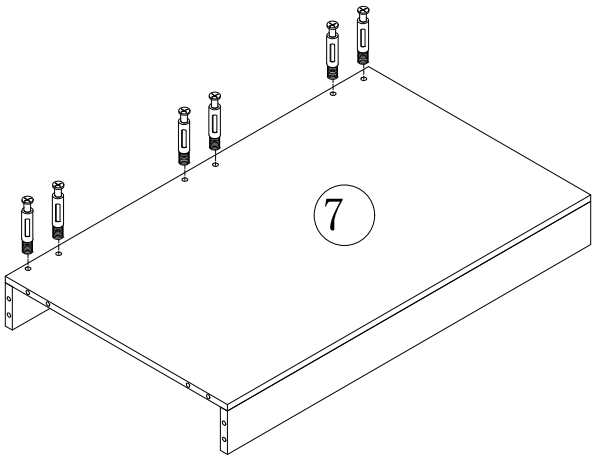

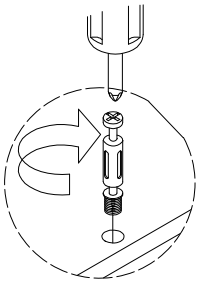

Cx6

10

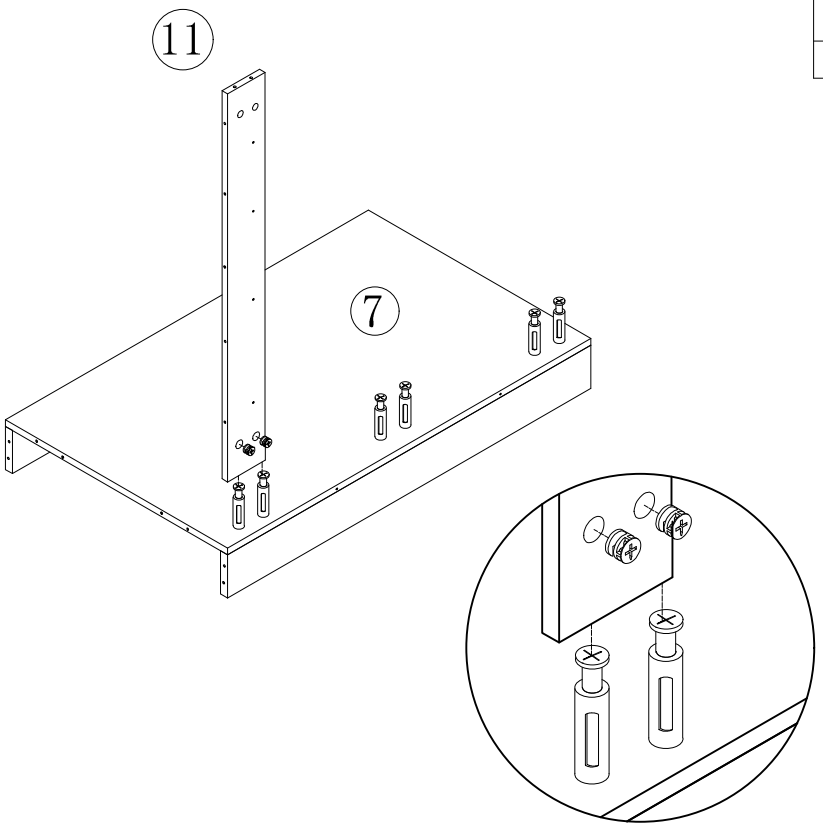

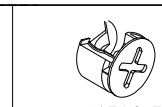

ϕ15*9.5

Bx2

11

Install accessory D first before assembling

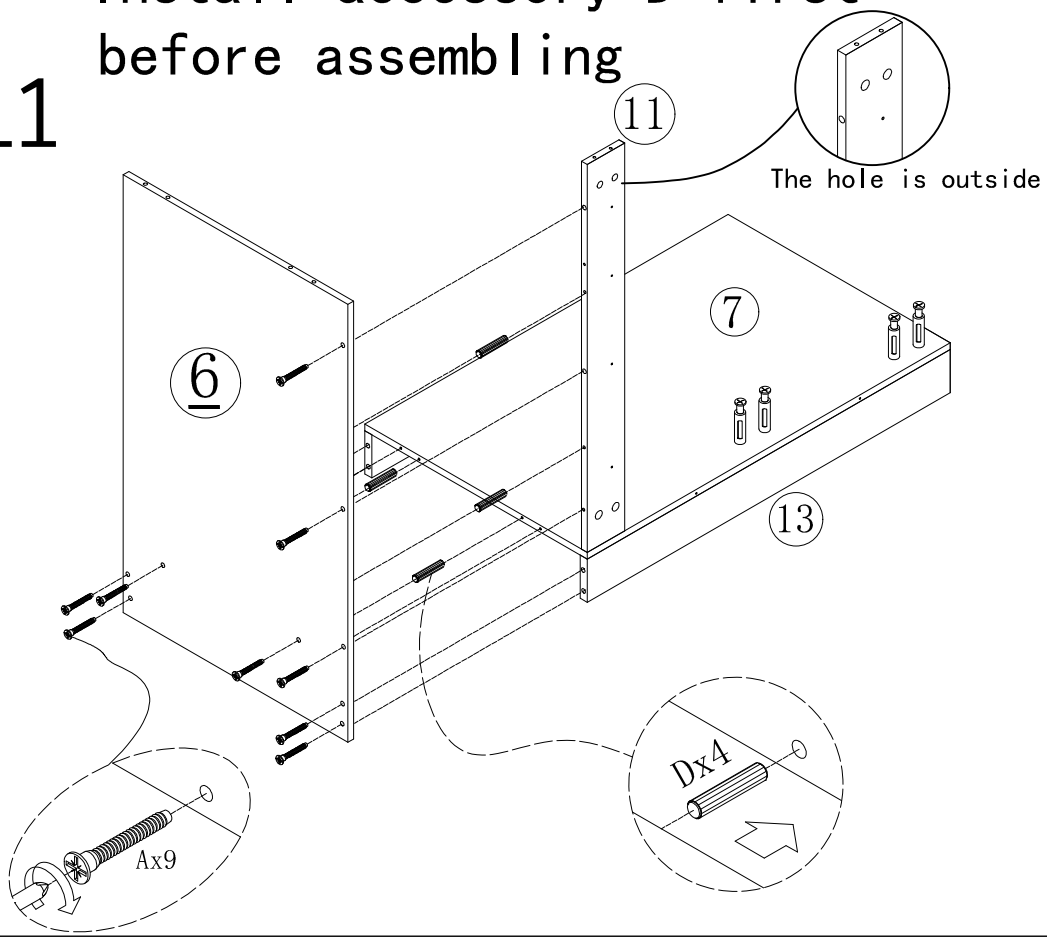

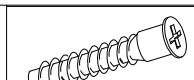

Ax9

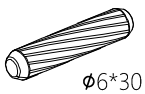

ϕ6*30

Dx4

12

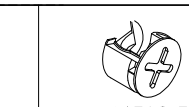

Bx2

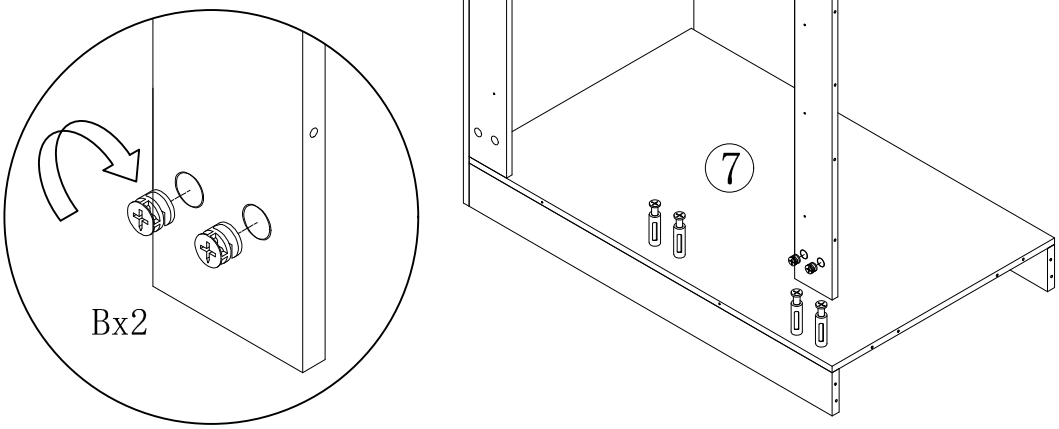

13

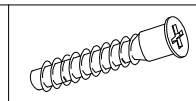

Ax9

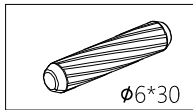

Dx4

14

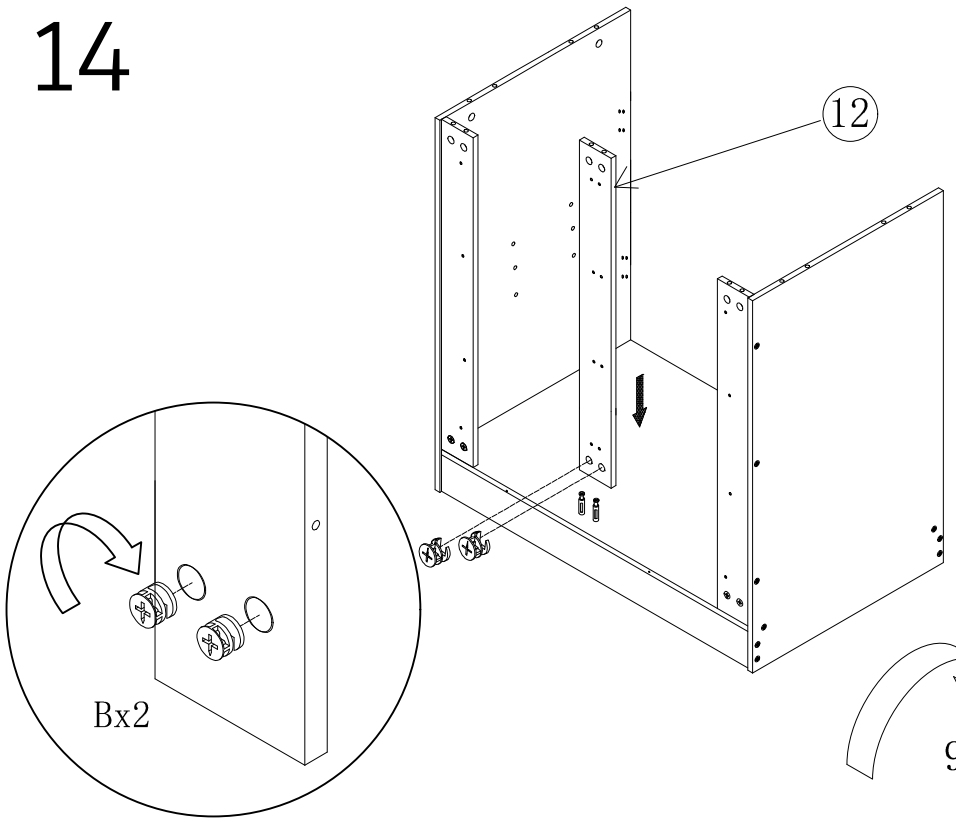

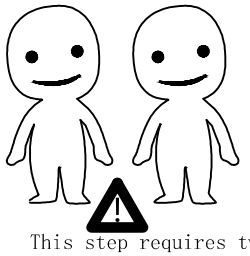

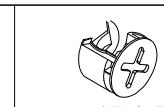

Bx2

15

Use your hands to support panel 12 to prevent it from falling down and damaging the panel

There are 10 Ⓑ accessories available

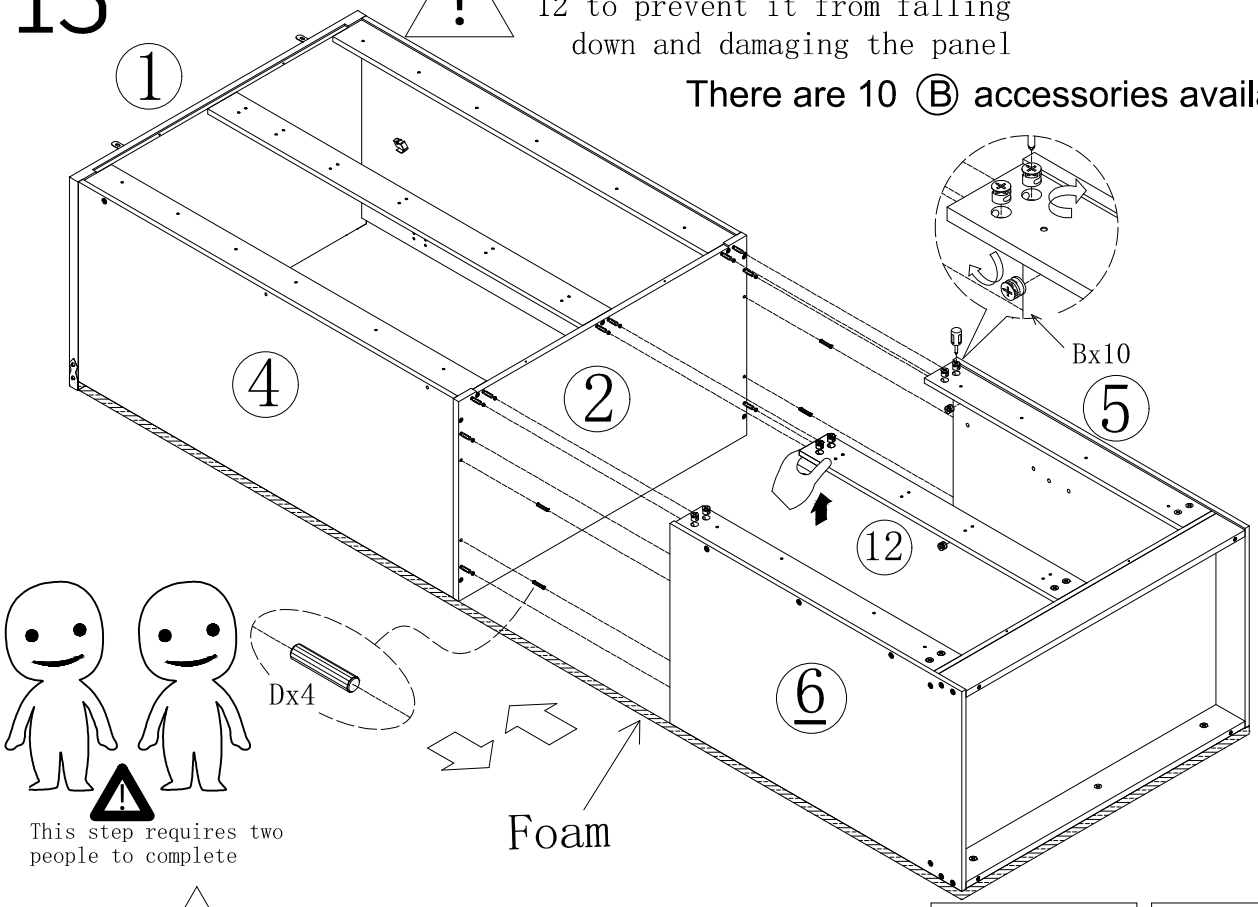

Attention:

Lay a layer of foam at the bottom to keep the panels in the same plane



Bx10

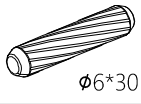

Dx4

If you encounter any problems during installation,please contact our customer service.

16

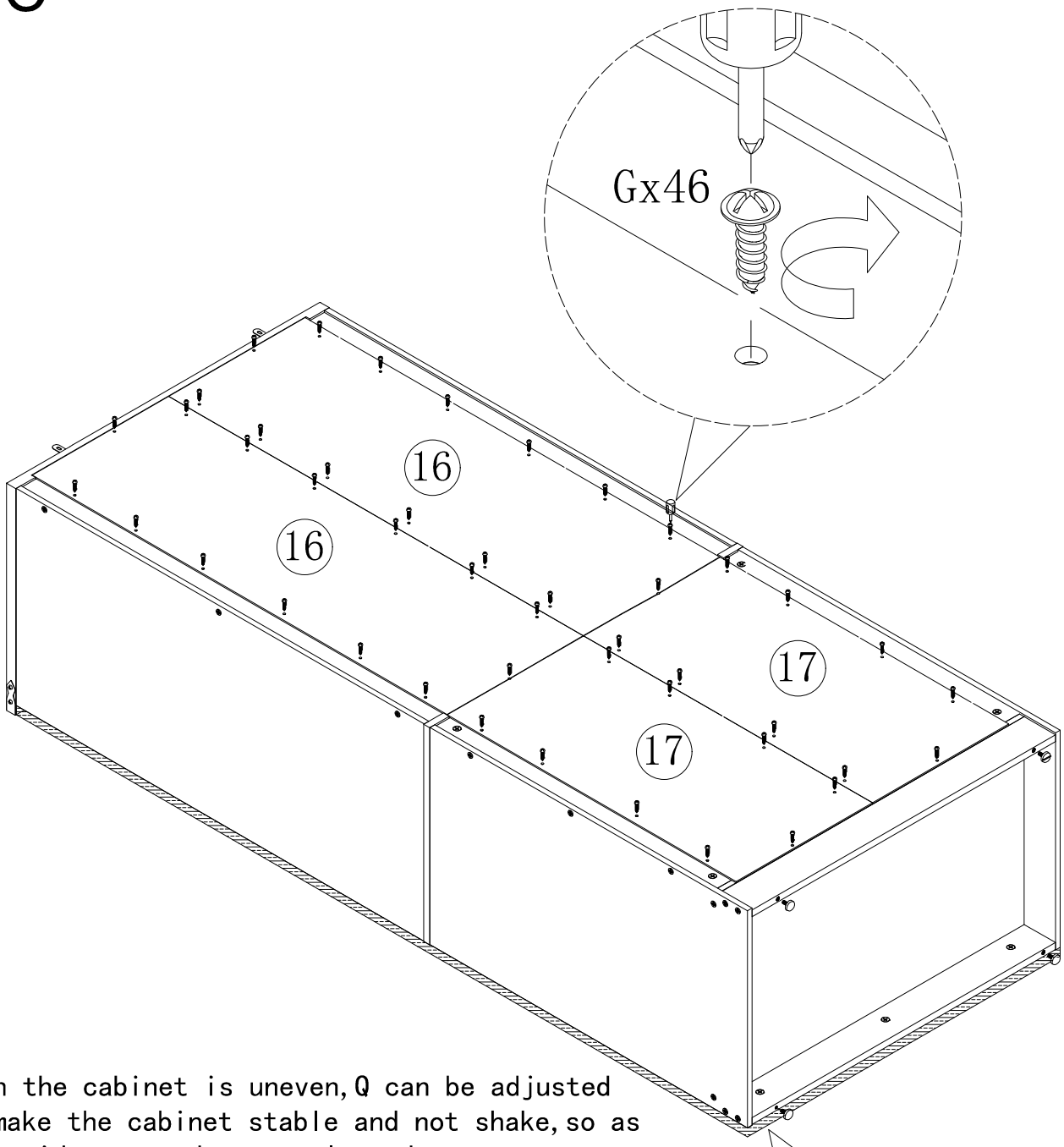

When the cabinet is uneven,Q can be adjusted to make the cabinet stable and not shake,so as to avoid uneven door panels and gaps.

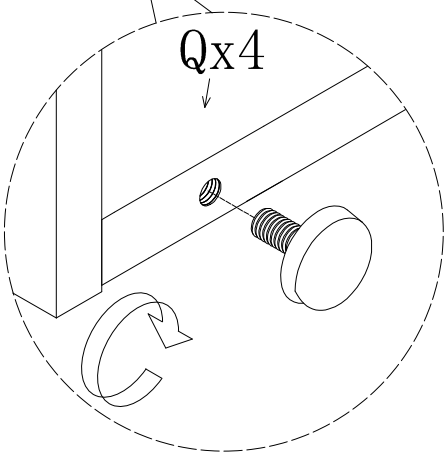

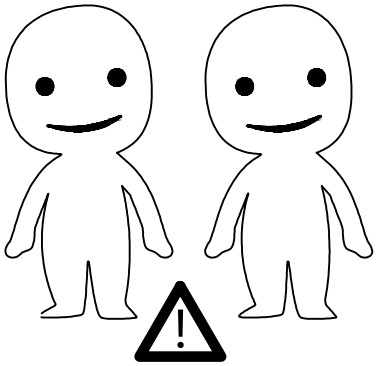

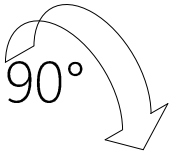

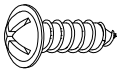

Gx46



Qx4

This step requires two people to complete

17

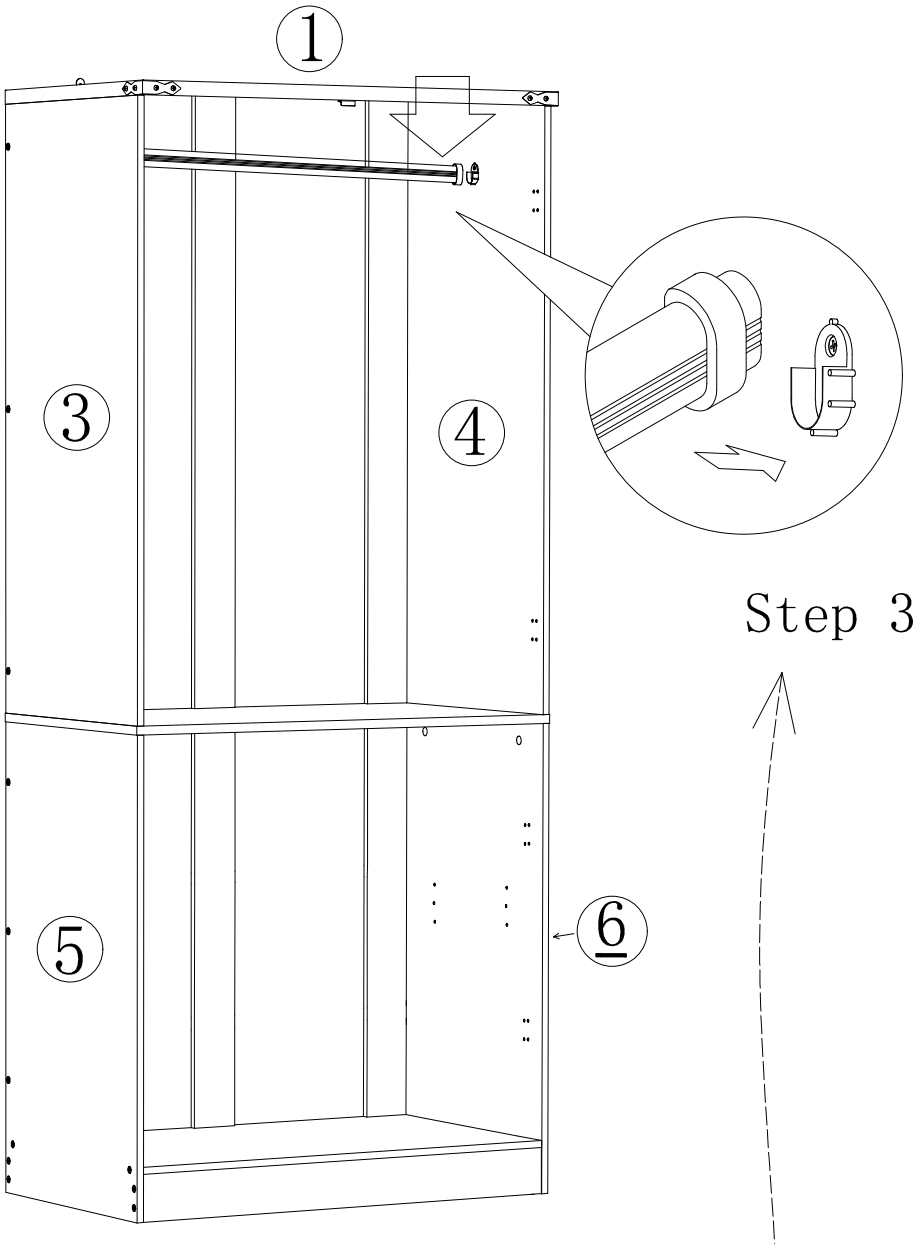

Step 3

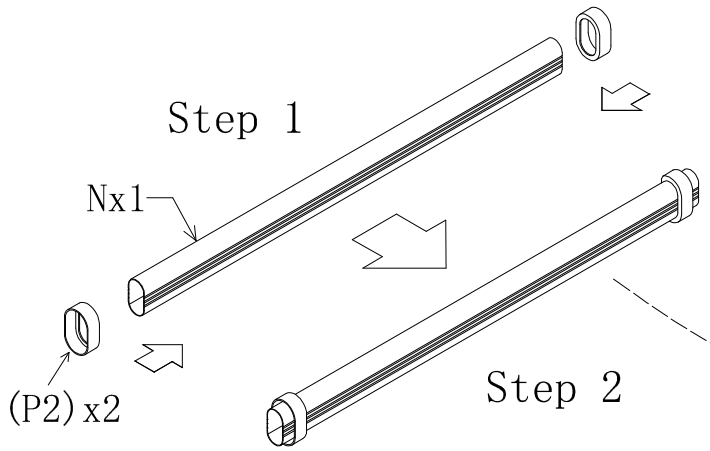

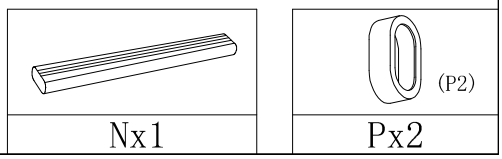

If you encounter any problems during installation,please contact our customer service.

18

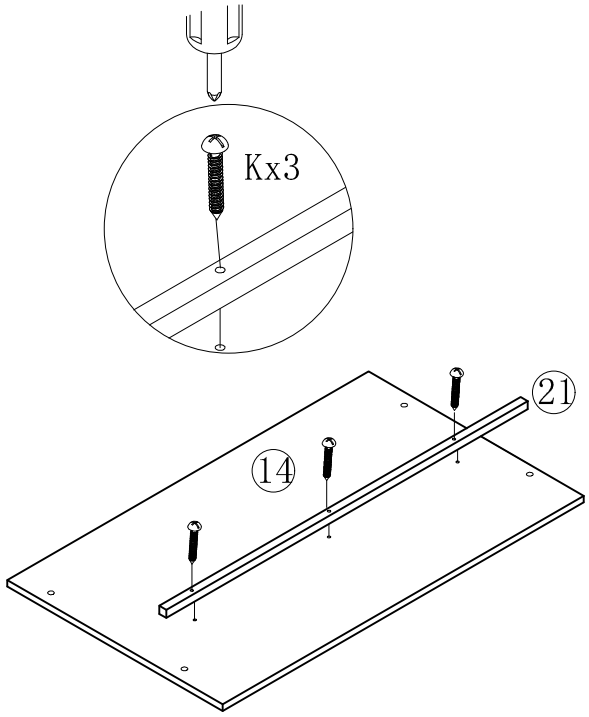

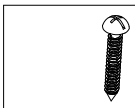

Kx3

19

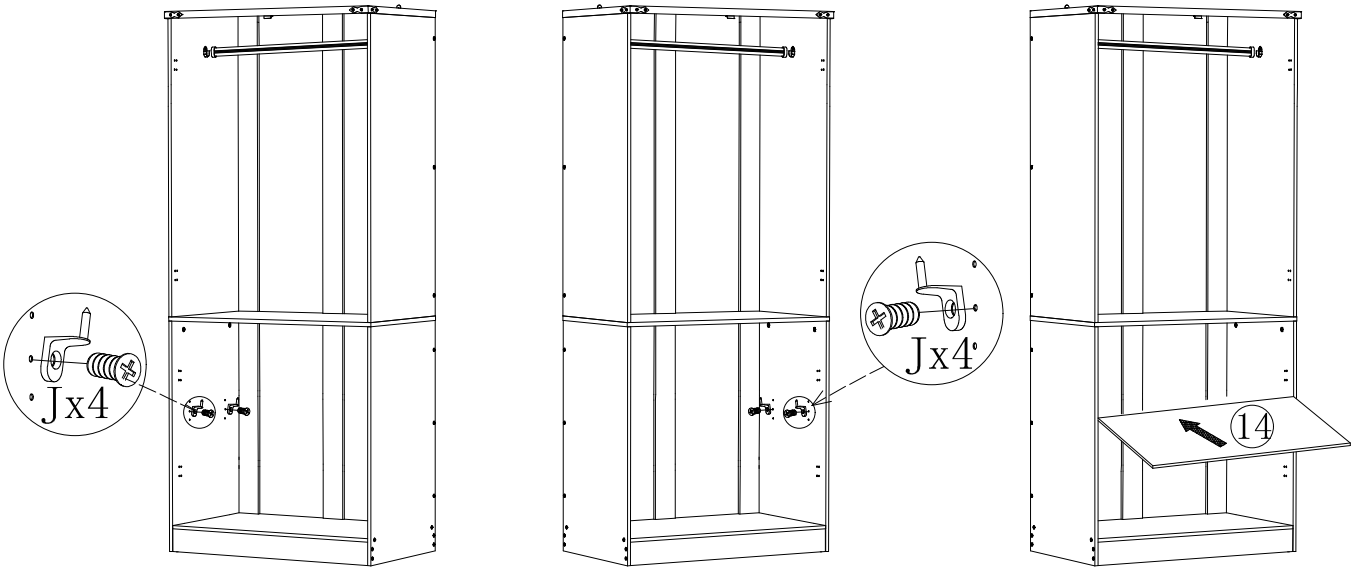

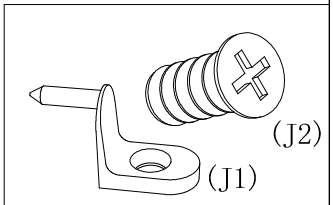

J	4PCS

If you encounter any problems during installation,please contact our customer service.

20

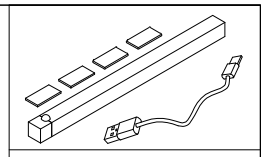

Ux1

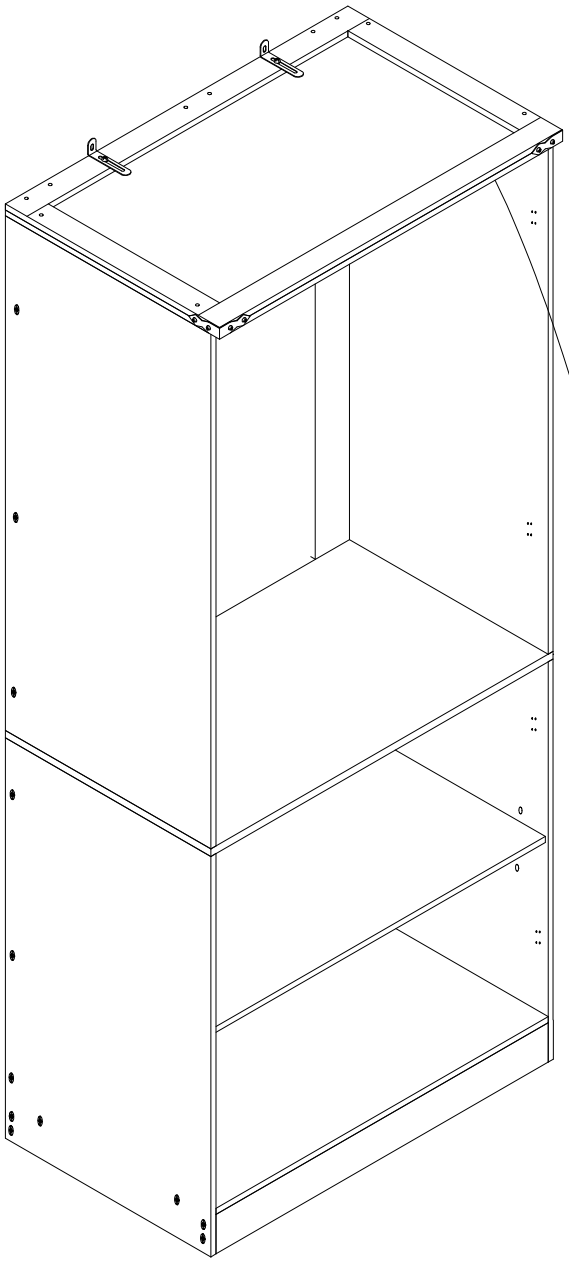

View of bottom

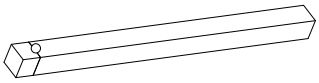

Setp 1

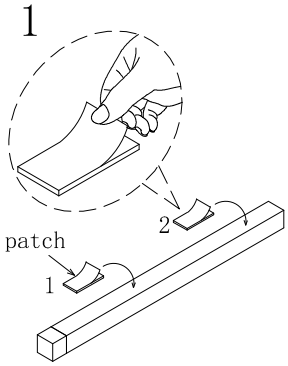

Setp 2

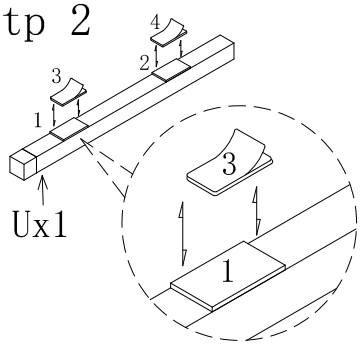

Setp 3

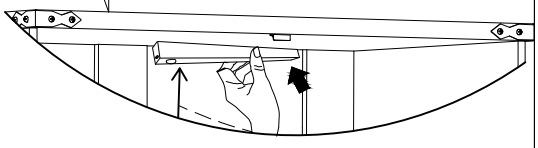

Please tear off the double-sides plastic film

22 Concealed hinges are three-way adjustable

Mainly used to adjust the upper,lower,
left,and right door gaps

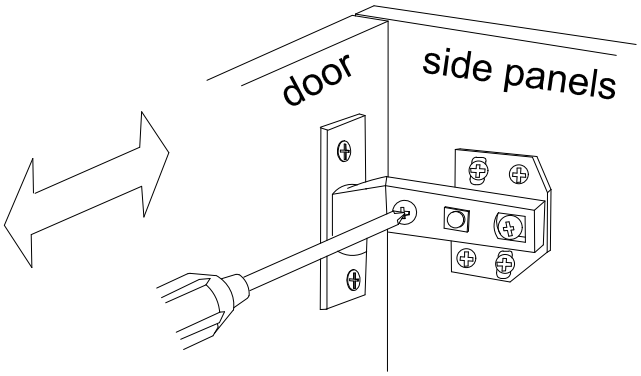

Horizontal

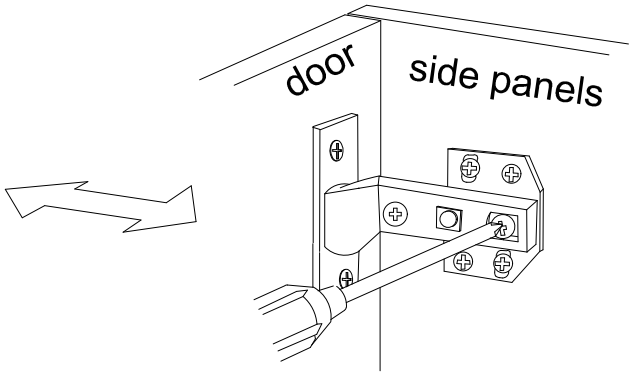

In-and-out

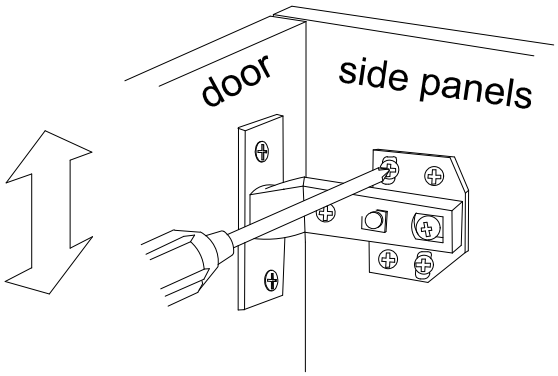

Vertical

23

Hx16	Mx8

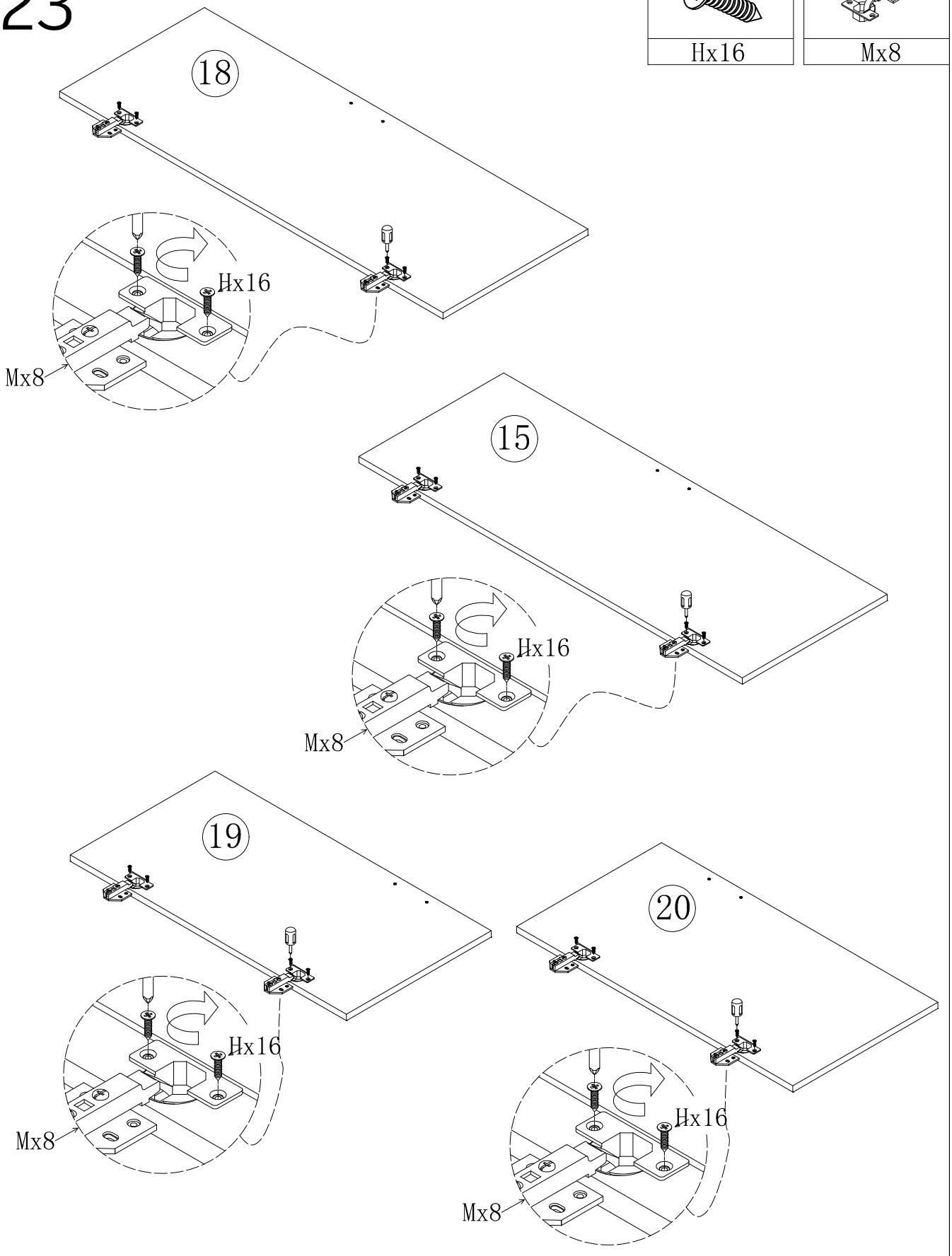

If you encounter any problems during installation,please contact our customer service.

24

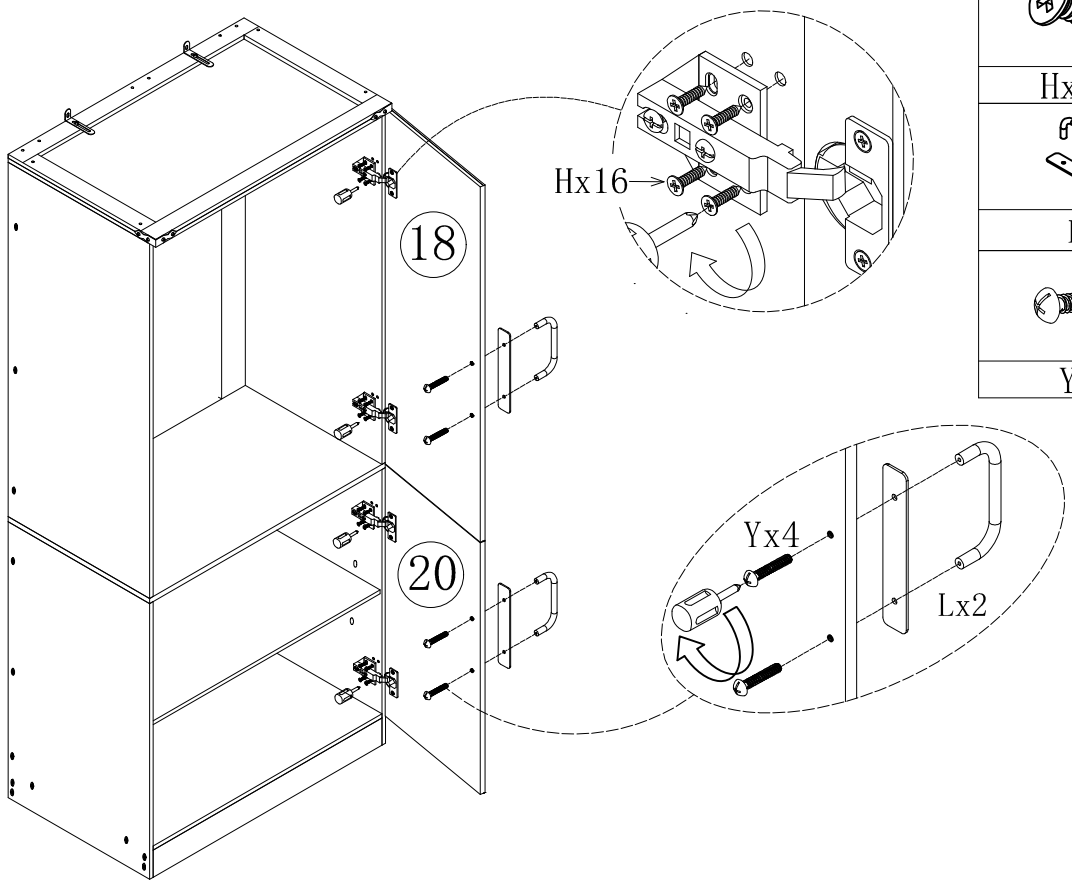

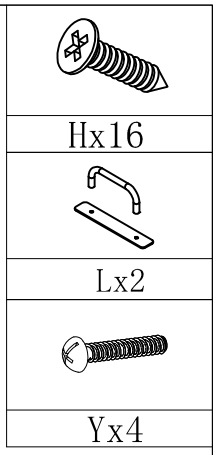

25

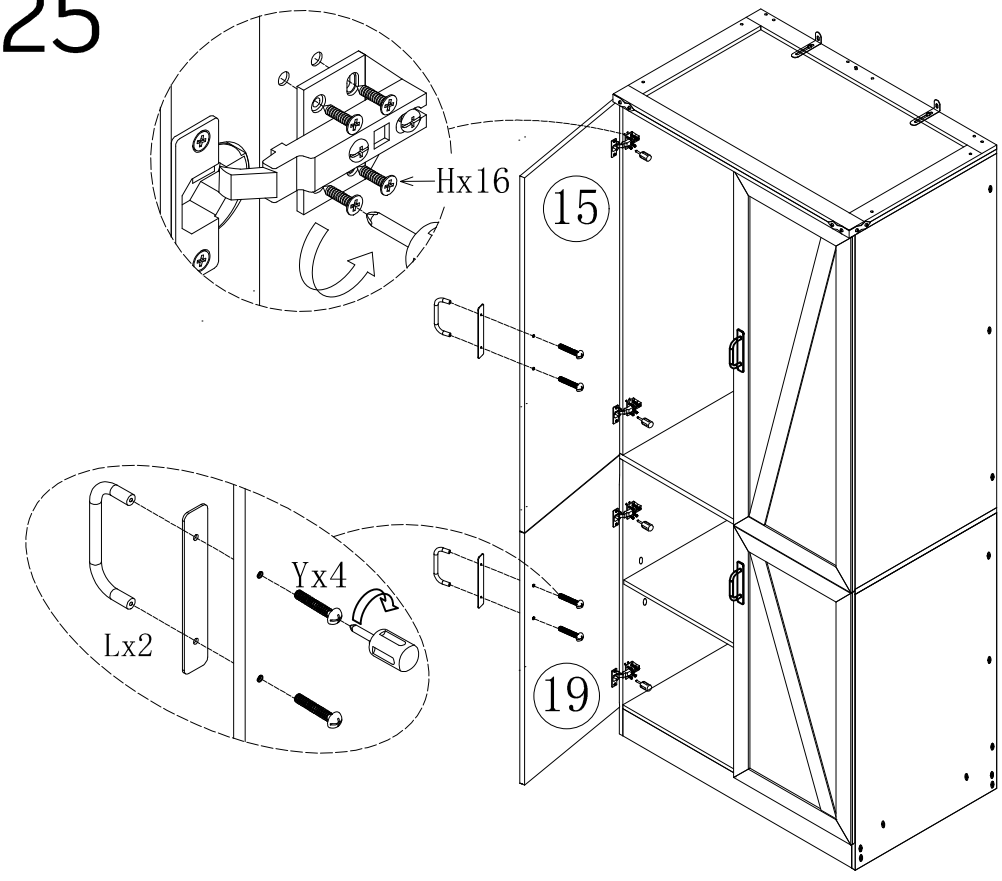

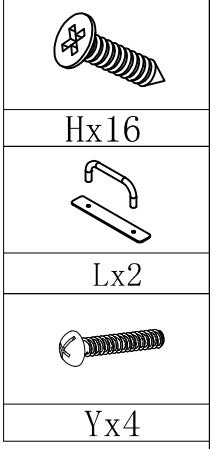

If you encounter any problems during installation,please contact our customer service.

26

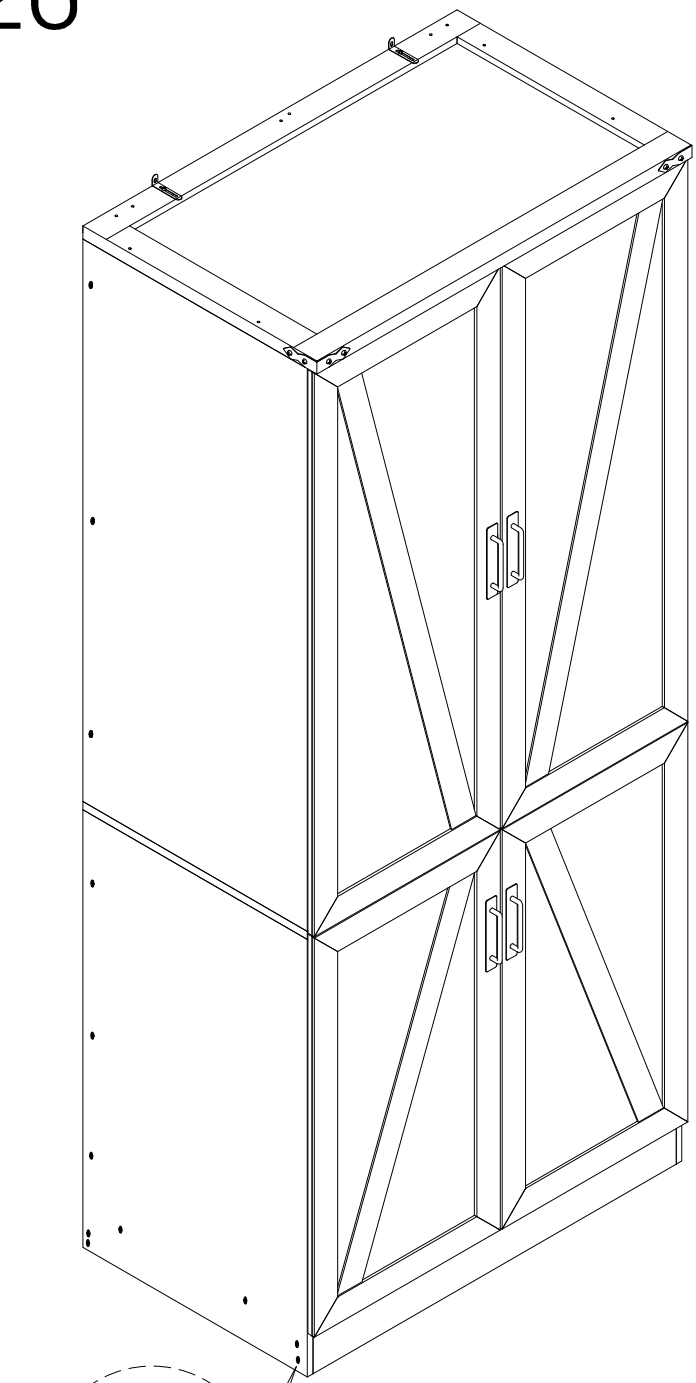

When the cabinet is uneven,
Q can be adjusted to make
the cabinet stable and
not shake,so as to avoid
uneven door panels and gaps.

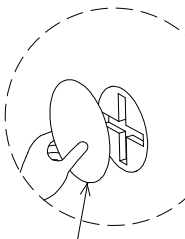

Sx48

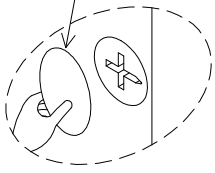

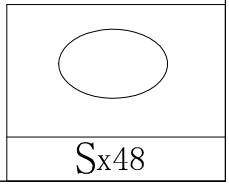

Sx48

If you encounter any problems during installation,please contact our customer service.

27

Attention: For safety and stability, we suggest you have to secure the anti-tip accessories to the wall to

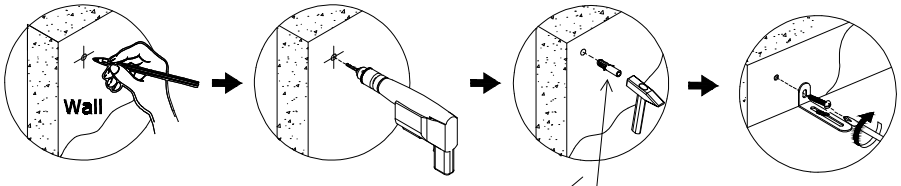

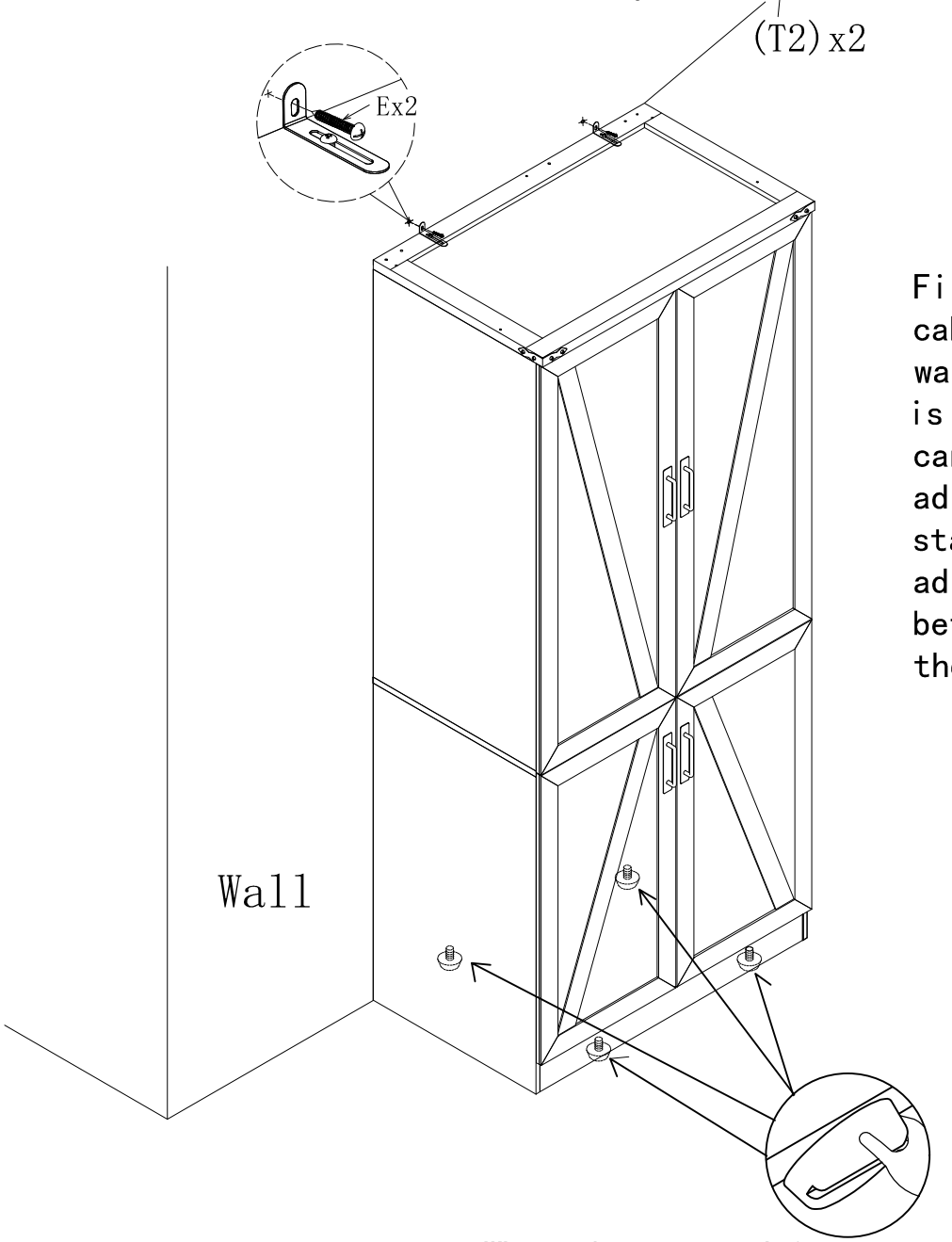

First,Place the cabinet against the wall.If the cabinet is not stable,you can use Q adjustment to stabilize it.Then adjust the door gap before fixing it to the wall

When the ground is uneven, adjust the four adjustment feet

Attention:

Warning: If you overturn the furniture, it may cause serious or fatal crushing injuries. We have a wall connection device attached, please use it to hold the furniture following these instructions.

1. Mark the corresponding hole positions where you want to place the furniture;
2. Use a impact drill to drill holes and pay attention to avoid wires and water pipes;
3. Knock the expansion pipes into the wall holes;
4. Place the furniture in the corresponding position and tighten the wall

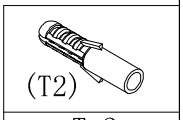

Tx2

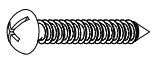

Ex2

If you encounter any problems during installation,please contact our customer service.