# PARIS MIRROR

**PRODUCT SPECIFICATIONS**
MAIABLK05

# MAIA Towel Warmer in Black 20 X 27







## DESCRIPTION

Designed with a compact horizontal silhouette and refined clean lines, Maia adds a modern spa-inspired touch while keeping your towels warm, dry, and ready to use.

## FEATURES & BENEFITS

- Comes with color matched metal brackets
- Surface Temp: Between 100° F - 160° F
- Made from stainless steel
- Engineered for Splash Protection
- Integrated Wiring
- Heats up in 5 Minutes

## AVAILABLE TOWEL WARMER OPTIONS

- Range of designer finishes

## SPECIFICATIONS

- **Dimensions:** 19.7" x 26.6" x 4.7"
- **Ingress Protection Rating:** IP44
- **Power Requirement:** 99 W

## SAFETY SPECIFICATIONS

- Entire assembly meets UL/cUL standards
- International Certifications
- Conforms to CSA standards
- ETL tested and compliant
- Hardwired connection (120 VAC)
- Heat Output: 338 BTUs
- Amperage: 0.825 A
- Resistance: 160
- Conforms to CSA standards

**Website:** parismirror.com
**Phone Number:** 1-855-444-9333
**Email:** info@parismirror.com

**PARIS MIRROR USA**
1395 Brickwell Avenue, Suite 800
Miami, FL, 33131

**PARIS MIRROR CANADA**
1625 Chabanel O, Suite 201
Montreal, Qc, H4N 2S7

# PARIS MIRROR

**PRODUCT SPECIFICATIONS**
MAIABLK05

## MAIA Towel Warmer in Black 20 X 27

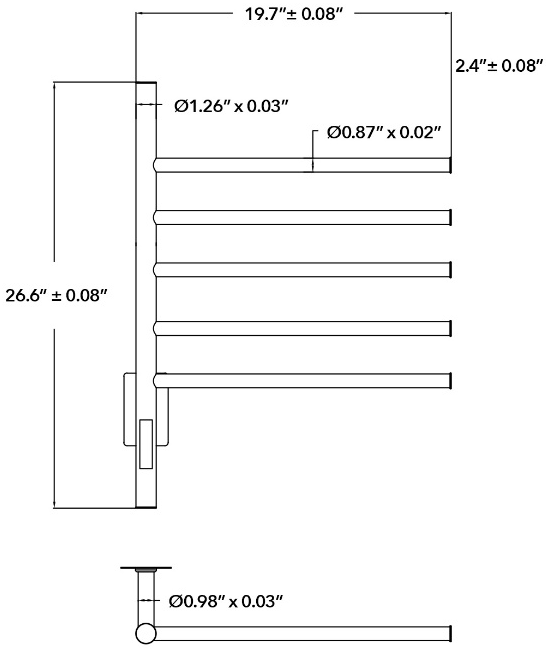


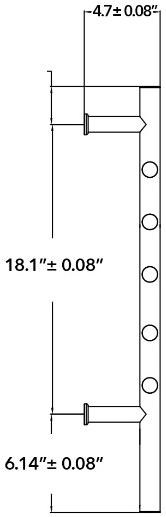


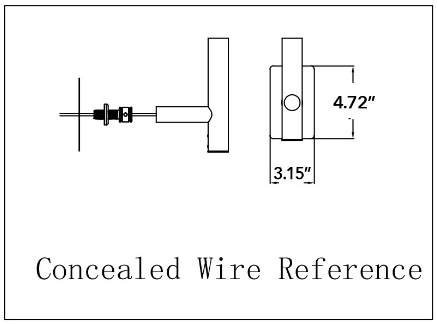


### INSTALLATION

- Decide on wall positional placement.
- Prepare & install wall hooks measured to distance between towel warmer's anchors.
- Match & attach 3 electrical wires from towel warmer to home electrical wires: Live to Live, Ground to Ground, Neutral to Neutral.
- Hang and affix to wall.

### CARE & SAFETY

- Wear suitable eye wear protection when drilling. Use caution when using power tools near water, beware of hidden cables or pipes.
- Be cautious if drilling on tiled surfaces in case the drill slips. Applying a piece of masking tape on the wall before marking out fixing holes can help stopping the drill from moving.

### CLEANING & MAINTENANCE

- It is recommended to clean the unit with a soft, dry, non-abrasive cloth when turned off.
- Do not strike glass components with hard or pointy items.

**Website:** parismirror.com
**Phone Number:** 1-855-444-9333
**Email:** info@parismirror.com

**PARIS MIRROR USA**
1395 Brickwell Avenue, Suite 800
Miami, FL, 33131

**PARIS MIRROR CANADA**
1625 Chabanel O, Suite 201
Montreal, Qc, H4N 2S7