MIRROR DRESSER
ASSEMBLY INSTRUCTIONS

BOX #1

Ⓐ MIRROR: 1PC

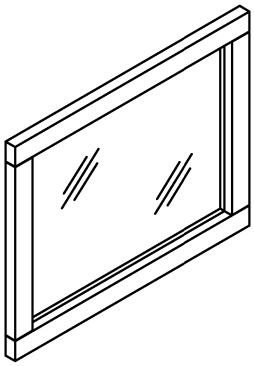

Ⓑ SUPPORT BAR: 2PCS

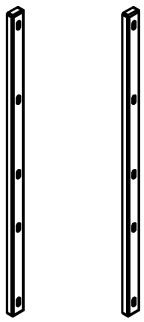

BOX #2

Ⓒ DRESSER: 1PC

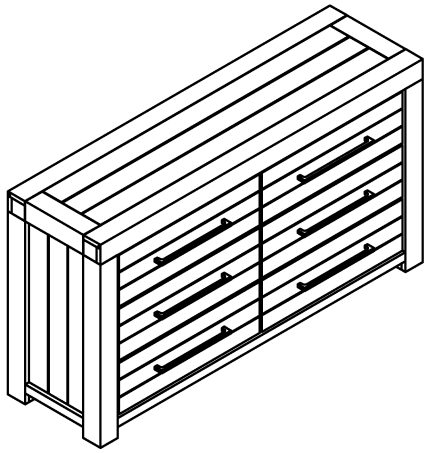

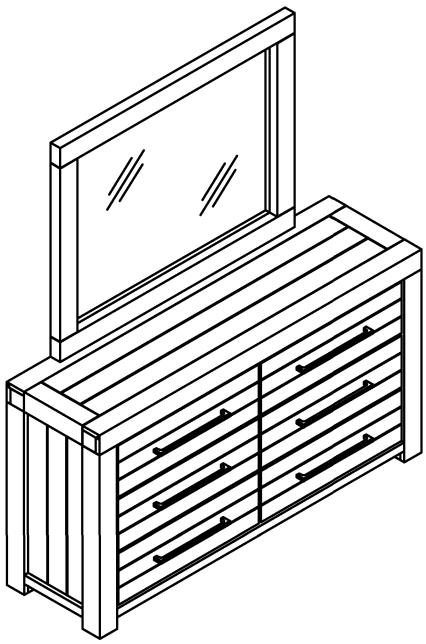

HARDWARE PACKED IN BOX #2

① ALLEN BOLT
M6x40: 10PCS

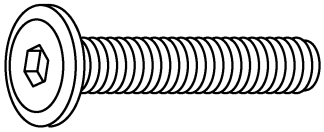

② ALLEN KEY
K4x59: 1PC

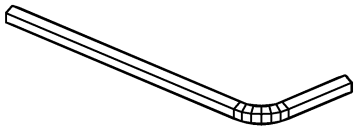

MIRROR DRESSER
ASSEMBLY INSTRUCTIONS

STEP 1

Attach the mirror supports (C) to the backside of the dresser using two Allen bolts (1) per mirror support. Tighten using the provided Allen key (2) but do not tighten completely.

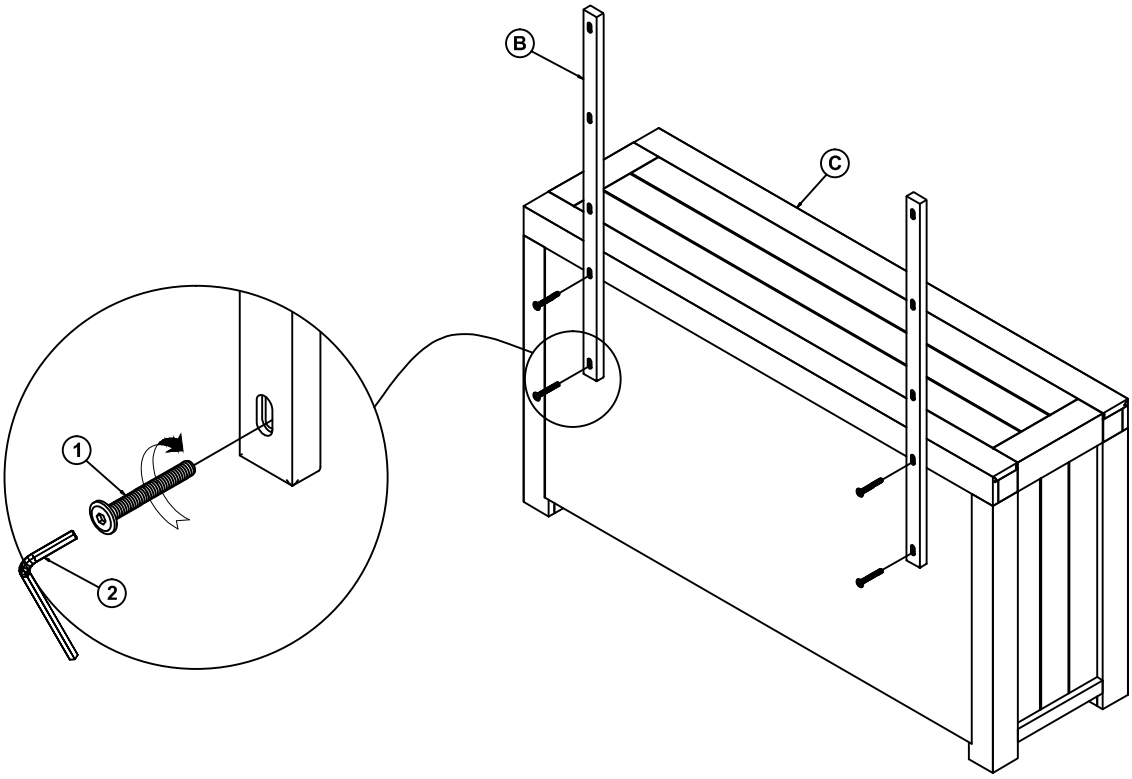

STEP 2
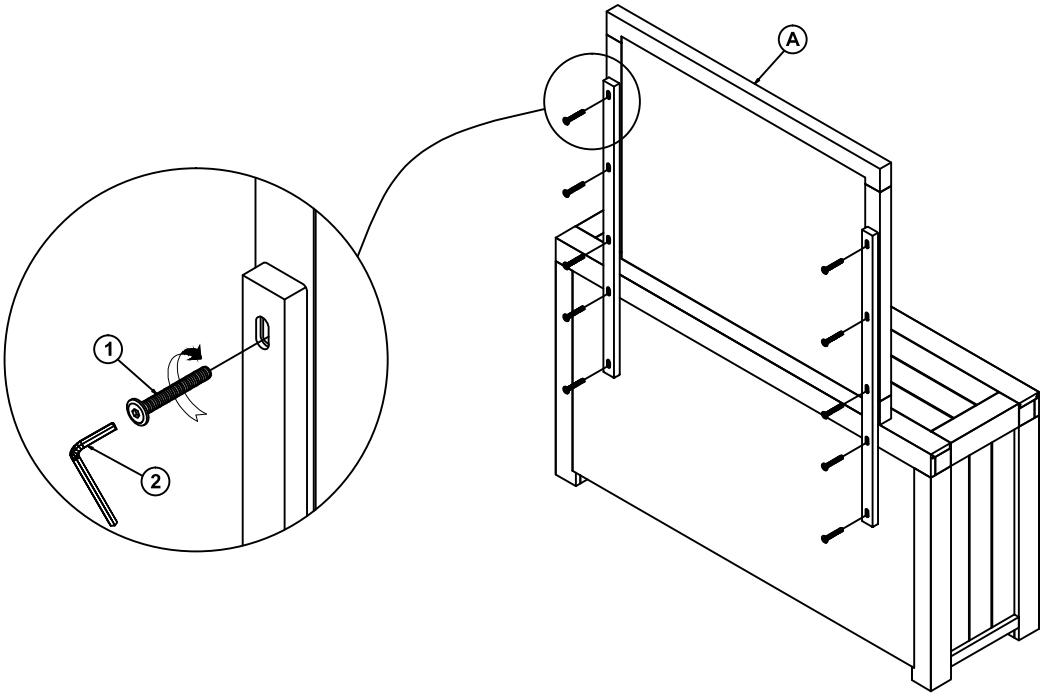
Attach the mirror (A) to the mirror supports using two Allen bolts (1) per mirror support. Tighten using the provided Allen key (2). Tighten all 10 Allen bolts completely using the Allen key.