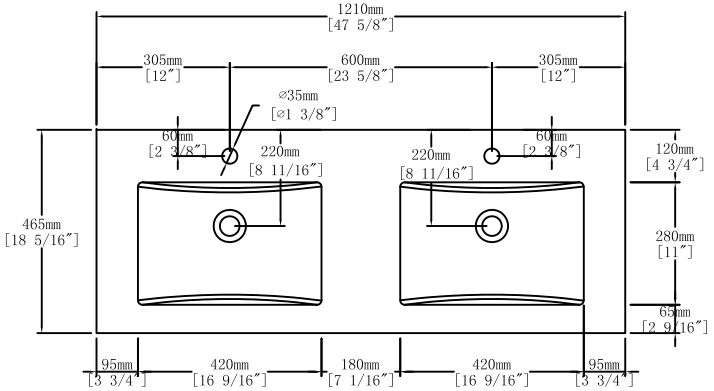


Top View

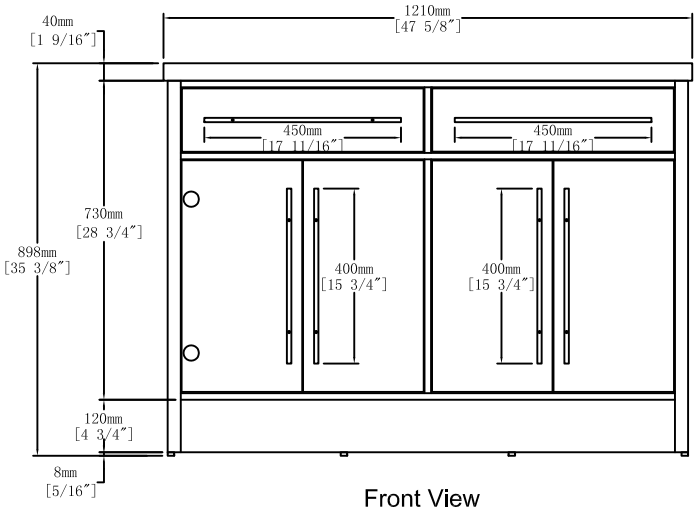


Front View

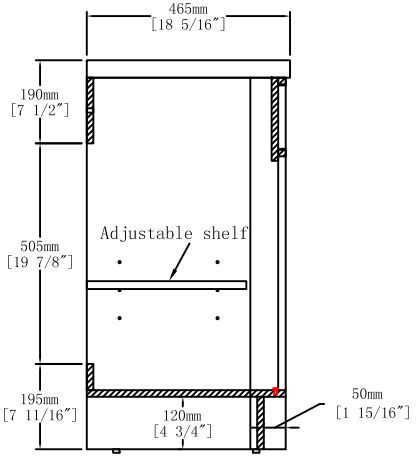

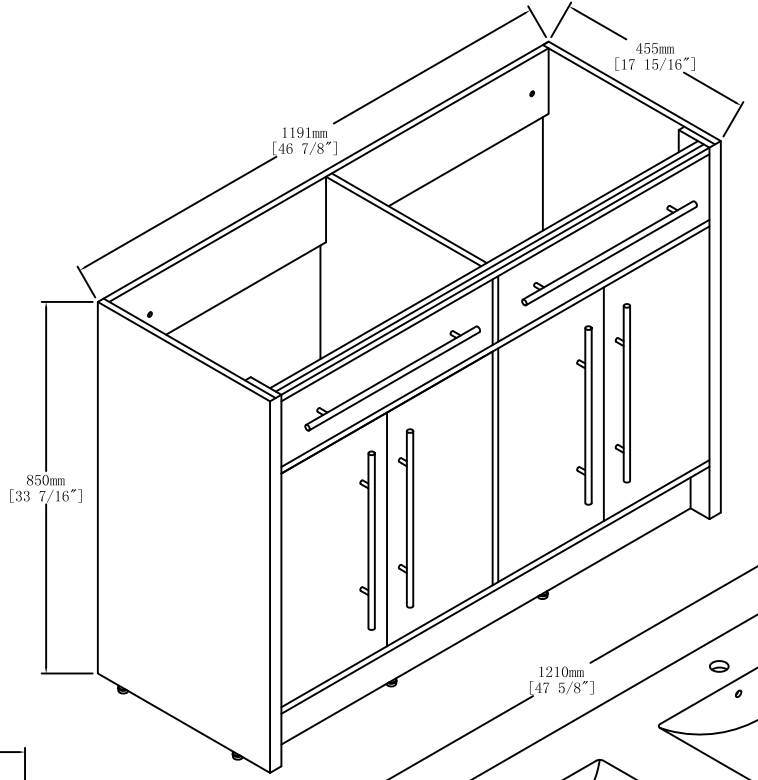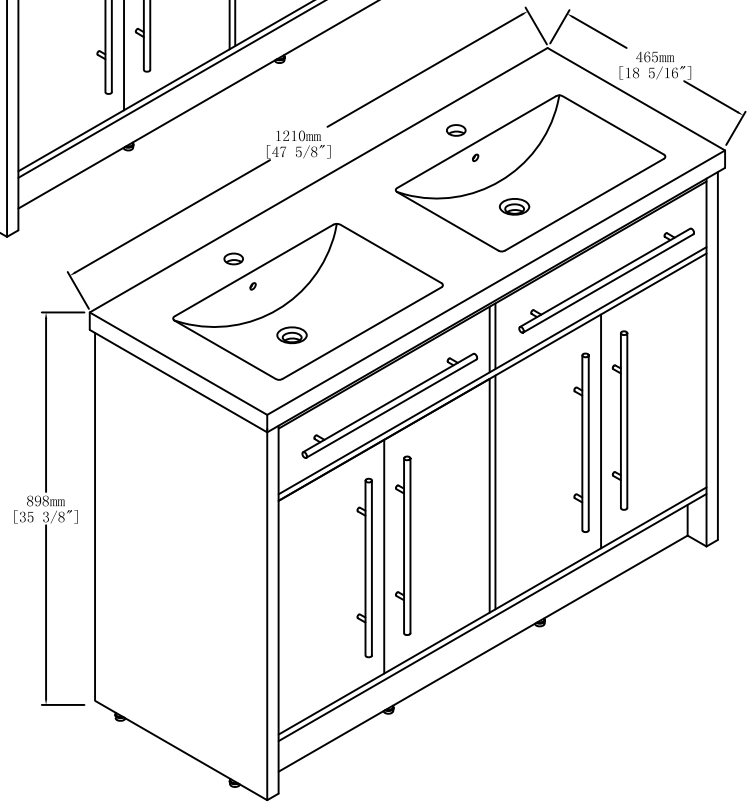
Side View