Assembly Instruction

ITEM

PARTS	A	B	C	D	E	F	G			
QTY	1	1	1	2	1	1	1			

PARTS	H1 6x30mm	H2	H3	H4	H5 6x15mm	H6 6x25mm				
QTY	8	8	4	1	4	4				

STEP 1

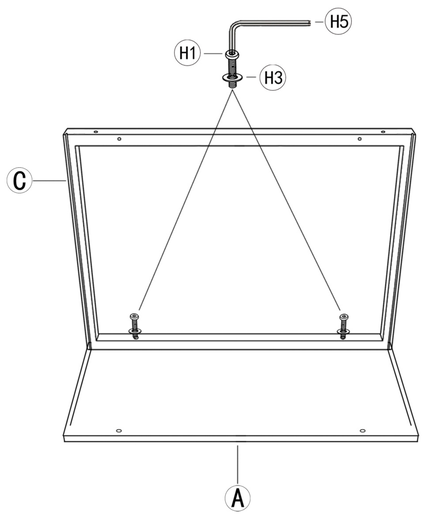

STEP 2

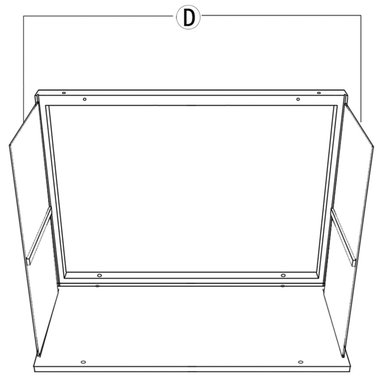

STEP 3

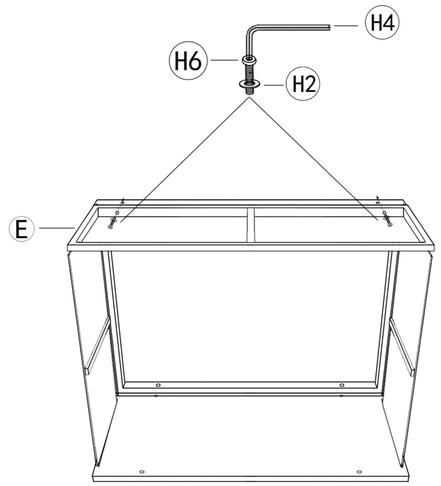

STEP 4

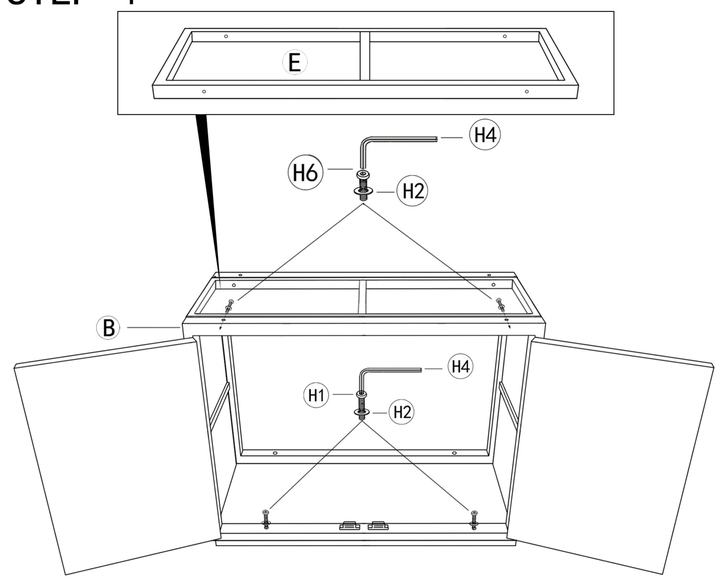

STEP 5

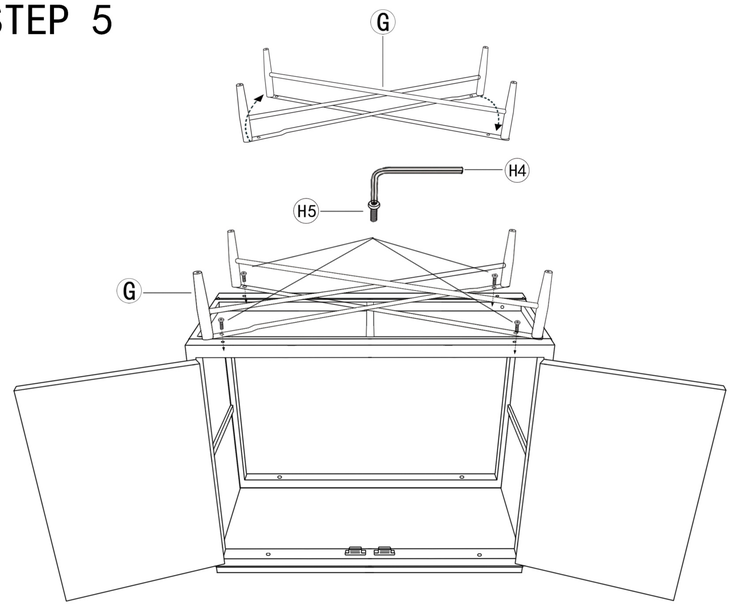

STEP 6

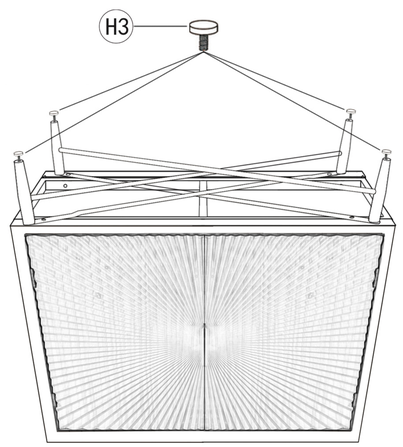

You can adjust the feet if the cabinet is uneven.
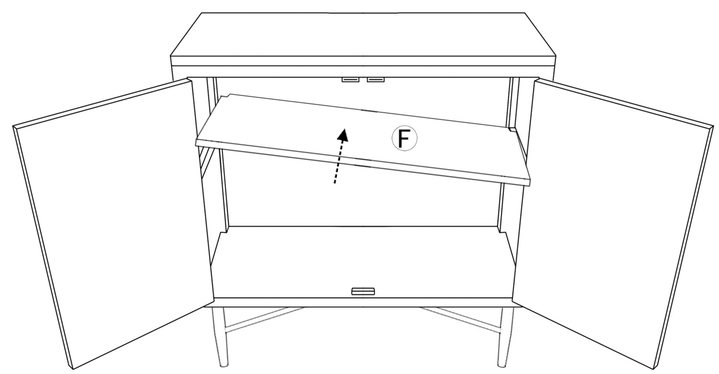
STEP 7