INSTALLATION
Product Manual

Gas Fire Table

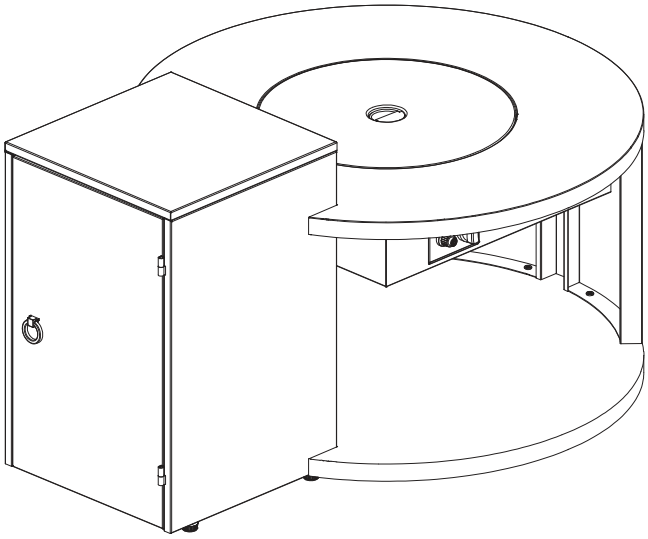

DANGER

FIRE OR EXPLOSION HAZARD

If you smell gas:

- **Shut off gas to the appliance.**
- **Extinguish any open flame.**
- **If odor continues, leave the area immediately.**
- **After leaving the area, call your gas supplier or fire department.**

Failure to follow these instructions could result in fire or explosion, which could cause property damage, personal injury, or death.

WARNING

Do not store or use gasoline or other flammable vapors and liquids in the vicinity of this or any other appliance. An LP-cylinder not connected for use shall not be stored in the vicinity of this or any other appliance.

WARNING: If the information in this manual is not followed exactly, a fire or explosion may result causing property damage,personal injury,or loss of life.

WARNING

Installation and service must be performed by a qualified installer, service agency, or the gas supplier.

WARNING

Improper installation, adjustment, alteration, service or maintenance can cause injury or property damage. Refer to the owner's information manual provided with this appliance. For assistance or additional information consult a qualified installer, services agency or the gas supplier.

INSTALLER:
Leave this manual with the appliance.
CONSUMER:
Retain this manual for future reference.

Intertek
5024394

DANGER

CARBON MONOXIDE HAZARD

This appliance can produce carbon monoxide which has no odor.

Using it in an enclosed space can kill you.

Never use this appliance in an enclosed space such as a camper, tent, car or home.

SAFETY INFORMATION

Before you assemble or operate this unit, please carefully read this entire manual. Failure to do so may result in a fire, explosion, injury or death.

⚠ WARNING

- The installation of this unit must adhere to local codes or Propane Storage and Handling Code, CSA B149.2.
- THIS UNIT IS INTENDED FOR OUTDOOR USE ONLY! This product shall be used outdoors, in a ventilated space and shall not be used in any enclosed area.
- This unit is to be used with propane gas only! (sold separately)
- Do not attach a remote gas supply to this unit.
- Only use propane gas for this unit.
- Solid fuels shall not be burned in this appliance.
- When igniting this unit, stay away from the burner as the flame will light up and may cause injury.
- LP GAS WARNING: Do not use any more than 1/4in depth lava rocks/pumice stones/LavaGlass above the burner holes. Doing so will suffocate the flame.
- If the propane gas tank is leaking gas, you may hear, see, or smell a hiss. Do the following:

1. Disconnect the propane gas tank. 2. Do not attempt to fix the problem yourself. 3. Contact your gas supplier or fire department for help.

- Applying too much propane may result in gas pooling and will not burn. Allow fresh air into the unit so that the remaining gas may escape.
- Do not use a flame to check for gas leaks.
- Manifold pressure: 11 inch w.c. (2.74kPa).
- Use LP propane tanks with the following dimensions: diameter 12 in, height 18 in - capacity 20 lbs.
- You must use a propane tank that has a collar to protect the gas valve.
- DO NOT fill tank over 80 percent full.
- The tank system must be set up for vapor withdrawal.

Do not burn anything other than the provided materials for this fire table.

- Keep away from the unit for the first 20 minutes after igniting your unit for the first time, as lava rocks/pumice stones/LavaGlass could pop out and cause injury. Should any rocks pop out, discard them.
- Always ensure that lava rocks/pumice stones/LavaGlass are completely dry before use. Failure to do so will cause them to crack or pop.
- Do not operate unit until all parts are fully assembled.
- Do not paint or color any part of this heating unit.
- Unit may be hot while in use, do not attempt to move it while in use.
- Never leave this heating unit unattended while in use.
- This unit is not intended for cooking.
- Keep any flammable items away and do not use any other fireplace cover for this unit.
- Keep a safe distance to avoid burning skin or clothing.
- Do not sit or rest hands or feet on this heating unit.
- Never place hands or fingers on upper portion of this unit while in use.
- Keep all electrical cords and fuel supply hose away from heated surfaces.

- Combustible material should not be within 72 inches of the top of the unit, or within 48 inches around the entire unit.
- Keep the appliance area clear and free from combustible material, gasoline and other flammable vapors and liquids.
- If the flame goes out while burning, turn the gas valve off. Wait 5 minutes before repeating the initial lighting procedure. Once you have a flame started, hold down the control knob for 1 minute.
- Do not add water into the unit.
- Do not operate unit if any part has been under water. Immediately call a qualified service technician to inspect the appliance and replace any part of the control system and any gas control that has been under water.
- Do not disconnect any part while unit is in use.
- Do not store a spare propane tank on or near this unit.
- If the heating unit is indoors, detach the propane tank and leave outdoors.
- Do not operate on a boat or vehicle. This unit must be used on a flat surface and outdoors ONLY.
- Always remove protective cover before operating (if applicable).
- Do not set the protective cover over the unit until it is turned off and completely cooled down.
- Check for leaks after not using the unit for long periods of time.
- **Children should never operate this unit. Children must be supervised while near this unit.**
- Keep gas tank at least 5 feet away from unit when lit. (if external tank)
- Maximum gas supply: 250 psi; Min. gas supply: 10 psi.
- **All installation and repair should be done by a qualified professional. This unit should be inspected annually and cleaned regularly.**
- Inspect all elements of this heating unit before each use. If there is damage, the burner must be replaced.
- Keep the hose out from any pathways to eliminate any accidental damage. (if external tank)
- Be aware of the hazards of high temperatures and stay away from the unit to avoid any burns or injury.
- The gas supply tank should be constructed and marked with the specifications for the LP gas tanks of the U.S. Department of Transportation or the National Standard of Canada CAN/CSA-B339, LP gas tanks, spheres and tubes for Transportation of Dangerous Goods; and Commission.
- The LP gas tank must have a listed overfilling prevention device and a QCCI or Type I, (CGA791) LP gas tank connection.
- This heating appliance should not be used on plastic or artificial wood decks.
- **Children and adults should be alerted to the hazards of high surface temperatures and should stay away to avoid burns or clothing ignition.**
- **Young children should be carefully supervised when they are in the area of the appliance.**
- **Clothing or other flammable materials should not be hung from the appliance or placed on or near the appliance.**
- **Any guard or other protective device removed for servicing the appliance shall be replaced prior to operating the appliance.**
- **Installation and repair should be done by a qualified service person. The appliance should be inspected before use and at least annually by a qualified service person. More frequent cleaning may be required as necessary. It is imperative that the control compartment, burners and circulating airways of the appliance are kept clean.**

IF APPLICABLE:

- Allow heating item to cool completely before placing on lid.
- DO NOT use heating item while lid is installed. Always remove the lid while heating item is in use.

SAFETY INFORMATION

Only use the regulator and hose assembly provided with this unit. Replacement parts must be supplied directly by Customer service .

NOTE: You must follow all steps to properly assemble this heating item. Make sure the gas valve is turned “OFF” before assembling. Do NOT attempt to assemble without proper tools.

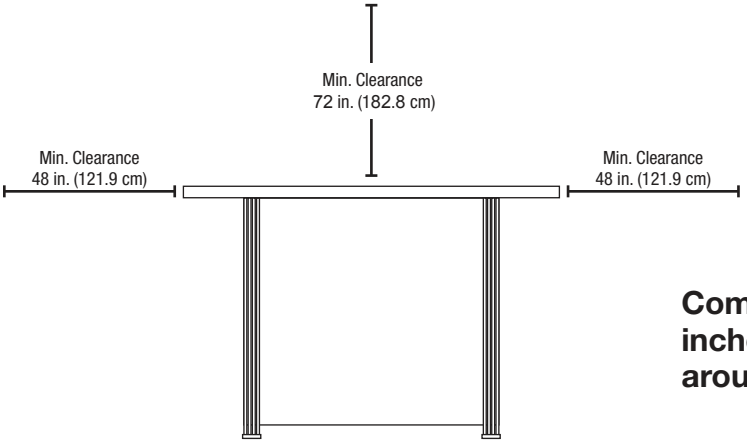

Combustible materials should not be within 72 inches of the top of the unit, or within 48 inches around the entire unit.

PART LIST

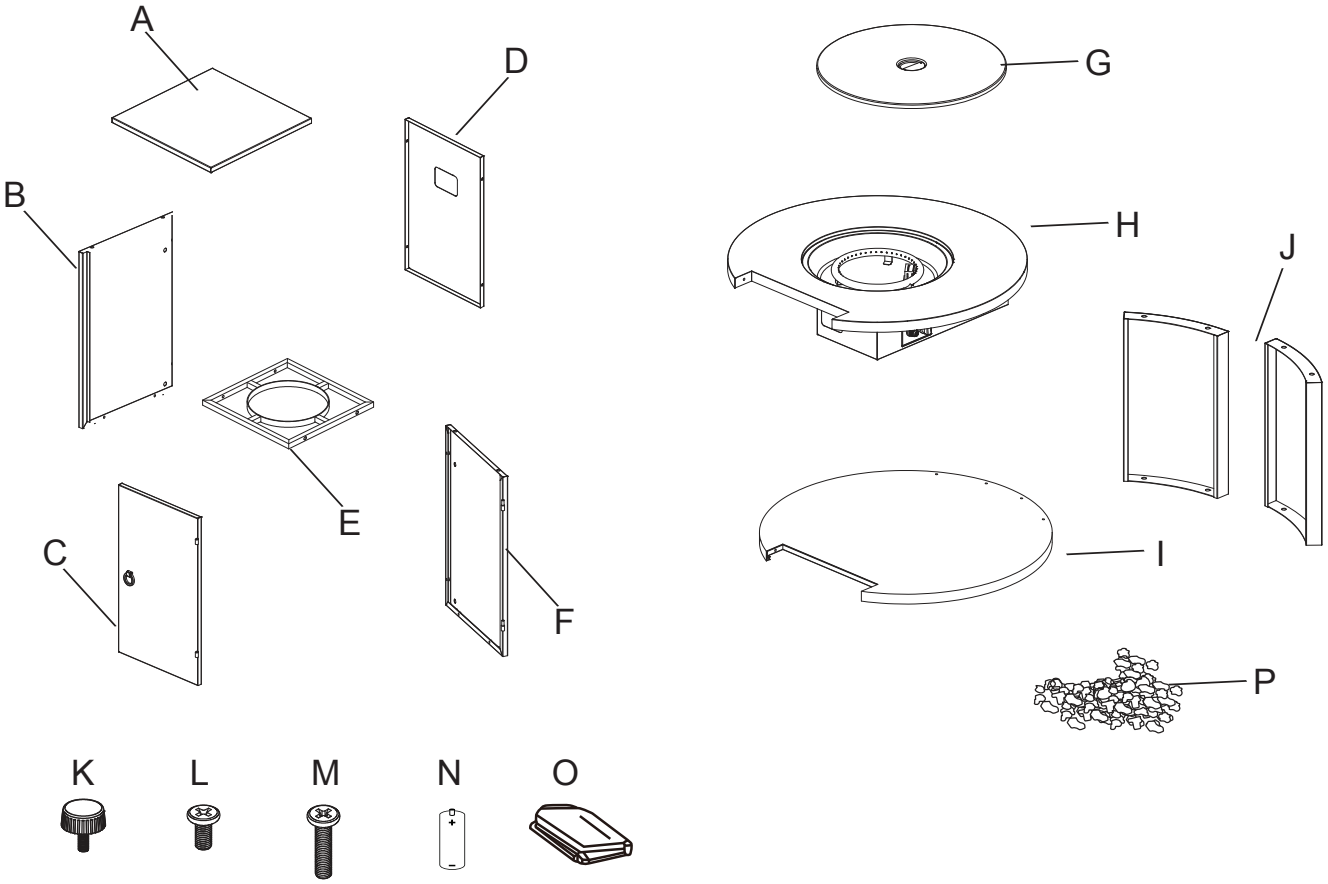

Item	Description	Qty
A	Lid	1
B	Panel 1	1
C	Door	1
D	Panel 2	1
E	Metal Stand	1
F	Panel 3	1
G	Lid	1
H	Table Top	1
I	Bottom panel	1
J	Right panel	2
K	Adjustable foot	6
L	Screw M6*12mm	20
M	Screw M6*30mm	4
N	Battery(AA)	1
O	PU Cover	1
P	Lava rock	1 Box

ASSEMBLY INSTRUCTION

1.Attach 4pcs adjustable pads(K) to the bottom of Panel(B/F).

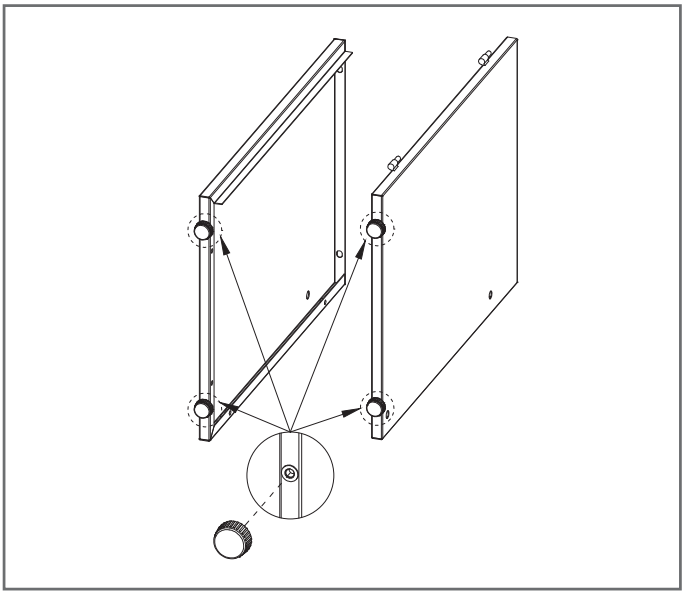

2.Use 4 Long Screws(M) to fix the Metal Stand(E) to the propane tank holder which finished assembly in step No.1. (Pay attention to direction of the Metal Stand).

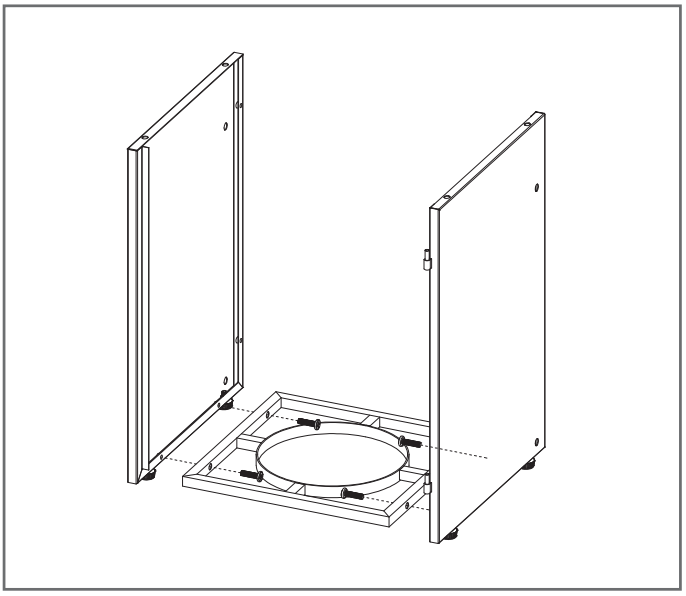

3.Use 4 Short Screws(L) to fix 3 Panels(B,D,F)together. (Pay attention to order and direction of the panels).

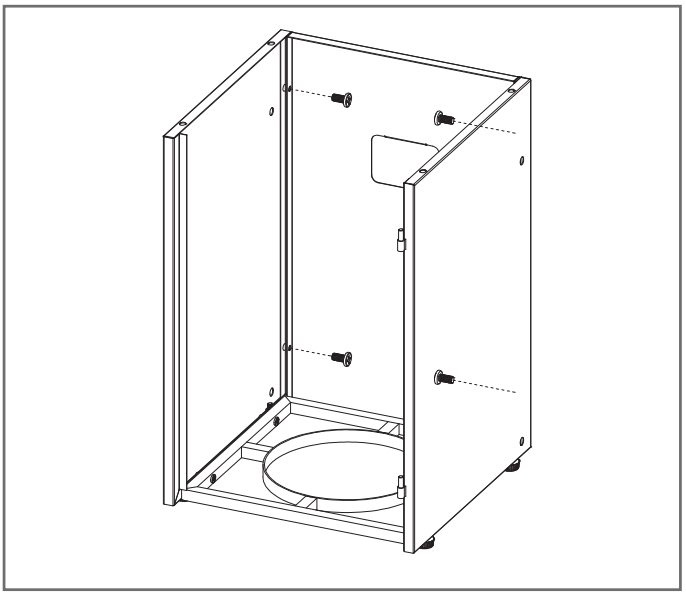

4.Fix 2 Adjustable foot pads(K) at the two corners of the Bottom Panel(I).(Pay attention to the up and down direction of the Bottom Panel).

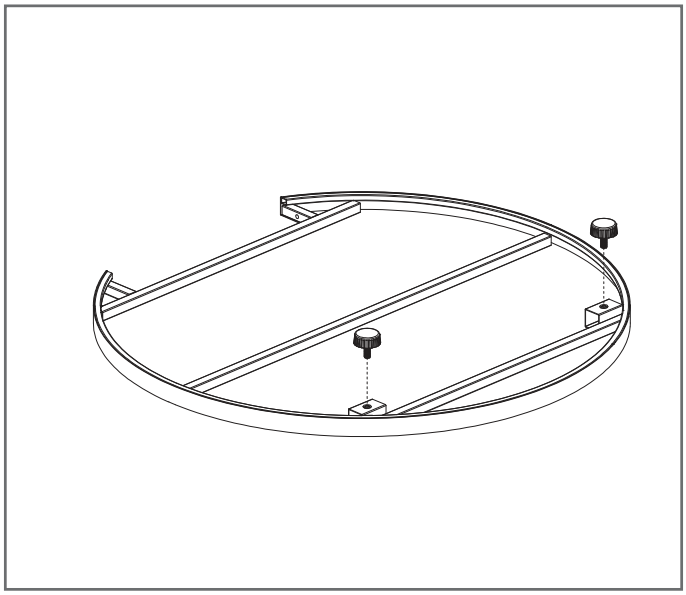

5.Combine the Bottom Panel(I) with the propane tank holder which finished assembly in step No. 3, as shown in the figure. (Pay attention to order and direction of the panels).

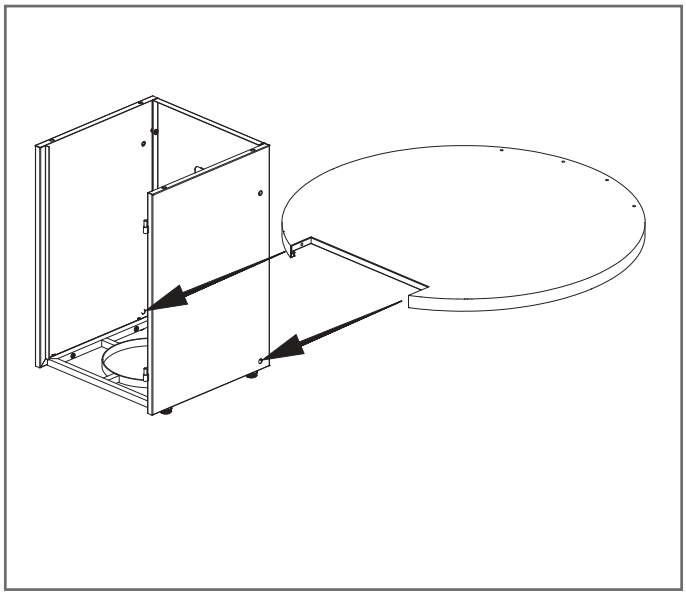

6.Use 2 Groupes of Short Screws(L) to fix the Bottom Panel(I) to the propane tank holder which finished assembly in step No. 3. (Pay attention to the up and down direction of the Bottom Panel).

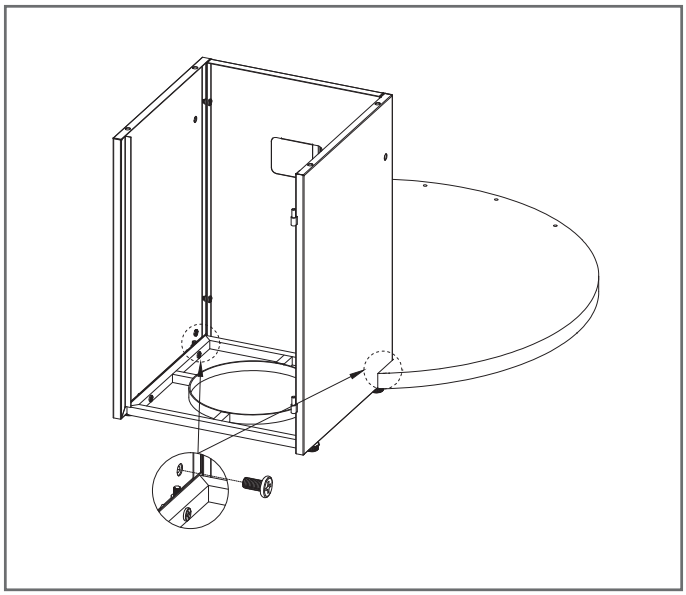

7.Use 4 Groupes of Short Screws(L) to fix the Right Panel(J) to the Bottom Panel(I). (Pay attention to the front and back direction of the Right Panel).

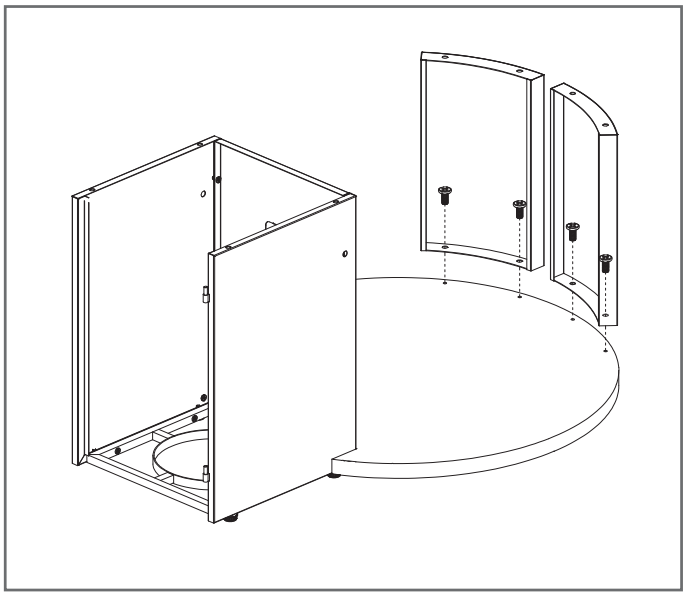

8.Put one end of the Table top Panel(H) to the two sides of the propane tank holder. Put the other end of the Table top Panel(H) to the Right Panel(J) (Pay attention to the up and down direction of the Table top Panel).

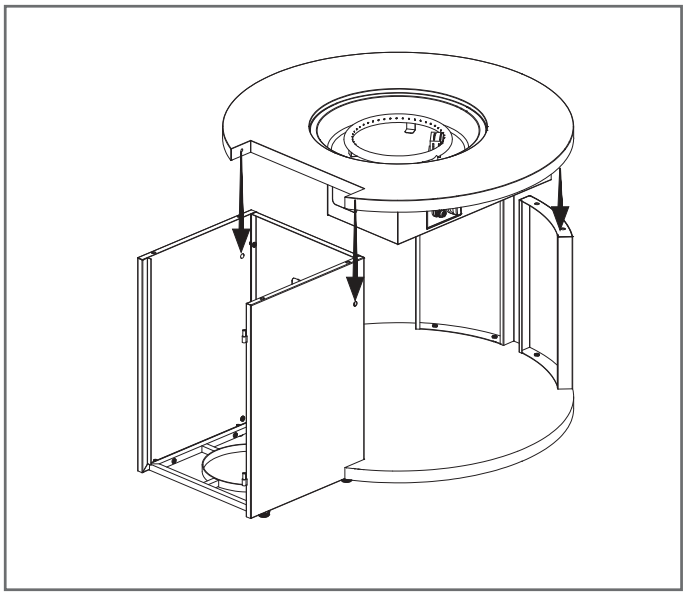

9.Use 2 Groupes of Short Screws(L) to fix the Table top Panel(H) to the propane tank holder which finished assembly. (Pay attention to the up and down direction of the Table Top Panel).
Use 4 Groups of Short Screws(L) to fix other end of the Table top Panel(H) to the Right Panel(J).

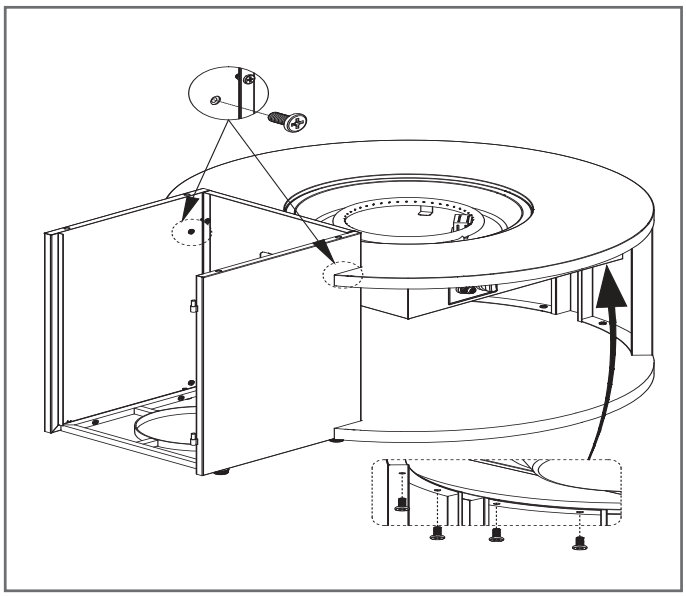

10.Use 4 Groupes of Short Screws(L) to fix Lid(A) to the two Panels(B,F) together. (Pay attention to the direction of the Lid).

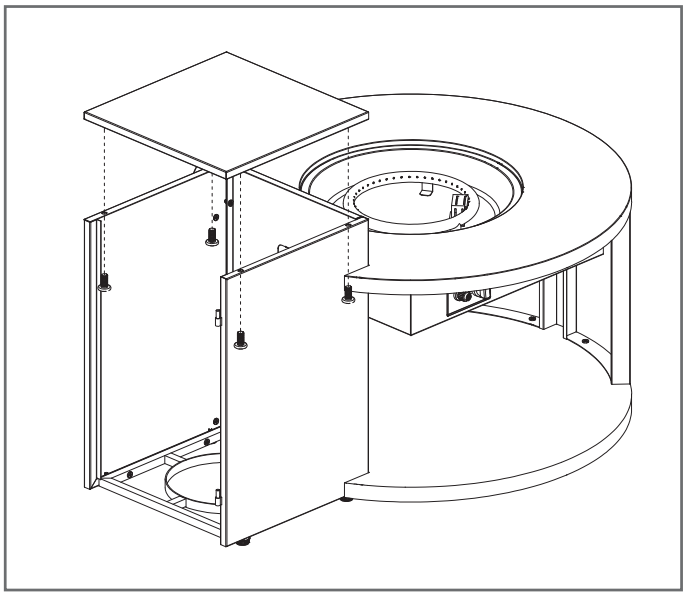

11.Hang the upper and lower hanging holes on the Door Panel (C) into the two hanging posts on the Panel (F) to complete the installation of the cabinet door. (Pay attention to the front and back direction of the Door Panel)

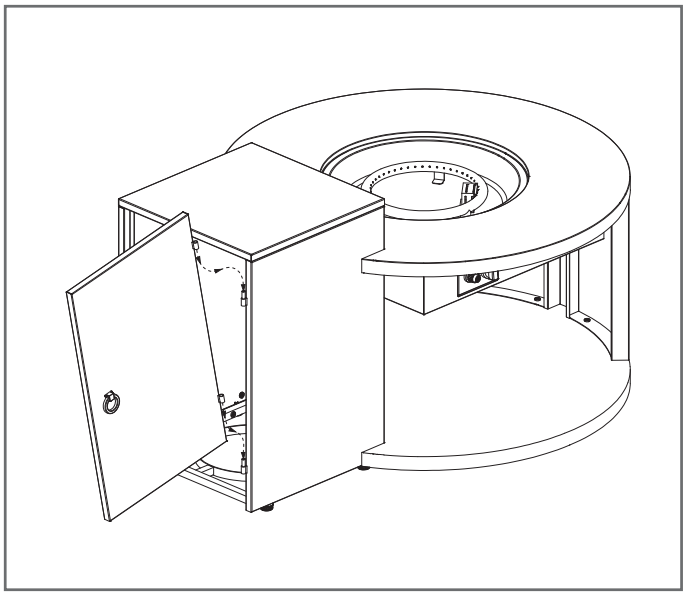

12.Put the Lid(G) on the Fire Pit of the Table top Panel(H).

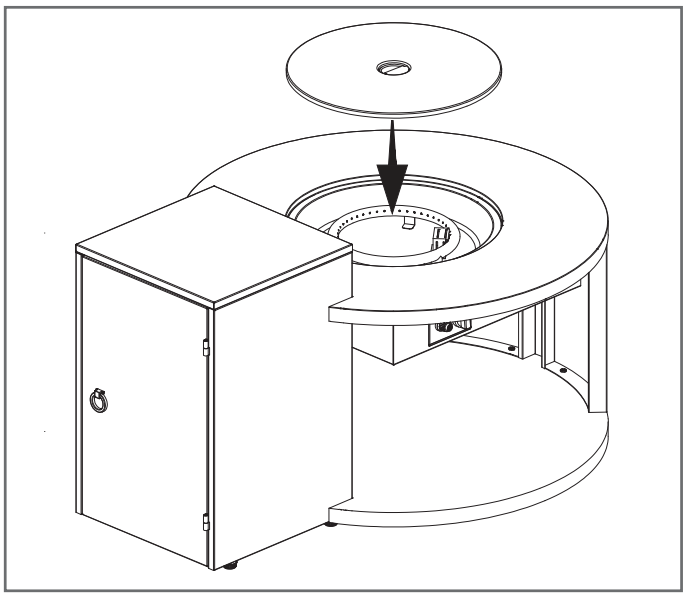

Place propane gas tank (not included) into the metal stand (E). Make sure the gas tank sits on the metal stand (E) completely.
Turn the preassembled Wing Screw in a clockwise direction in to the Nut to secure the propane gas tank tightly.

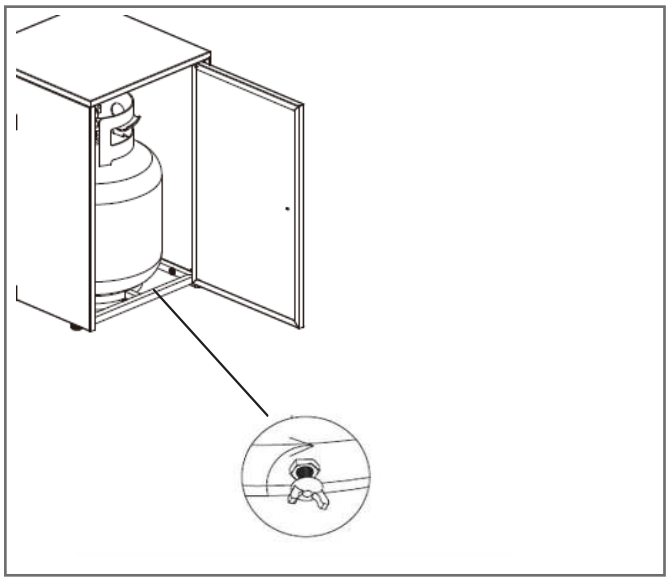

Turn the cylinder valve on the tank clockwise to close the propane tank. Attach the preassembled regulator from the table top to the cylinder valve by turning the regulator coupling nut clockwise. Make sure it is fastened securely and tighten connections by hand only.

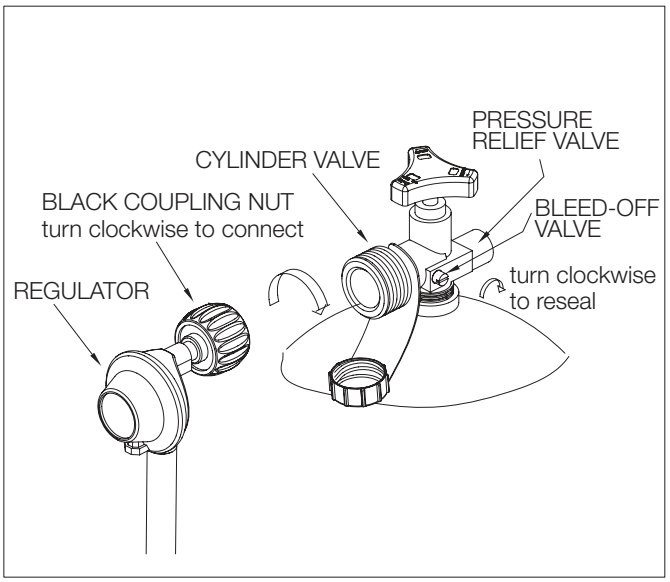

Pour the fire lava rocks into the firebowl.

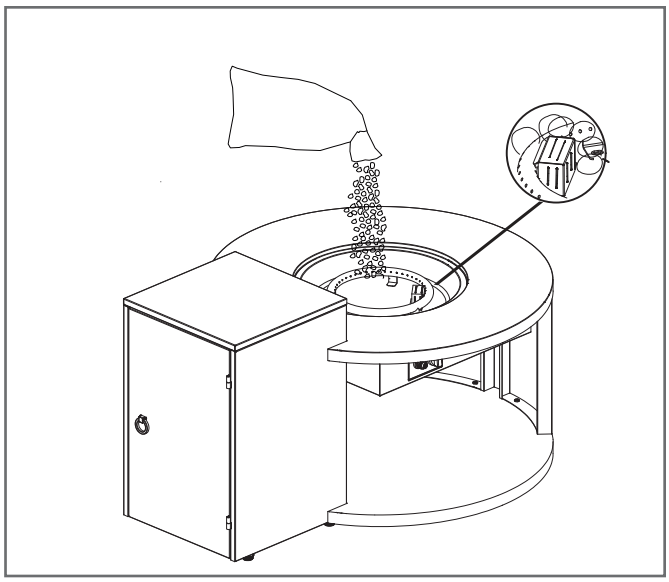

CAUTION

To ensure proper function, the guard on this burner should be free of fire lava rocks at all times.

OPERATION

Before performing a leak test, be sure that no sparks can occur and you are in a spacious outdoor area. Connect the propane gas tank to the regulator and turn the valve on the unit to the “off” position. Brush a soap and water mixture on all connections. Turn the gas supply on; if bubbles occur on any connection there may be a leak. **If you smell gas or a leak is discovered turn the gas valve off, disconnect propane gas tank and do not use the appliance until the leak is repaired.**

Do not use the heating unit without inspecting the gas hose. If there are signs of wear or abrasion you must replace the hose (if applicable). Pumice stones/lava rocks/Lava Glass could pop up and strike somebody’s face during the process of lighting this unit; stand away from the unit for the first 20 minutes after igniting. Flame height should be a yellow/blue color between 2 - 10 inches in height.

Wait 50 minutes after extinguishing flame prior to placing a lid (if applicable) or protective cover on heating item.

Assembling the battery

Remove the rubber cap on the electronic igniter by unscrewing and slide battery into the battery slot. Make sure the positive side of the battery faces outwards. Screw the electronic igniter cap over the battery tightly.

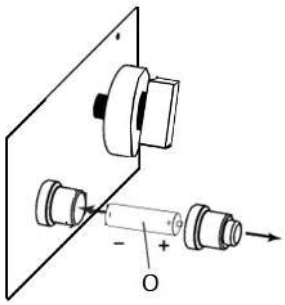

To Light

1.Make sure the control knob is in the "OFF" position.
2.Open the door and slowly open the valve on the propane gas tank by turning the knob counterclockwise.
3.Insert battery and connect propane cylinder.
4.Press and hold the electric igniter.
5.Push and turn control knob counter clockwise to “HIGH”.
6.Keep pushing the control knob to light the burner.
7.After ignition, release the electric igniter. Continue to push and hold the control knob for 15 seconds. Adjust flame to desired flame with the control knob.
8.If ignition does NOT immediately take place in seconds, push and turn the control knob clockwise to “OFF”. Wait 5 minutes, and then repeat the lighting procedure as above.
9.To adjust the flame, turn the control knob either clockwise or counterclockwise depending on whether you want to lower or raise the flame.

To Extinguish

1. Push the control knob and turn clockwise to the “OFF” position.
2. Turn the cylinder valve on the gas tank clockwise to close the gas supply if not in use for a long time.

MAINTENANCE

- Before performing any maintenance always disconnect propane gas tank.
- **Store your product indoors during winter months. Avoiding extreme cold temperatures will prevent from exposure damage.**
- Keep the heating item free and clear from combustible materials.
- Visually inspect burner for obstructions and keep tank enclosure free and clear from debris.
- Use a soft brush to get rid of the mild stains, loose dirt and soil after the burner and pumice stones/ lava rocks/LavaGlass are completely cooled down. Wipe down with a soft cloth.
- Harsh weather conditions may cause stubborn stains, discoloration and possibly rust pitting.
- Permanent damage may occur if powder or solvent comes in contact with painted or plastic components on this heating unit.
- Keep the heating unit stored away from direct sunlight.
- If storing this unit inside, disconnect the propane gas tank from the gas valve.
- Not using manufacturer approved or supplied parts/accessories may result in a defective condition and void the warranty of this heating unit.
- Always place lid (if applicable) or protective cover on heating item when not in use.

TROUBLESHOOTING

Problem	Cause	Solution
Heating unit won't light	Igniter pin and burner are wet	Dry off with a soft cloth
	Igniter battery is incorrectly inserted	Check which direction the battery is inserted
	Igniter pin is broken	Contact Customer service for a replacement part
	Electrode wire is loose or disconnected	Reconnect wire to the igniter box located inside the fire pit behind the igniter box
	Electrode wire is shorting between valve and igniter pin	Contact Customer service. for a replacement part. for a replacement part
Burner won't light while using a match	No gas flow	Check that the gas tank isn't empty
	Regulator isn't connected securely to the tank	Tighten regulator connection to the gas tank
	Gas flow is obstructed	Check all hoses for kinks and bends
	Burner ports are clogged	Turn all gas flow connections off. Insert an opened paperclip (or similar item) into each of the burner ports to clear them out.
Heating unit emits a lot of black smoke	Flame is obstructed at burner ports	Check that all burner ports are free of any small lava rocks/pumice stones/ LavaGlass pieces
	Regulator hose is kinked	Straighten hose of all bends or kinks
Sudden drop in gas flow	No gas flow	Check that the gas tank isn't empty
	Excess flow safety valve has been activated	Turn the control knob to the 'off' position. Close the tank valve and disconnect propane gas tank. Turn the control knob to 'high'; wait 1 minute. Turn the control knob back to the 'off' position. Reconnect propane gas tank. Light the fire unit as indicated in the 'To Light' section of this manual.
Flame blows out easily	High or gusting winds	Increase flame to 'high'
	No gas flow	Check that the gas tank isn't empty
	Excess flow safety valve has been activated	See 'sudden drop in gas flow' above

WARRANTY

WARRANTY CLAIMS

•There is a 30-day warranty for broken furniture or any other problems that do not work properly. The warranty will start from the date of purchase which must be verified by proof of purchase.

•Before making a claim, we may be able to answer your query, simply call us. Please leave your purchase order number, along with some details of the problem, if you want a replacement part. We will arrange within 48 hours. If there is out of stock, we will reply with a shipping date.

•The product must be used in accordance with the instructions provided. For health reasons.

•For other reasons, if the furniture needs to be returned, it must be cleaned and dried and operated within 30 days of receipt.

Type of Warranty Claim

•Failure to follow the furniture instructions will invalidate the warranty. Attention please.

•Does not include damage during installation, but includes damage during transportation.

Scope of responsibility

•Shall not bear any responsibility for misuse or user damage and / or loss of parts during the installation of furniture.

•After using, the damage and scratches of the furniture are not covered by the warranty.

The Warranty Relates to All Bought in The Us and Covers The Following Areas

•Sheet parts: 1 month from the date of purchase.

•Electrical parts: 1 month from the date of purchase.

RETURNS

CHANGED YOUR MIND AND NEED TO RETURN YOU ITEM?

PLEASE FOLLOW THE BELOW INSTRUCTIONS:

- If you have purchased and have simply changed your mind, follow the retailer's instructions for returns.

DEFECTIVE ITEMS

- If your item is defective in any way, i.e. it doesn't work but you can't identify why, in the first instance, please call us.

DAMAGED ITEMS

- If you receive an order with obvious shipping damage from the retailer, then we suggest the delivery is refused. If the delivery has been accepted and then shipping damage is found, please follow the specific instructions advised by the retailer.
  In all circumstances please save all packaging material and paperwork for the order. Please be aware that if you dispose of packaging material or attempt to return the merchandise without contacting the fulfiller, you jeopardise your chances of making a claim, and you may not receive a credit for the return.