furniturebox

PENROSE

Bench
Assembly Guide

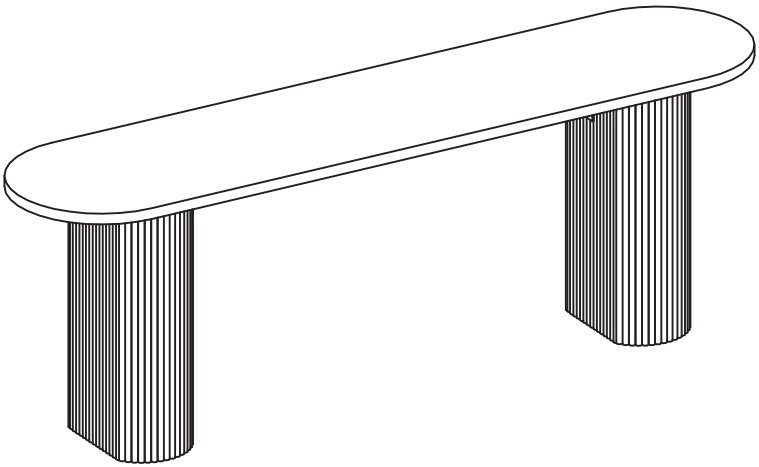

furniturebox

IMPORTANT: please read these instructions fully before starting assembly



SAFETY AND CARE ADVICE



NO POWER TOOLS

- Check you have all the components and tools listed
- Remove all fittings from their bags and separate into groups
- We do not recommend use of power tools - this could damage the unit. Only use hand screwdrivers and Allen keys
- Keep children and animals away from the work area, small parts could cause choking if swallowed
- Make sure you have enough space to lay out the parts before starting
- Assemble the item as close to its final position (same room) as possible
- Do not over tighten the nuts to avoid damage to the threads
- Only clean using a damp cloth and mild detergent. Do not use bleach or abrasive cleaners
- Do not allow children to climb or play on this product
- From time to time, check there are no loose screws in this unit
- This product should not be discarded with household waste. Take to your local authority waste disposal centre
- Unless otherwise stated, this product is designed for domestic use and is not certified for commercial or contract settings.

furniturebox

IMPORTANT INFORMATION



20 Minute Build



Two Person Build



Max Weight Capacity 120kg

Note: Assembly estimates are approximate and can differ based on the specific environment and user experience.

furniturebox

WHAT'S IN THE BOX

Note: the quantities are the correct amount to complete the assembly. In some cases more fixings may be supplied than are required.

Label	Part Name	Drawing	Quantity
1	Seat Panel	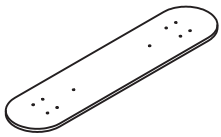	1
2	Pillar	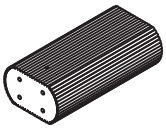	2
3	Apron	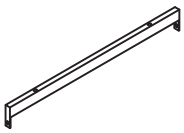	1

furniturebox

WHAT'S IN THE BOX

Note: the quantities are the correct amount to complete the assembly. In some cases more fixings may be supplied than are required.

Label	Hardware Description	Drawing	Size(mm)	Quantity
A	Spanner		8#	1
B	Allen Key		5#	1
C	Threaded Rod		M8x435mm	8
D	Bolts		M8x55mm	2
E	Bolts		M8x25mm	2
F	Nuts		M8	8
G	Washers		Ø8x18mm	12
H	Felt Pads		ø40	8

furniturebox

Note:

- Use a clear, flat surface to avoid bumps or scratches before assembling.
- Insert all fixings loosely at first to allow for alignment; only tighten them once everything is properly positioned, as some adjustment may be required.
- Avoid over-tightening, as this may damage the parts.
- Seek assistance when moving large or heavy parts

STEP 1

Place Seat Panel [1] with its underside facing up. Screw 8 x threaded rods [C] into Seat Panel [1].

NOTE: Be careful not to over tighten, prevent the threaded rods [C] from going through the Seat Panel [1].

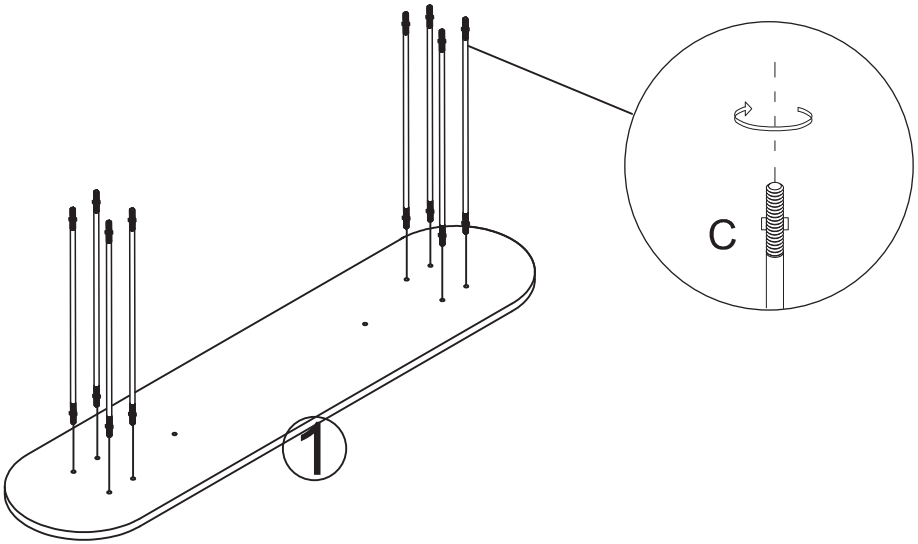

C		8 pcs

furniturebox

STEP 2

Carefully slide pillar [2] onto Seat Panel [1], making sure the threaded rods pass through the holes in pillar [2].

NOTE: Both pillar apron slots must face inwards towards each other.

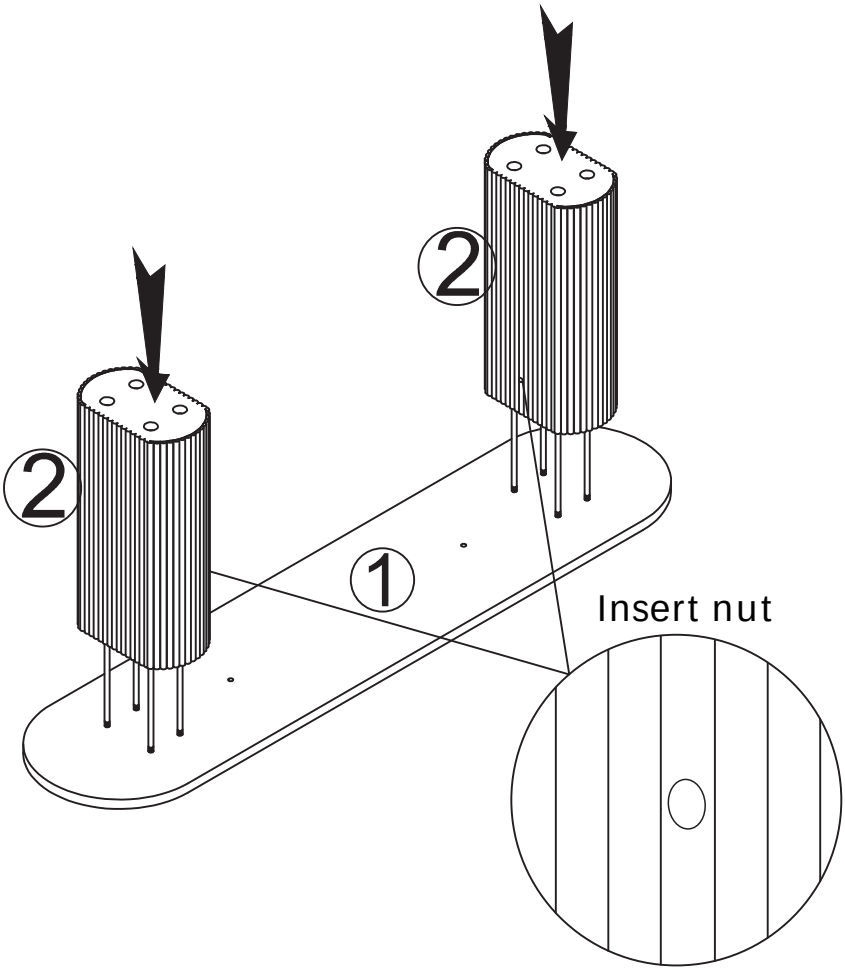

furniturebox

STEP 3

Loosely attach Apron [3] to the seat panel [1] using 2 x Bolts [D] and 2 x Washers [G] with Allen key [B].

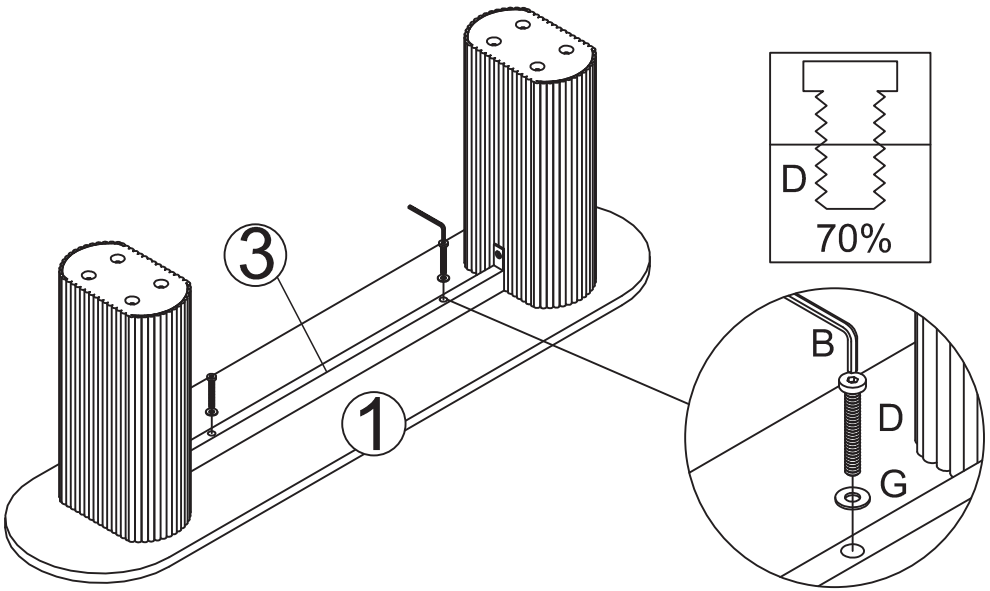

B	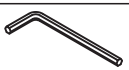	1 pc
D		2 pcs
G		2 pcs

furniturebox

STEP 4

Attach Apron [3] to the Both Pillar [2] using 2 x Bolts [E] and 2 x Washers [G] with Allen Key [B].
Fully tighten All Bolts [D] and [E] in step 3 and step 4 with Allen Key [B].

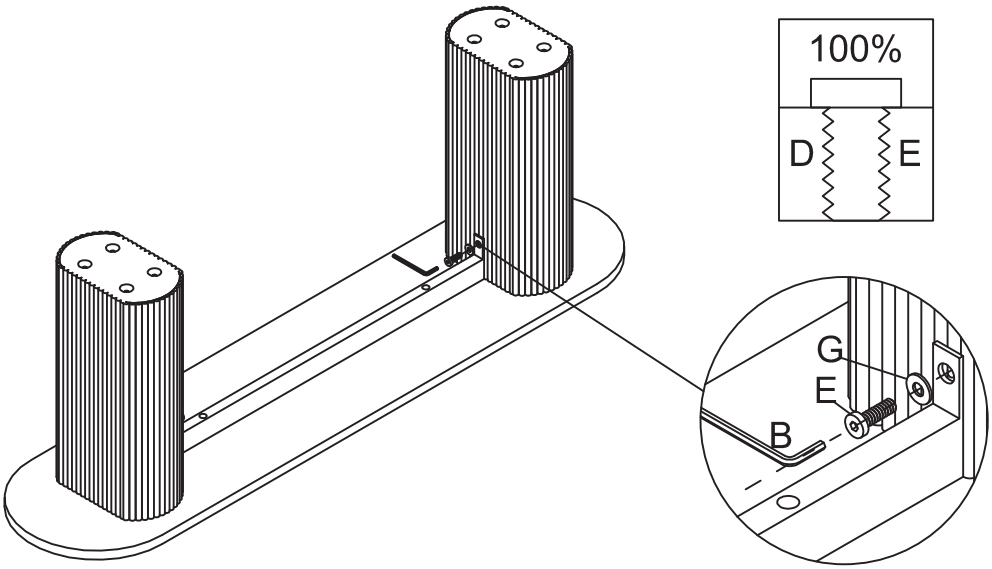

B		1 pc
E		2 pcs
G		2 pcs

furniturebox

STEP 5

Secure pillar [2] to seat panel [1] using 8 x washers [G] and 8 x nuts [F]. Tighten nuts [F] with spanner [A].

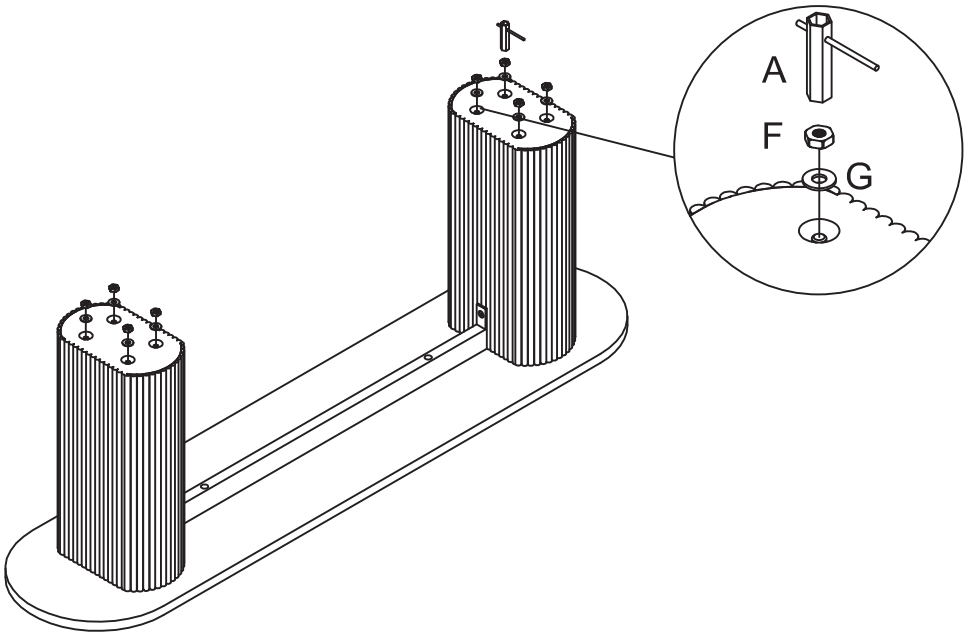

A		1 pc
F		8 pcs
G		8 pcs

furniturebox

STEP 6

Peel off the backing of a Felt Pad [H] and apply the felt pads to the underside of each pillar.

NOTE: Position the felt pads as close to the edge as possible. With help, carefully turn your bench upright.

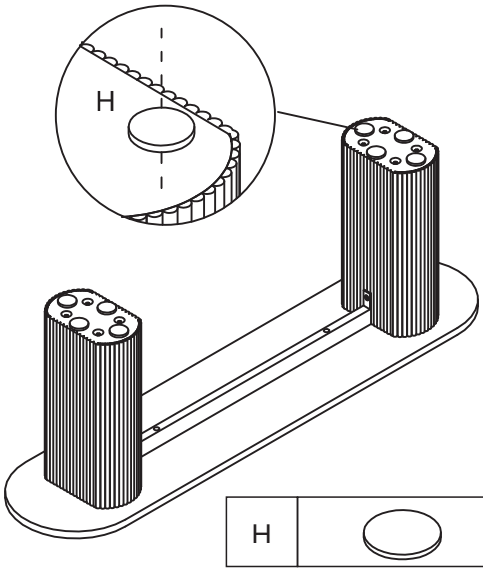

H		8 pcs

STEP 7

Carefully turn over the bench and check stability.
Your bench is complete and ready to use.

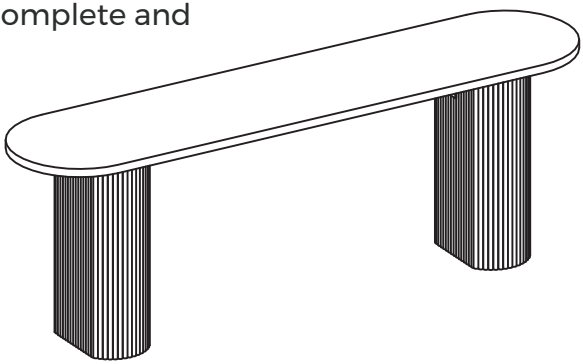

Please ensure any and all fixings and fittings are FULLY tightened before using this product

our 2 year GUARANTEE

Our products come with a 2 year guarantee, giving you extra peace of mind when shopping with us!

What the guarantee covers

PRE-INSERTED FIXINGS
e.g. loose metal threads

FAULTY JOINTS
e.g. legs bending

EXTERNAL FIXING FAULTS
e.g. metal discs removing from table top

STRUCTURAL INTEGRITY
e.g. the frame of the product

Activate your Guarantee

Scan the QR code to read the full guarantee online and register your product. It only takes a moment to fill out.
Or visit: furniturebox.co.uk/our-guarantee

Furniturebox Unit 6, Indurent Park Chippenham, Clanville Way, Chippenham, SN15 5BD, UK
Telephone: 01747 863 333 **Email:** sales@furniturebox.co.uk