ASSEMBLY INSTRUCTIONS

SKU: CX-70-8OCL

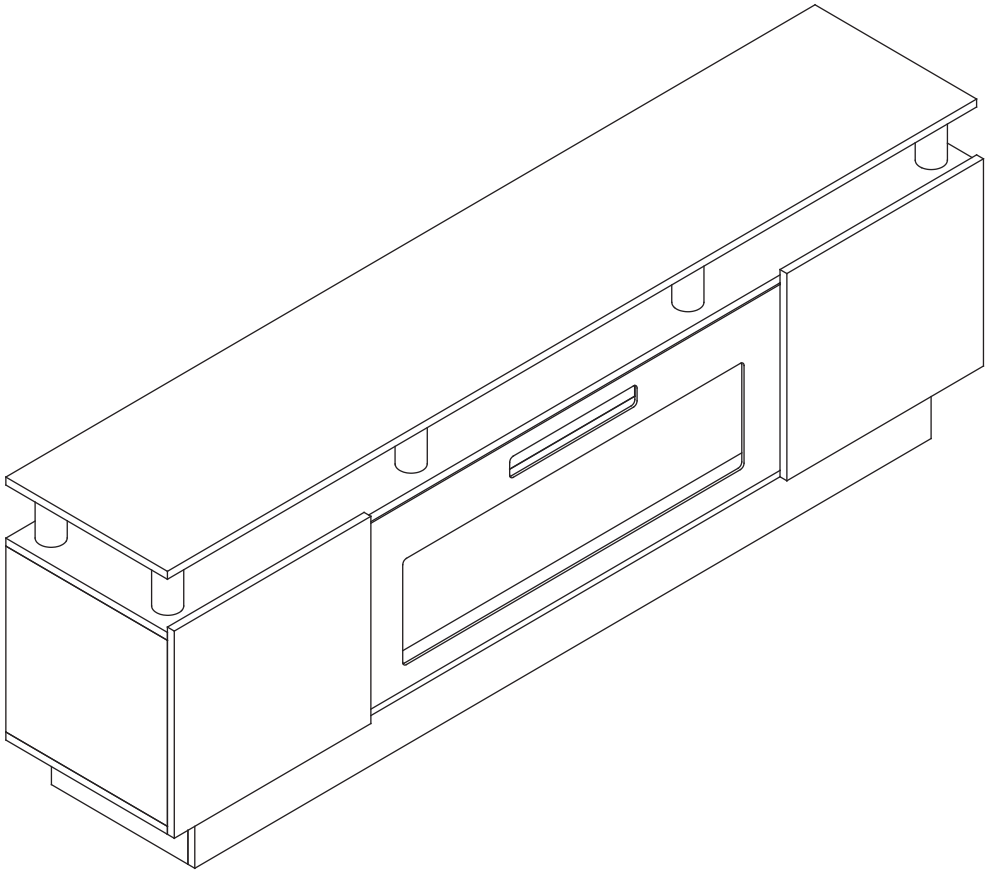

Attention: The Fireplace and TV stand come in TWO PACKAGES.
Please don’t be confused if only one package was received.

The light strip comes with fireplace. It should be installed
after TWO PACKAGES received.

hellovitesse@gmail.com

+1(503) 928-7812

HOPE YOU HAVE A PERFECT SHOPPING EXPERIENCE!

Our product is designed with excellence crafted from premium materials, and exhibits a unique sense of style. Every detail has been thoughtfully considered to bring both elegance and functionality to your space.

Whether in the office or at home, our product offers long-lasting performance and versatile use. We believe it will enhance your environment and make your daily tasks easier.

If you encounter any issues or have questions, please don't hesitate to contact our dedicated customer service team. We are always here to assist and ensure your satisfaction.

IMPORTANT SAFETY INSTRUCTIONS

Read these instructions carefully and retain them for future use.

When using the product, basic safety precautions always be followed to reduce the risk of injury, including the following:

- This product must be assembled by an adult.
- Keep children and pets away while assembling the product.
- Remove all the packing materials and review all components before assembly.
- Do not over-tighten the fasteners.
- To avoid scratching the floor, assemble the product on a soft surface, such as a carpet.
- Do not use this product if any parts are missing, damaged, or worn.
- Always use the product on a firm, level ground.
- Do not let the children climb on or play with the product.
- Do not stand on the seat.
- Keep all sharp objects away from the upholstery.
- Regularly examine the product for wear and tear. Stop using the product at the first sign of damage or if the parts detached.

PARTS LIST

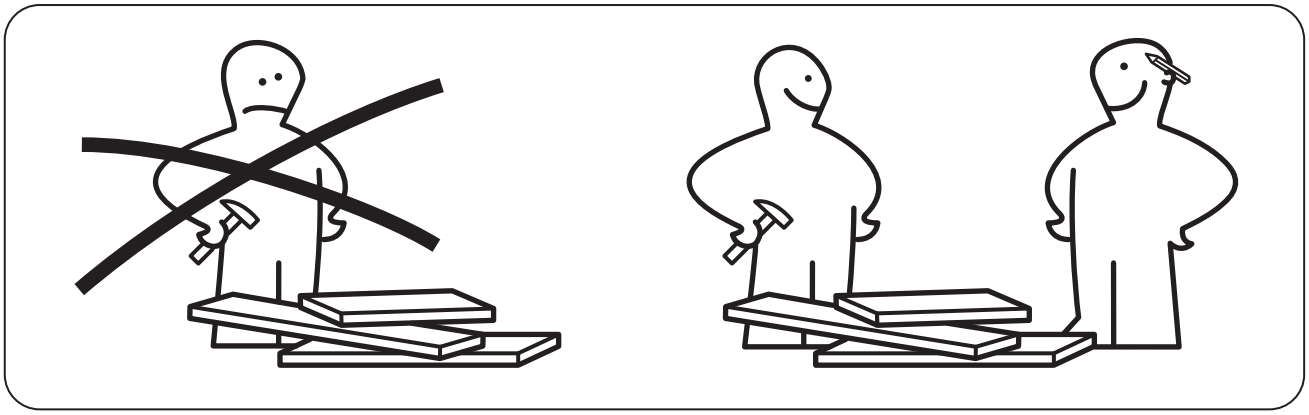

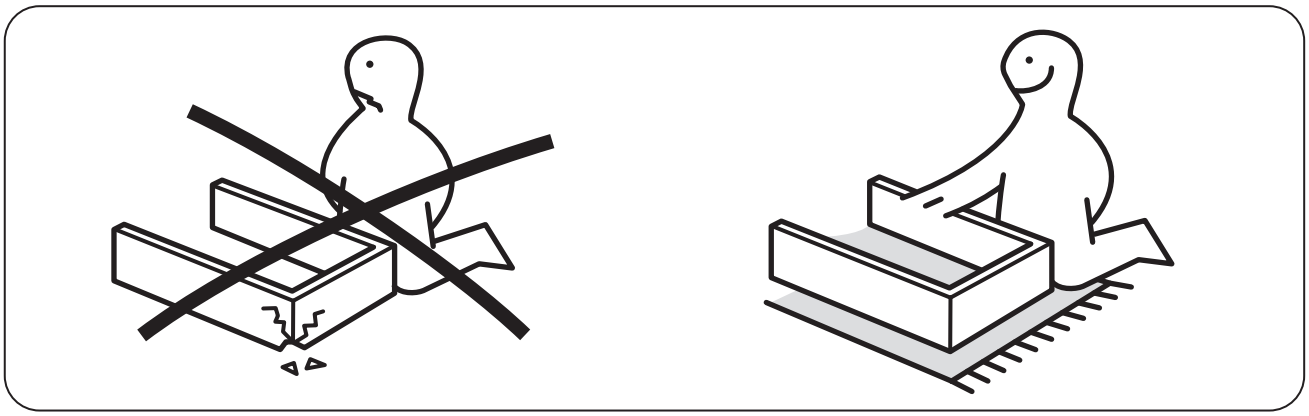

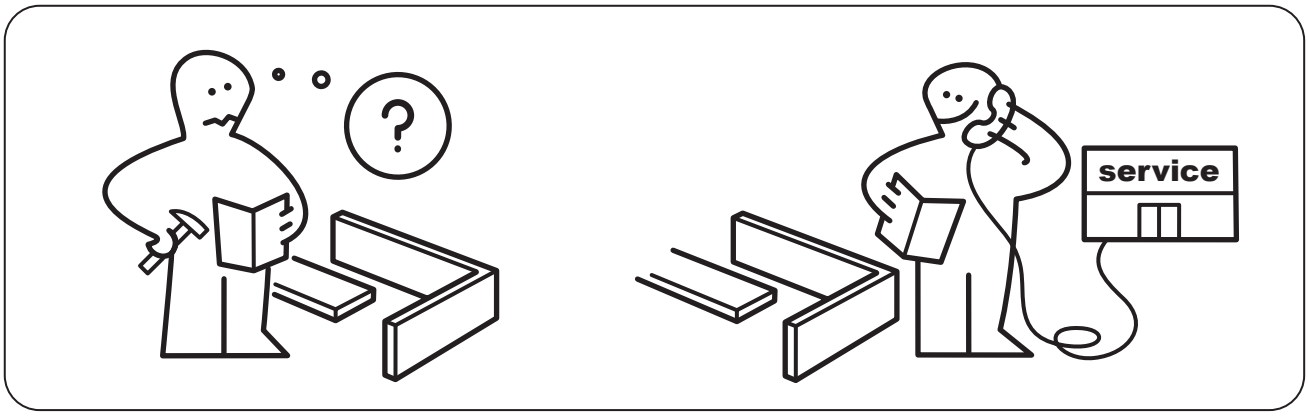

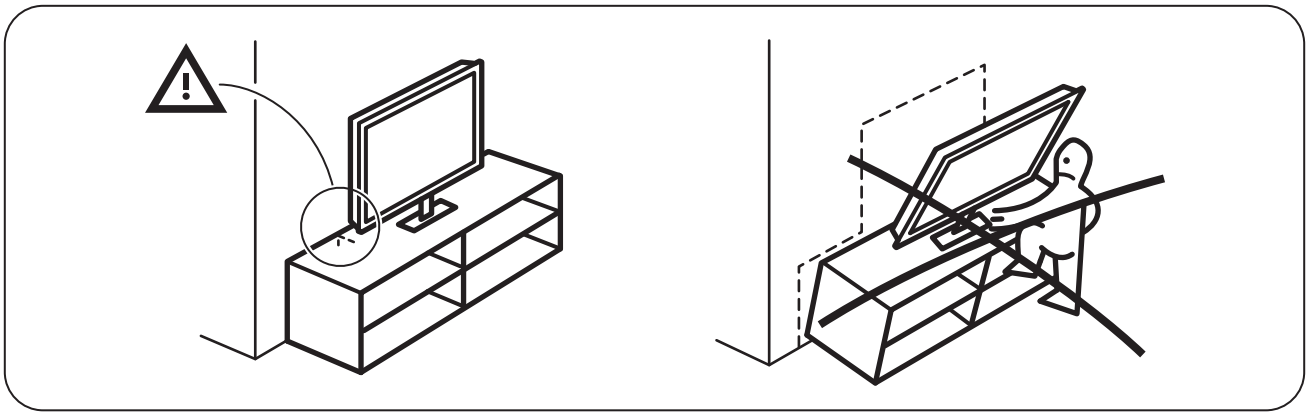

PARTS LIST

NOTICE

Please make sure all the parts are included.If there are parts missing, please feel free to contact our customer service team.
hellovitesse@gmail.com

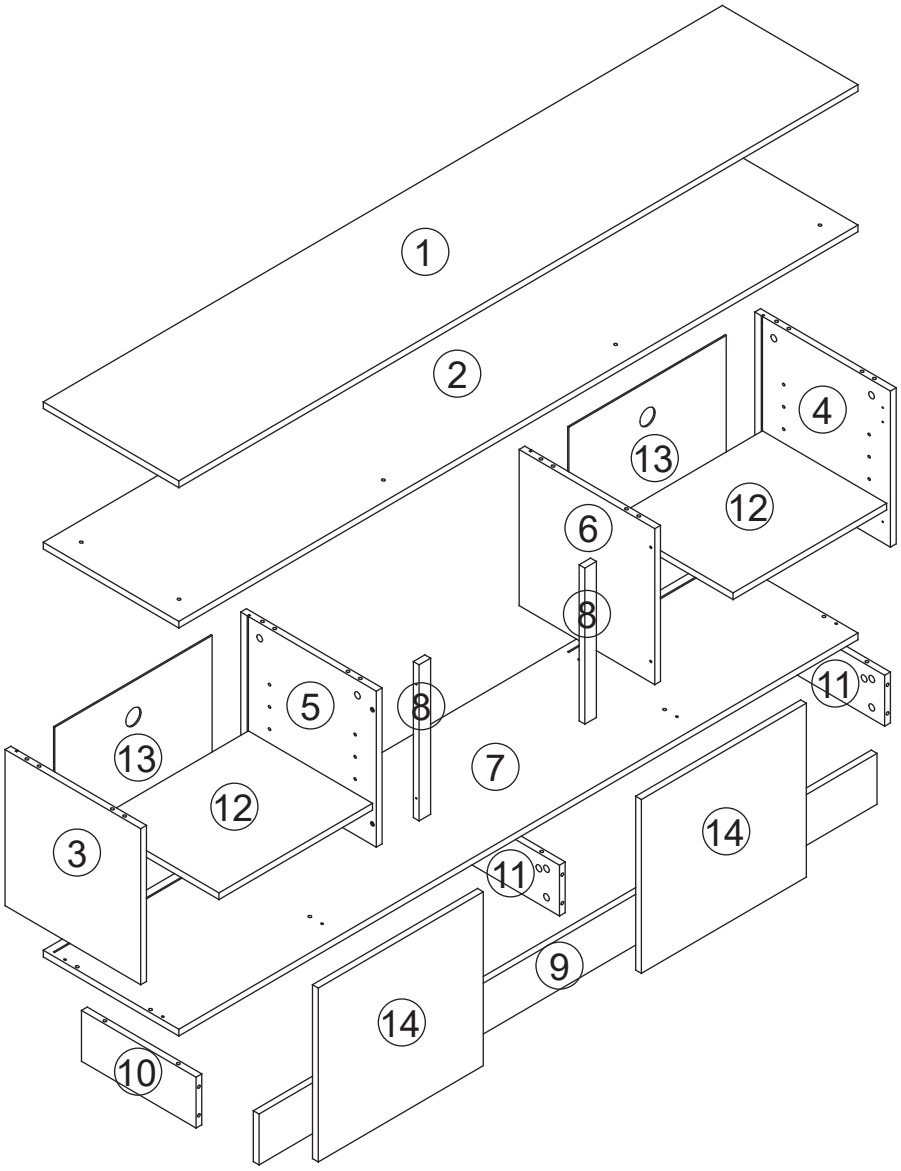

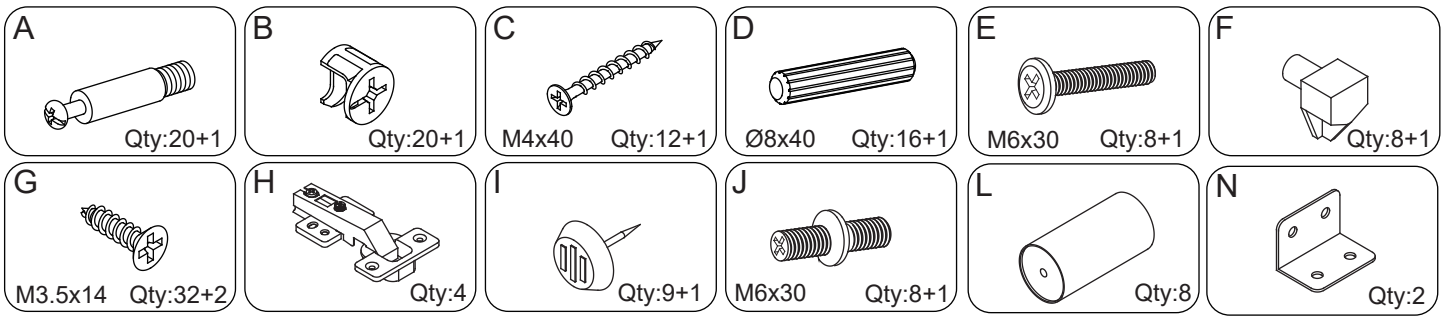

Installation steps

STEP 1

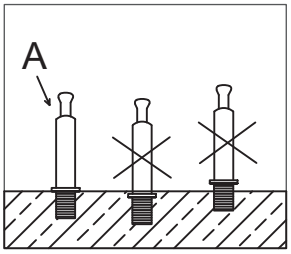

Note: Please ensure that Screw A is fully tightened.

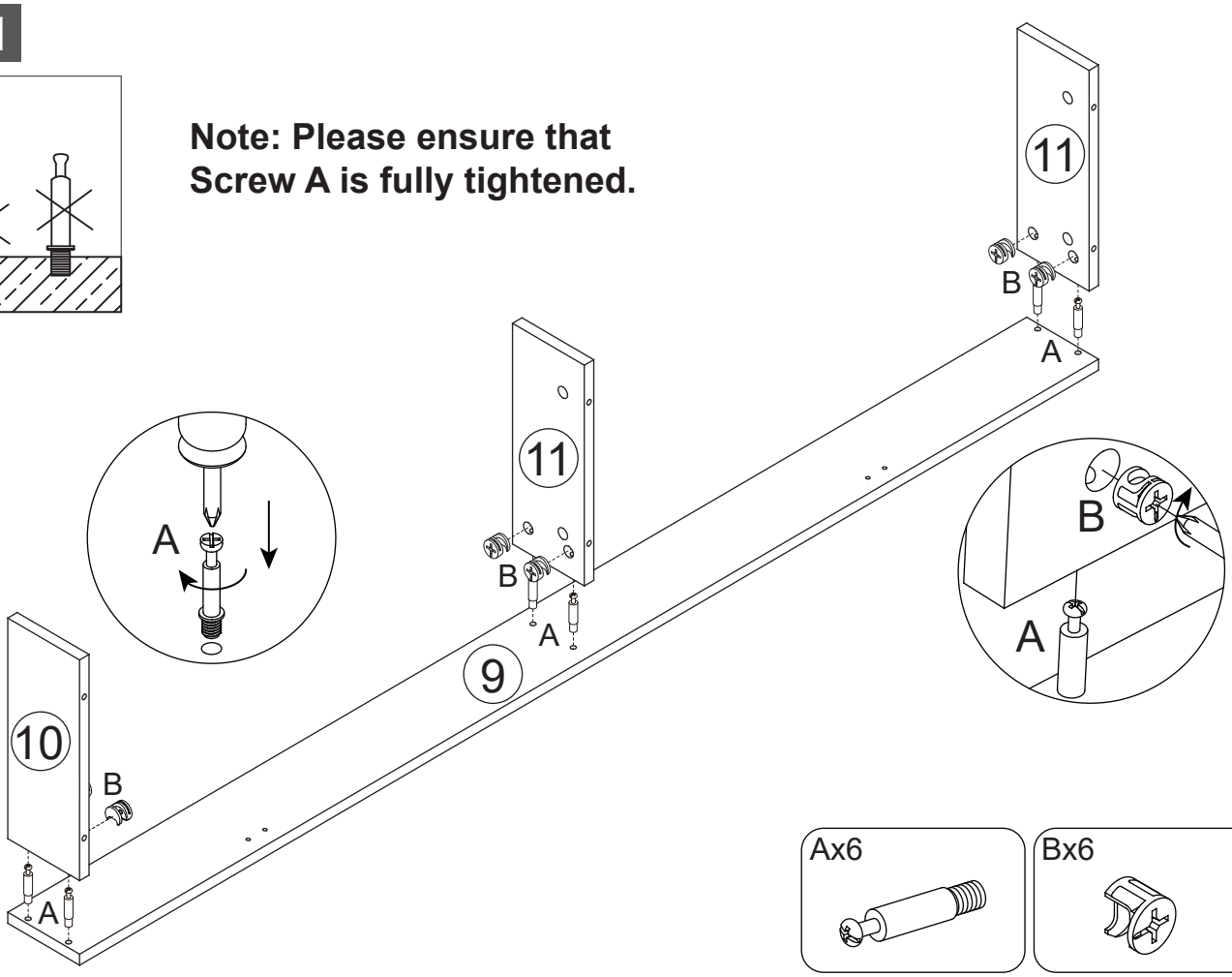

STEP 2

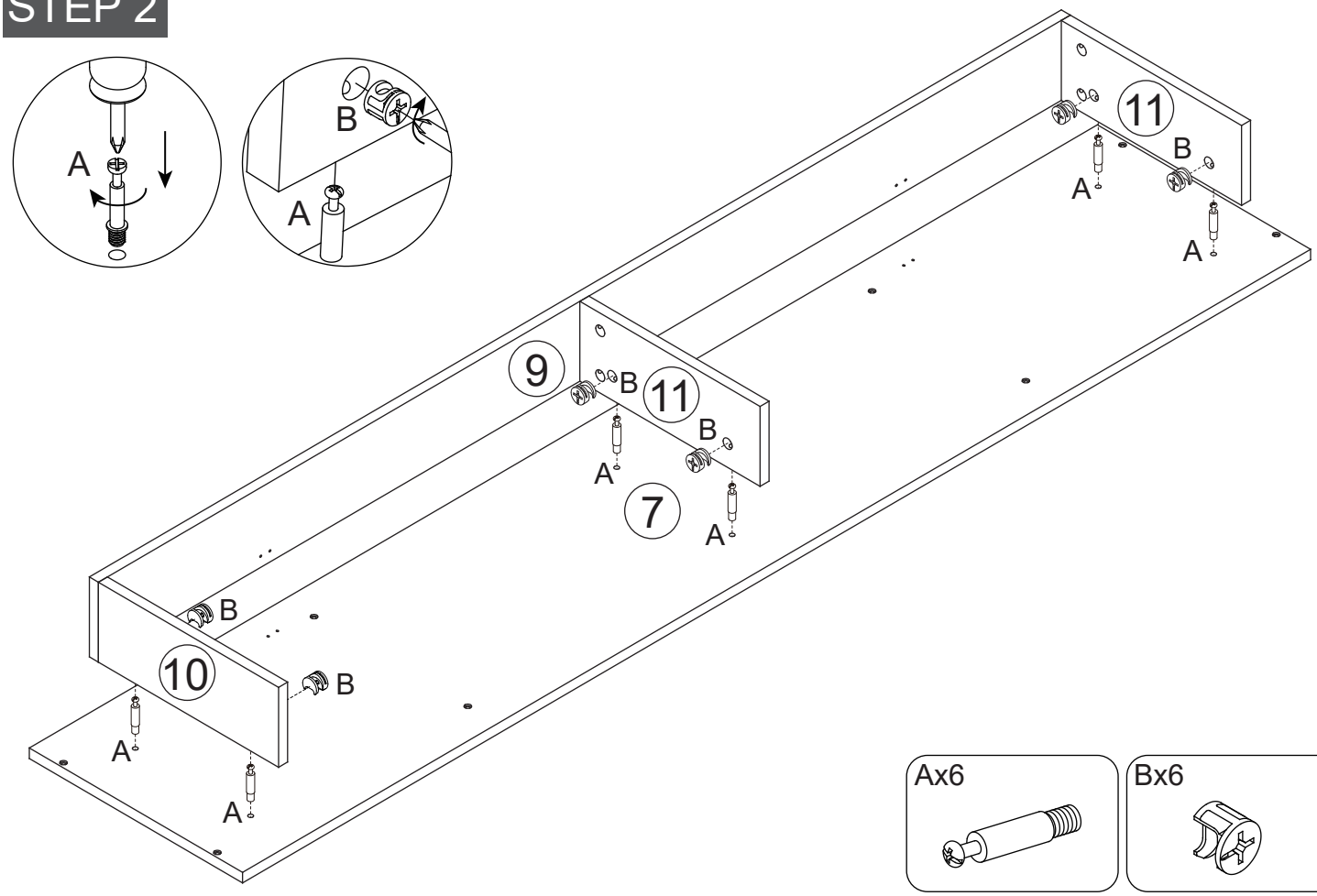

Installation steps

STEP 3

Note: There was a decorative cover for Part I.

The Part I is optional installed, customers can select to ignore the Part M installation, it will not affect daily using.

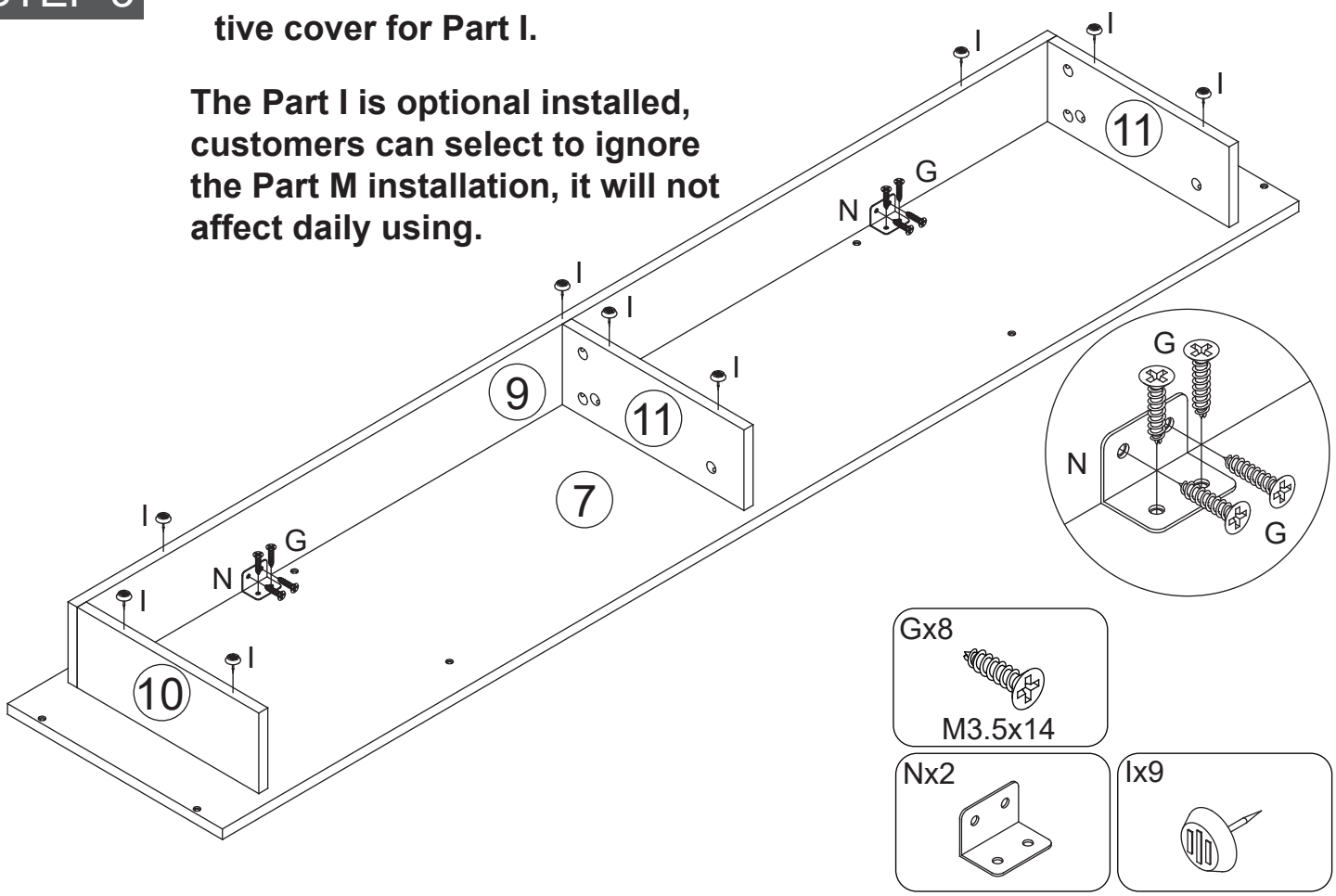

STEP 4

Please install Part D for connecting Panel 4 and Panel 7, then use Part C to tighten them again.

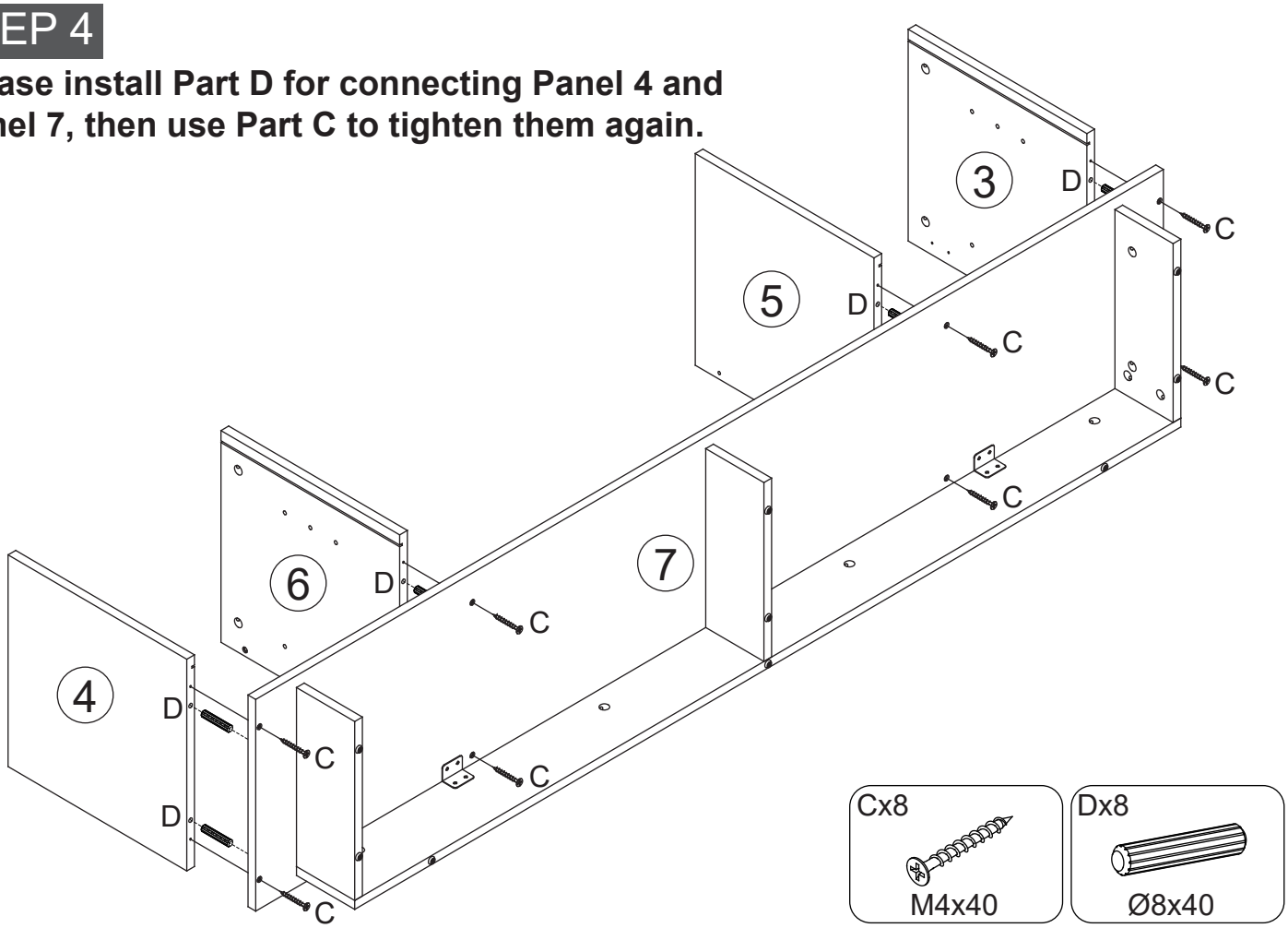

Installation steps

STEP 5

Kindly insert Panel 13 through the reserved indentation.

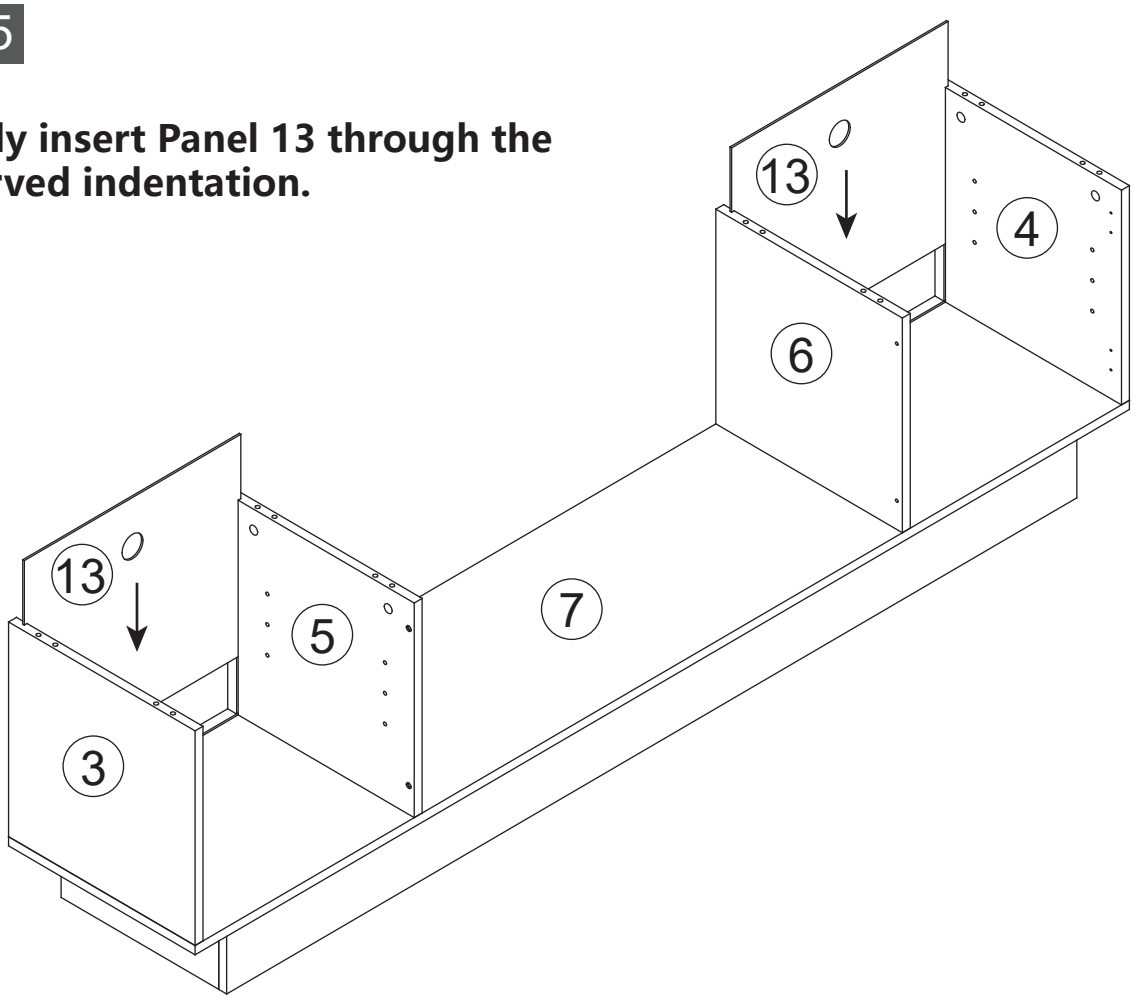

STEP 6

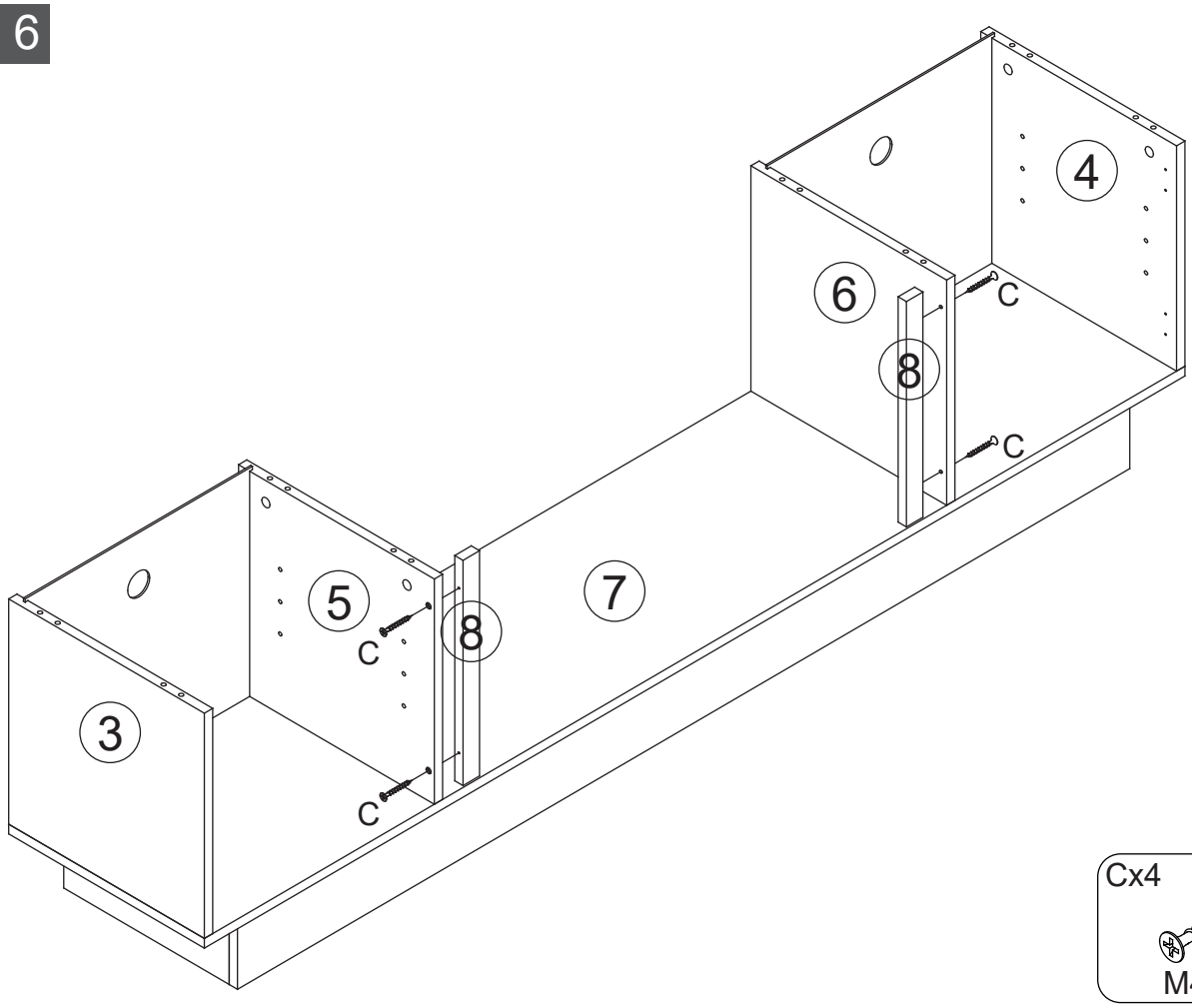

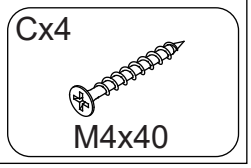

Installation steps

STEP 7

The rotating accessory L is connected to J. During the rotation process, avoid over-tightening—stop as soon as you feel slight resistance.

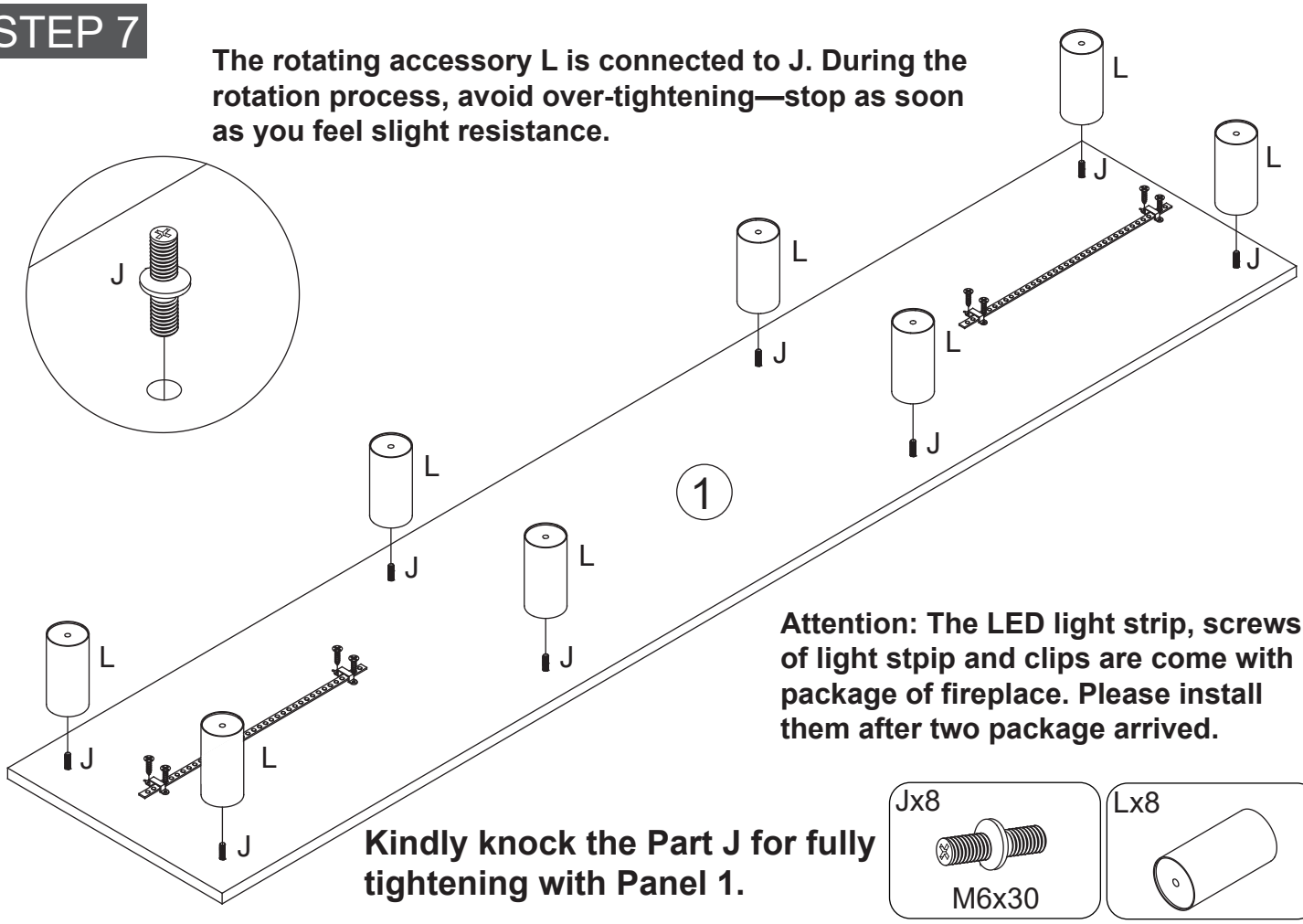

Attention: The LED light strip, screws of light stpip and clips are come with package of fireplace. Please install them after two package arrived.

Kindly knock the Part J for fully tightening with Panel 1.

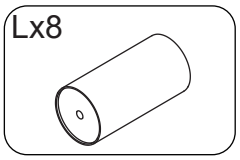

STEP 8

Please note there is a reserved indentation on Panel 2 to help the consumer to recognize direction.

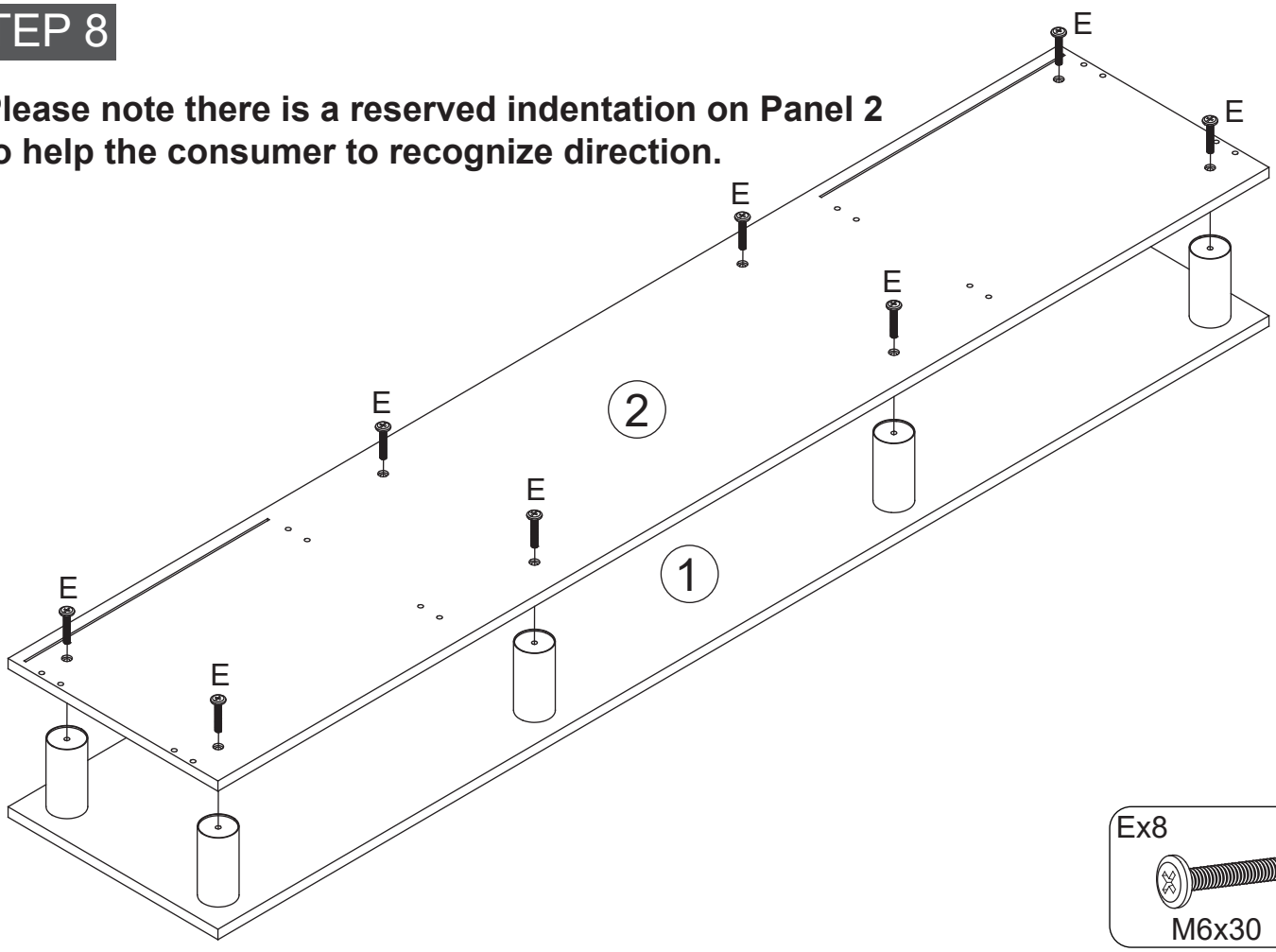

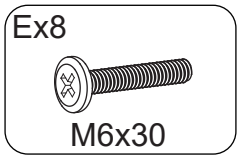

Installation steps

STEP 9

Make sure the sequence of Part A and Part D is correct according to Step 9.

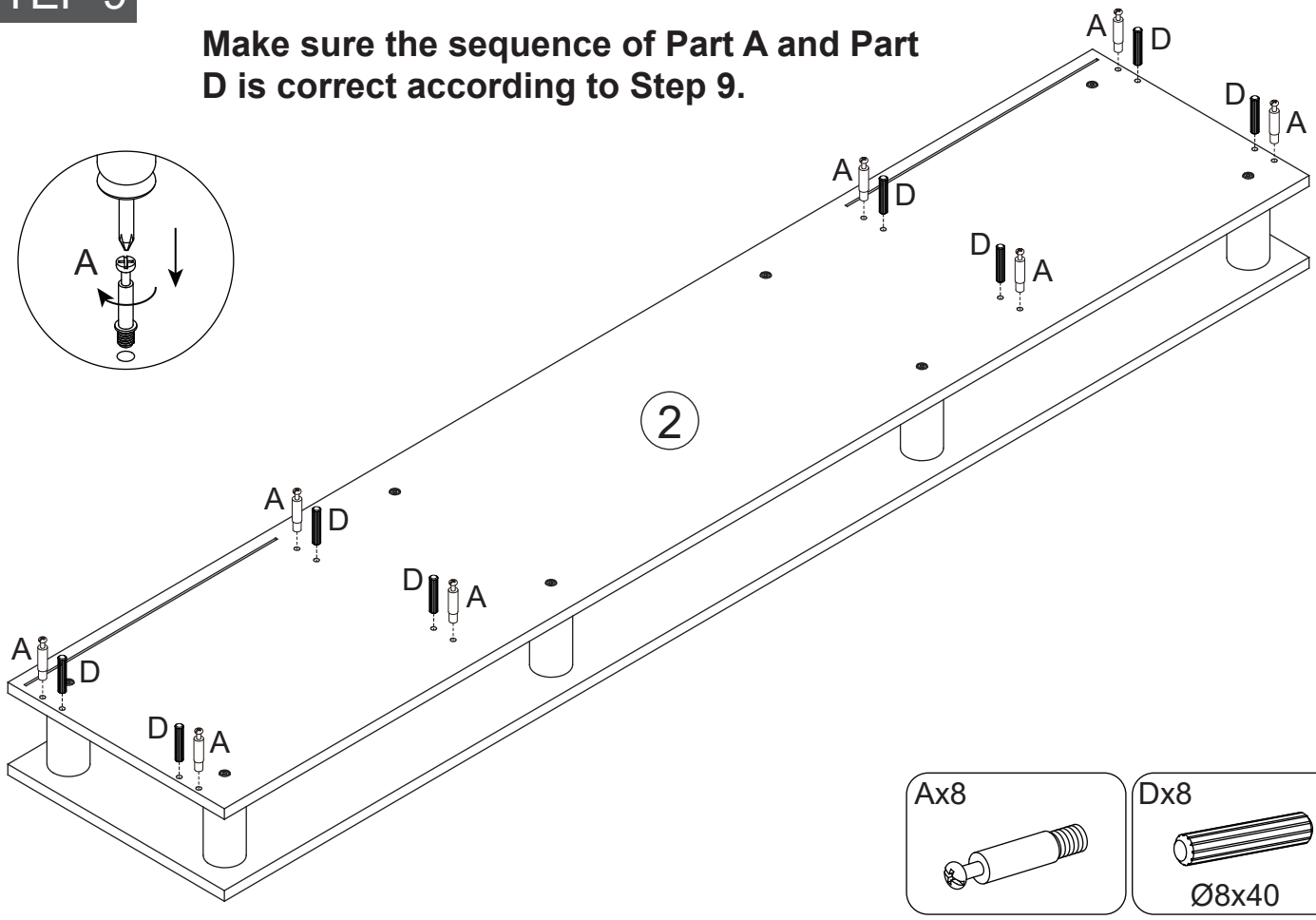

STEP 10

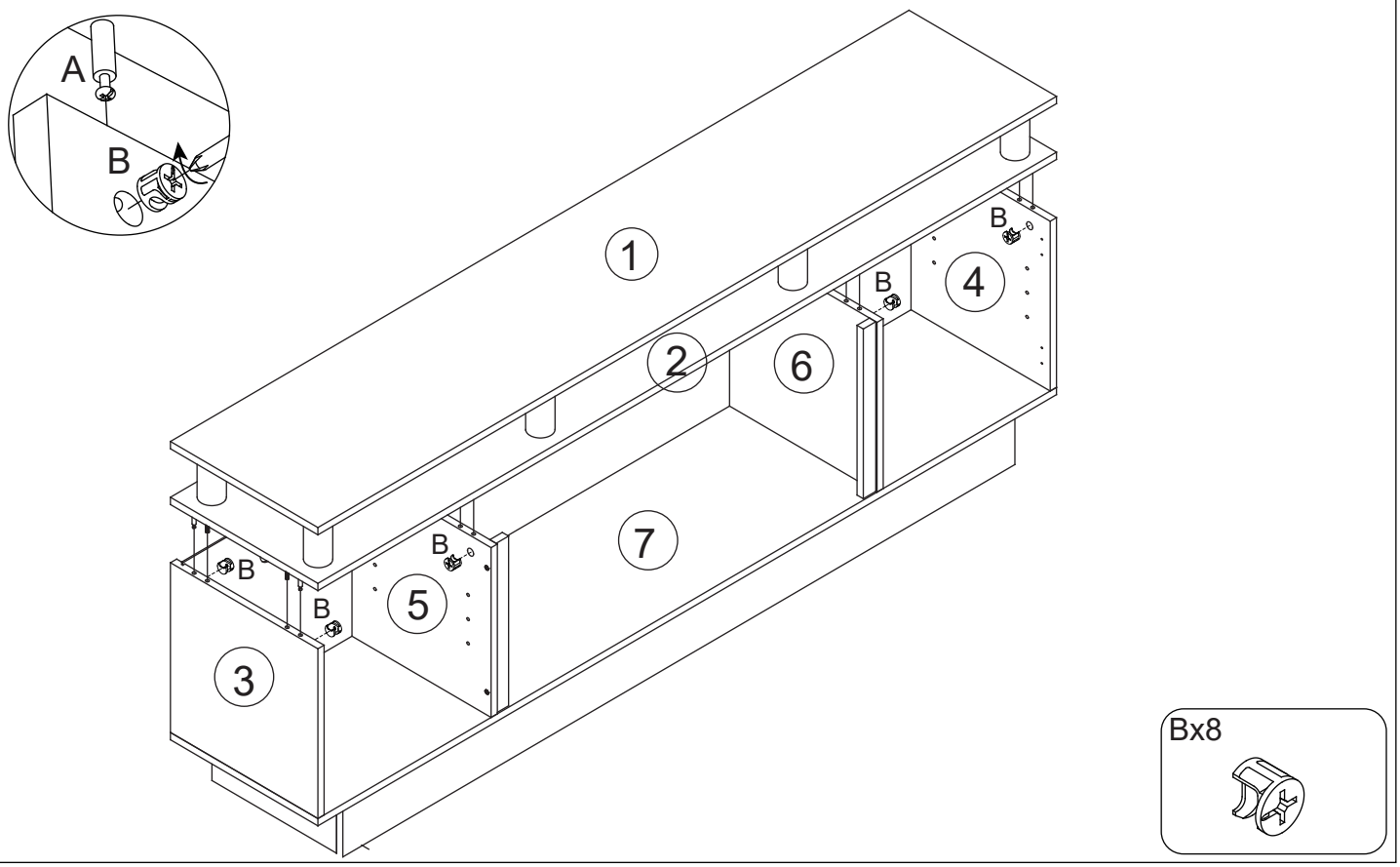

Installation steps

STEP 11

Please install Part F before insert Panel 12. Part F is the holder point for Panel 12.

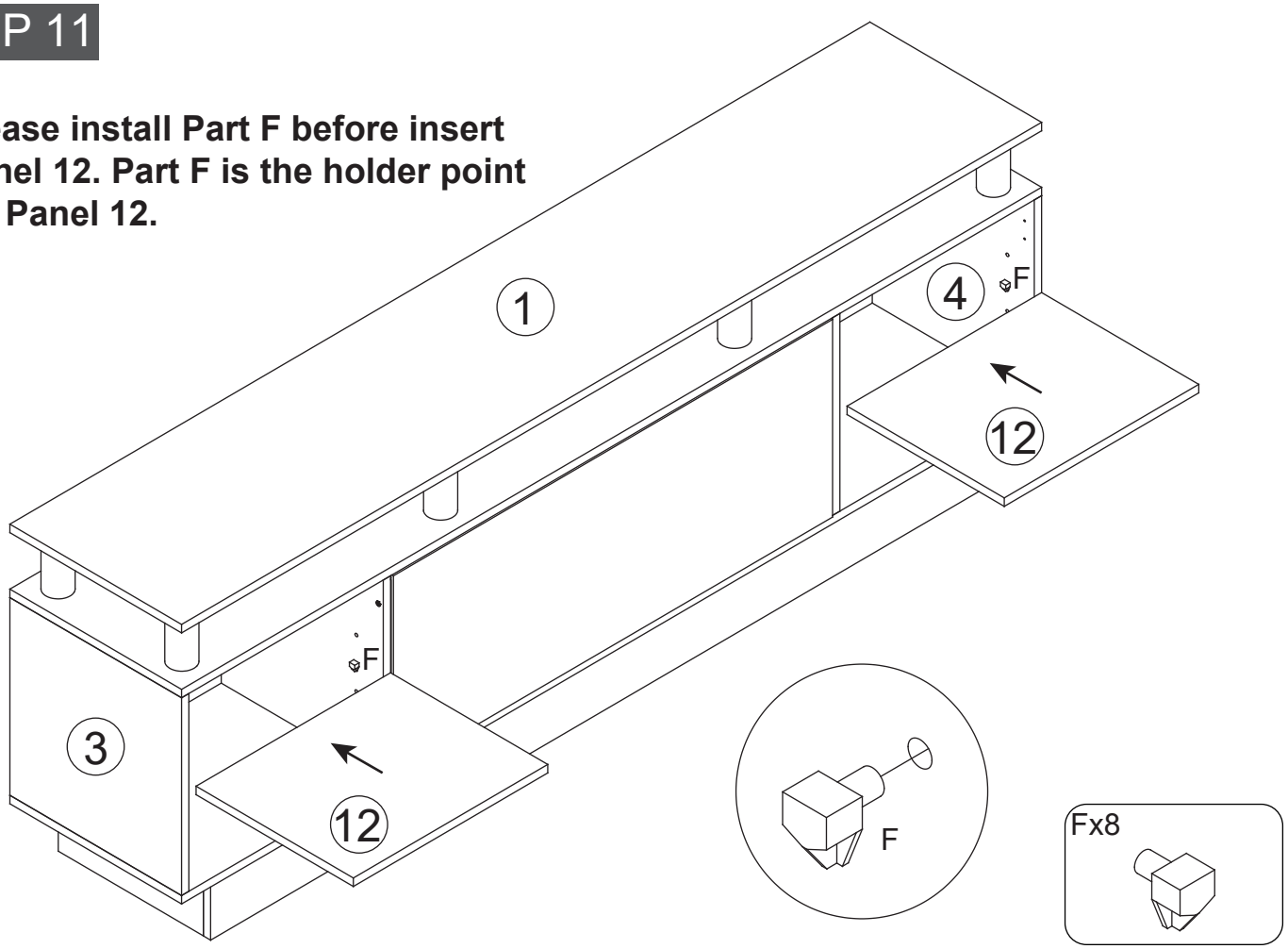

STEP 12

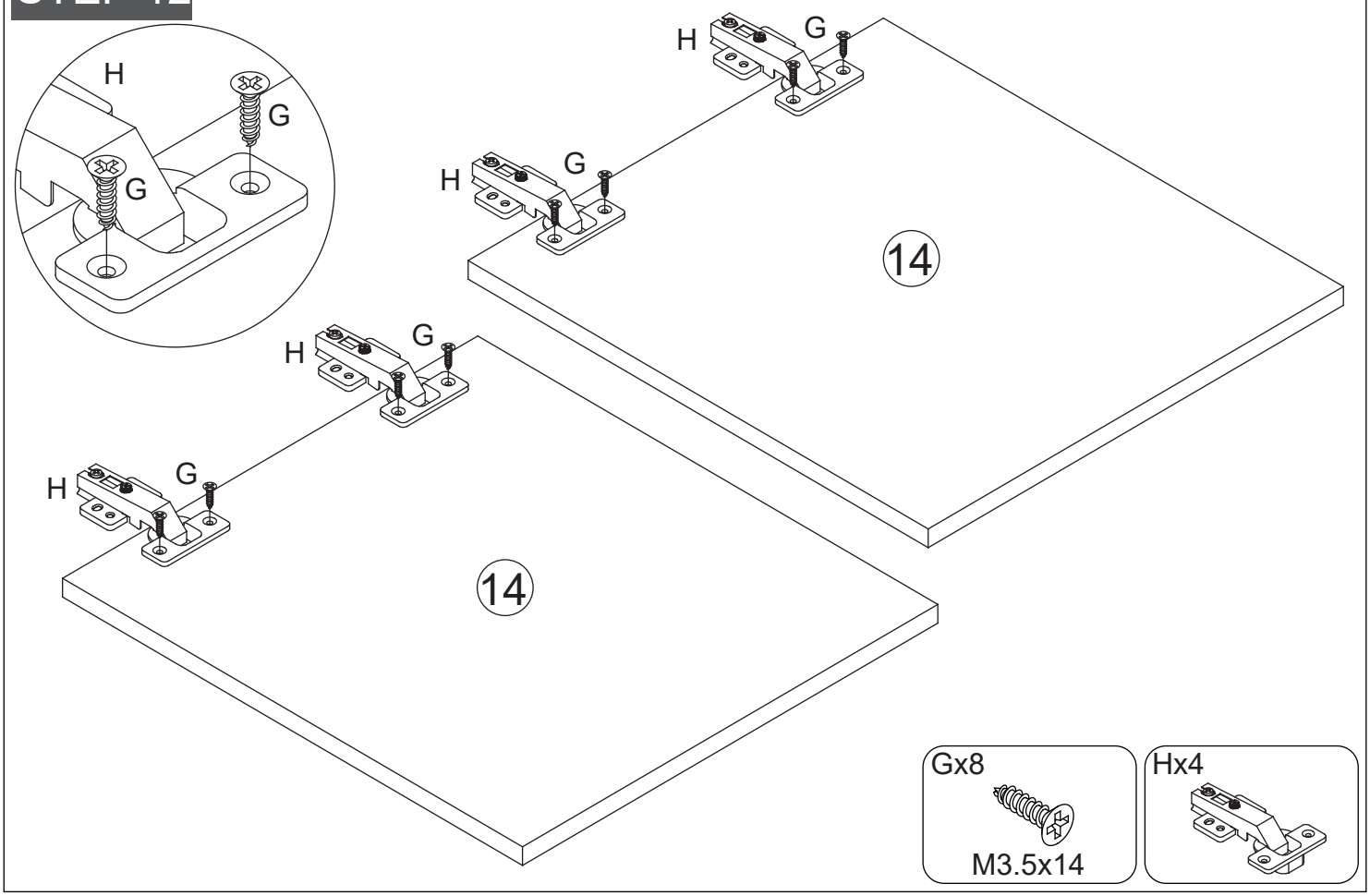

Installation steps

STEP 13

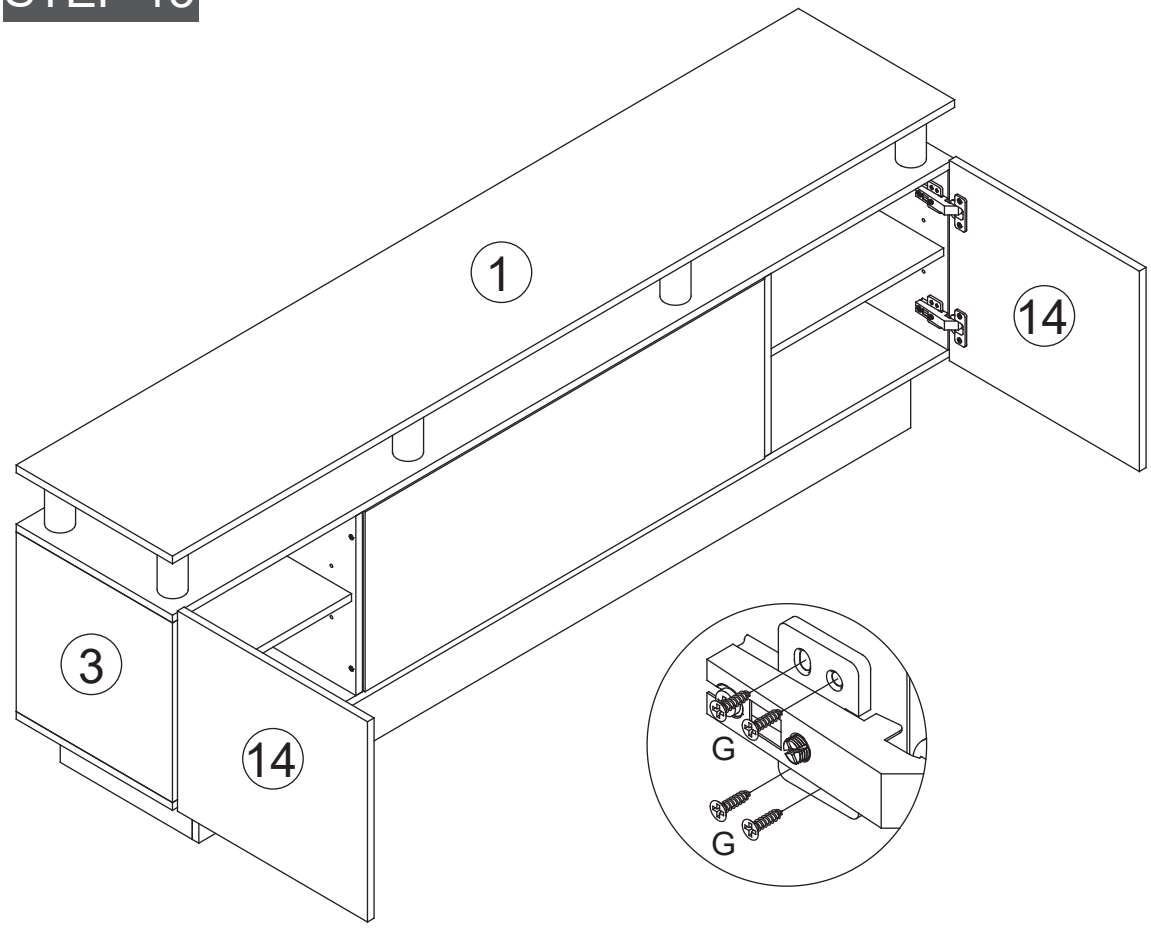

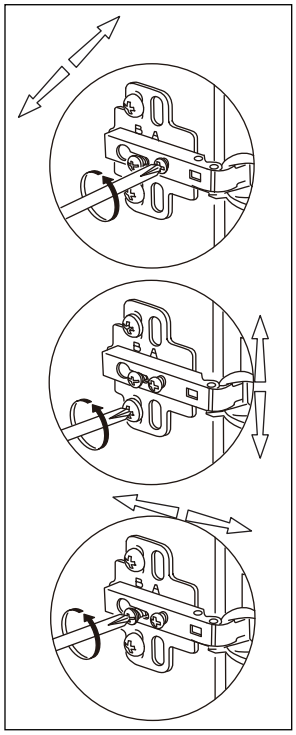

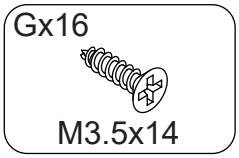

STEP 14

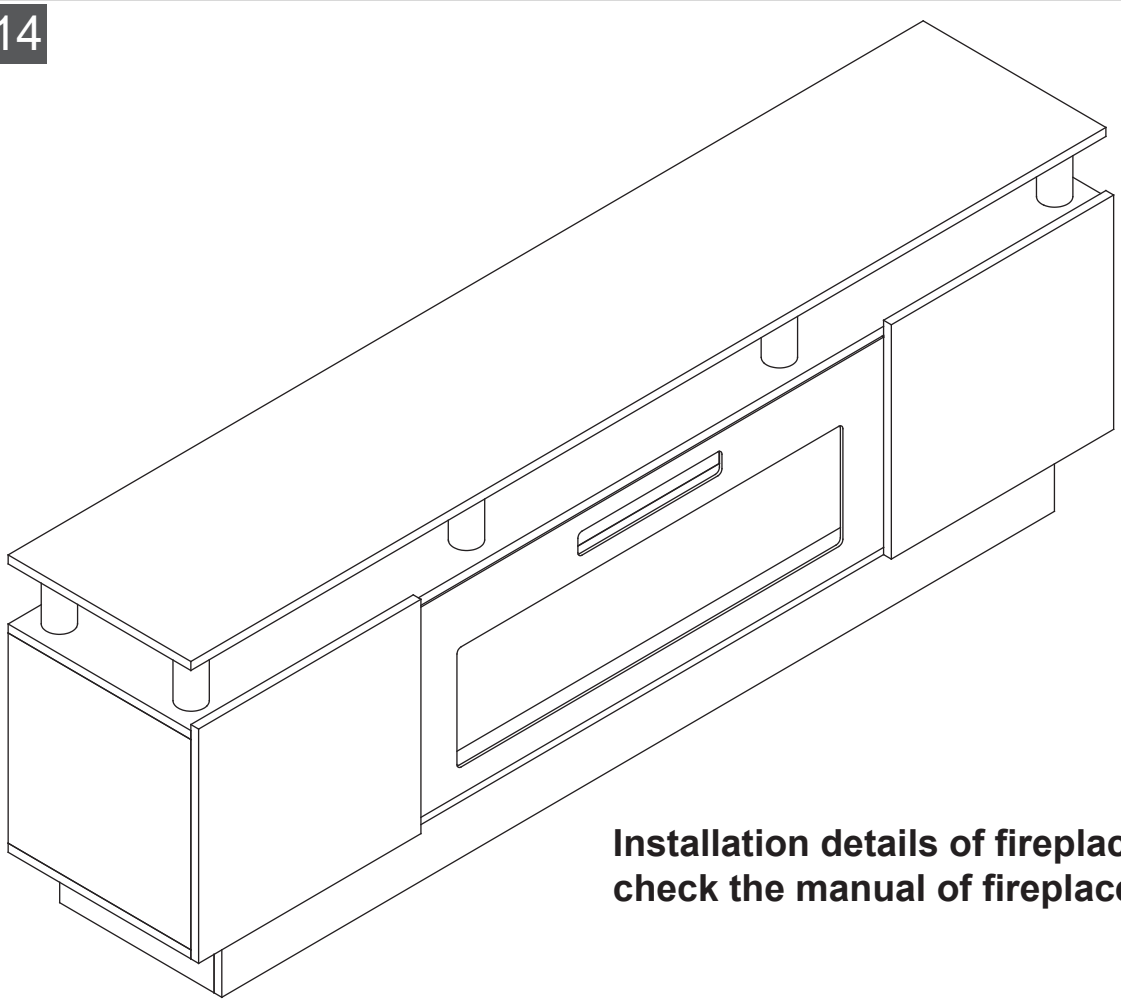

Installation details of fireplace please check the manual of fireplace.

HELP CENTER

WE STAND BEHIND THE QUALITY OF OUR PRODUCT

1. If you have any other issues with your item(s), please feel free to contact us! We will always do our best to come up with a solution that you will be happy with.
2. Please get in touch with our customer service team before returning the item(s).
3. Please do not throw away the original box(es) if you have not finished assembling and confirmed no quality issues.

RETURN POLICY

Length of return period:

You can return the item(s) within 30 days of purchase.
In the meanwhile, everything you purchased from us comes with a one-year warranty.

Who is responsible for the return shipping fee:

We will cover the return shipping fees if:
1. Your item has a manufacturing defect in materials or workmanship. For example, material cracking or screw hole misalignment. We will send you a prepaid shipping label after you send us photos or videos of the defects.
2. Your item has been damaged in transit. For example, metal part is broken or product is damaged. We will send you a prepaid shipping label after you send us photos of the damage.
3. You receive the wrong box(es) due to a warehouse error, We will send you a prepaid shipping label after you send us photos of the item(s), ship ping label(s) and words(SKU) on the outer box(es).

* However, we still hope to work with you for a better solution instead of a return. Please don't hesitate to contact our customer service team.

Customer will cover the return shipping fees if:
1. You don't like the item(s) after receiving the box(es).
2. You no longer need the item(s) but have received the box(es).
3. You buy the item(s) by mistake but have received the box(es).
4. Order/shipment cancellation failed, and you have received the box(es).

Return Request

In order to get a full refund as described in this return policy, all items must be:
1. In a brand new/unused condition. Please provide photos before and after packaging.
2. All accessories and parts must be firmly packed in all original packaging before returning. If your return does not meet these requirements, you may not receive a full refund.

When can I receive a refund?

After you return it using the prepaid shipping label we provided and inform us, the refund will be issued once the package(s) have been returned to our warehouse.

What can I do if the product is damaged after warranty?

We want you to be a happy customer. Please reach out to us via email or text, and we will work on a solution to ensure your satisfaction.

Question about your product? Please do not hesitate to email or text us. We will reply to you within 24-48 hours.

+1(503) 928-7812
hellovitesse@gmail.com
Instagram: vitessegaming
YouTube : vitessegaming

SAVE THESE INSTRUCTIONS