# ASSEMBLY AND INSTALLATION INSTRUCTIONS

**WARNING:TO AVOID RISK OF ELECTRICAL SHOCK, BE SURE TO SHUT OFF POWER WHILE INSTALLING OR SERVICING THIS FIXTURE.**

**NOTES:**

1. Before installing,consult local electrical codes for wiring and grounding requirements.
2. Read and save these instructions.
3. Always switch off the electricity supply and allow to cool for 10 minutes before changing the light bulbs.
4. Min. 90°C supply conductors.consult a qualified electrician to ensure correct branch circuit conductor.

## 6-LIGHT FLUSH MOUNT

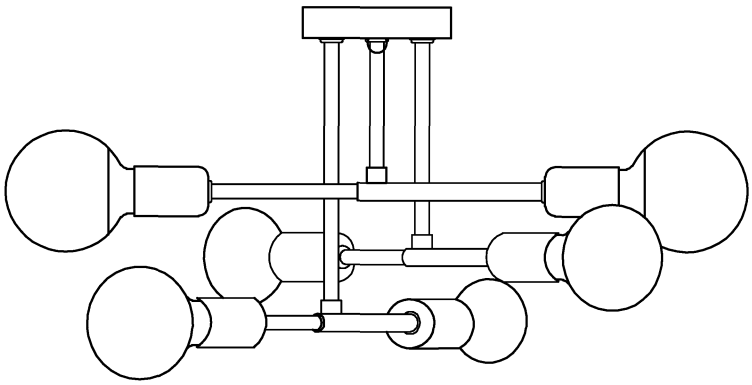

---

### TOOLS REQUIRED


Flathead Screwdriver

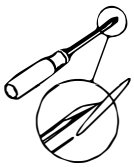
Phillips Screwdriver


Ladder

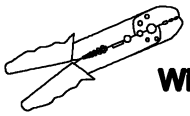
Wire Strippers


Pliers

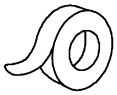
Electrical Tape

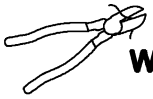
Wire Cutters


Safety Glasses

### PREPARATION

Before beginning assembly of product, make sure all parts are present. Compare parts with package contents list and hardware contents list. If any part is missing or damaged, do not attempt to assemble the product.When the lamp is not installed finish,please don't throw away the package,so as not to leave the parts in the package.

## PART LIST AND HARDWARE LIST

| PIECE | DESCRIPTION | QUANTITY |
|---|---|---|
| A | Mounting Bracket | 1 |
| B | Outlex box screw | 2 |
| C | Lamp arms | 3 |
| D | Center rods | 3 |

| PIECE | DESCRIPTION | QUANTITY |
|---|---|---|
| E | Hex Nut | 2 |
| F | Wire nut | 3 |
| G | Canopy screw | 1 |

## INSTALLATION

1. Attach the mounting bracket(A) to the junction box with outlex box screw(B) then fix it.

2. Assemble the lamp arms(C),then attach them to the center rods(D) and secure them with the hex nuts(E).

3. Attach the supply circuit ground wire(green or bare copper wire) to the fixture ground wire,black to (black) and white to (white)

4. Attach the lamp body to the mounting bracket(A),secure with canopy screw(G).

5. Install six max 60W bulbs (not included) into the socket.

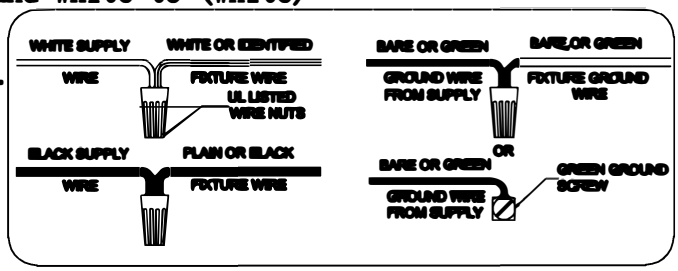


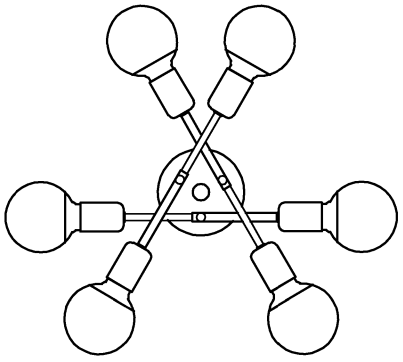

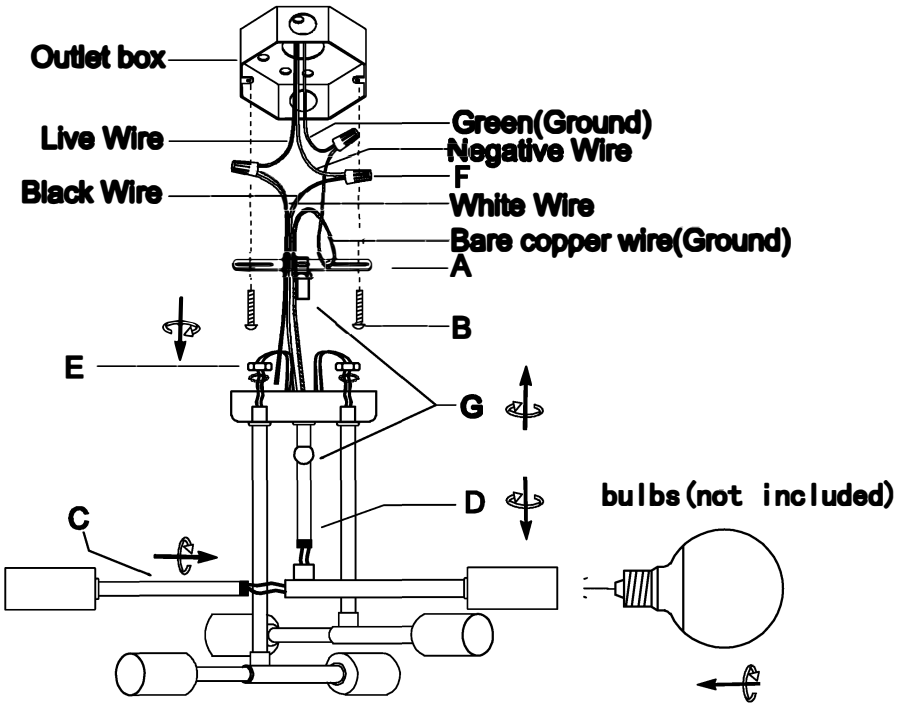


If you have any issues with use this product, please email us.Be sure to include your order number and photos of the issues. This will help us provide you with faster support and solve your problem.