INSTRUCTION MANUAL

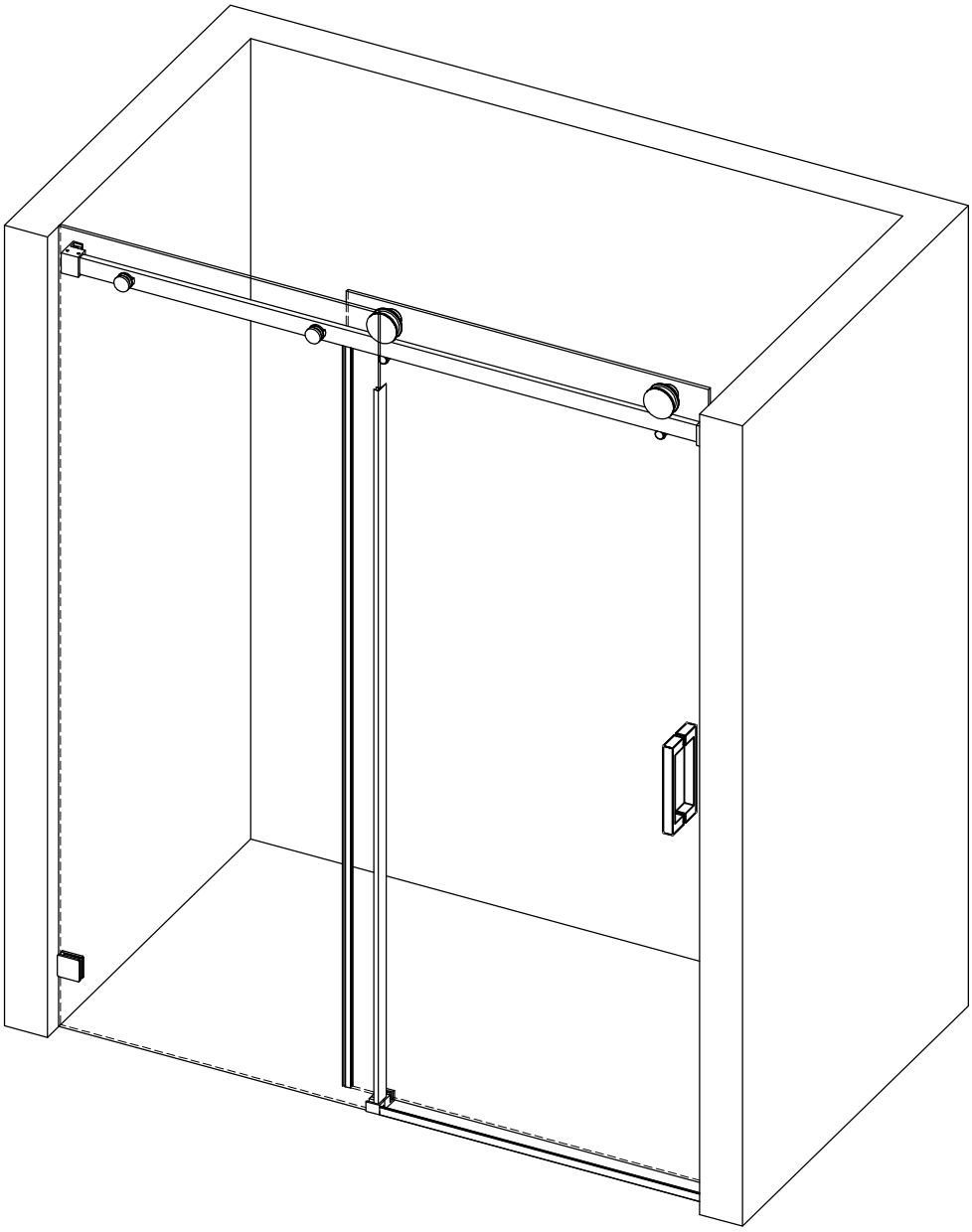

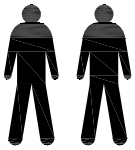

2 PEOPLE REQUIRED

Please keep this manual and product code number for future reference and for ordering replace ment parts if necessary.

GENERAL INSTRUCTIONS

- Read this manual carefully and completely before proceeding.
- It is recommended that you wear safety glasses at all times during the installation.

INSTALLATION OVER CERAMIC TILES

- If your shower door is to be installed over ceramic tiles, the tiles should lay completely under the wall jamb.
- Silicone should be used to seal the gap where the ceramic tiles meet the fixed panel.

NOTICE

- Caulking : no sealant is required inside the shower, unless otherwise stated.
- Some models are equipped with clear sealing gaskets.

CARE FOR YOUR SHOWER DOOR

- Never use scouring powder pads or sharp instruments on metal pieces or glass panels.
  An occasional wiping down with a mild soap diluted in water is all that is needed to keep the panels andmetal parts looking new
- We recommend wiping the glass panels with a squeegee after each use.

Tools Required

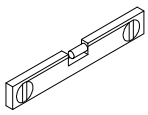 Spirit level	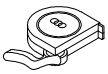 Tape measure	 Power drill	 Drill Bits	 Silicone Gun
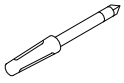 Screw driver	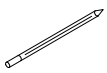 Pencil	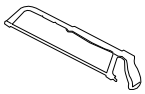 Hacksaw	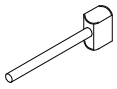 Rubber hammer	 Safety glasses

Product specifications are subject to change without notice

Detailed Diagram of Shower Enclosure Components

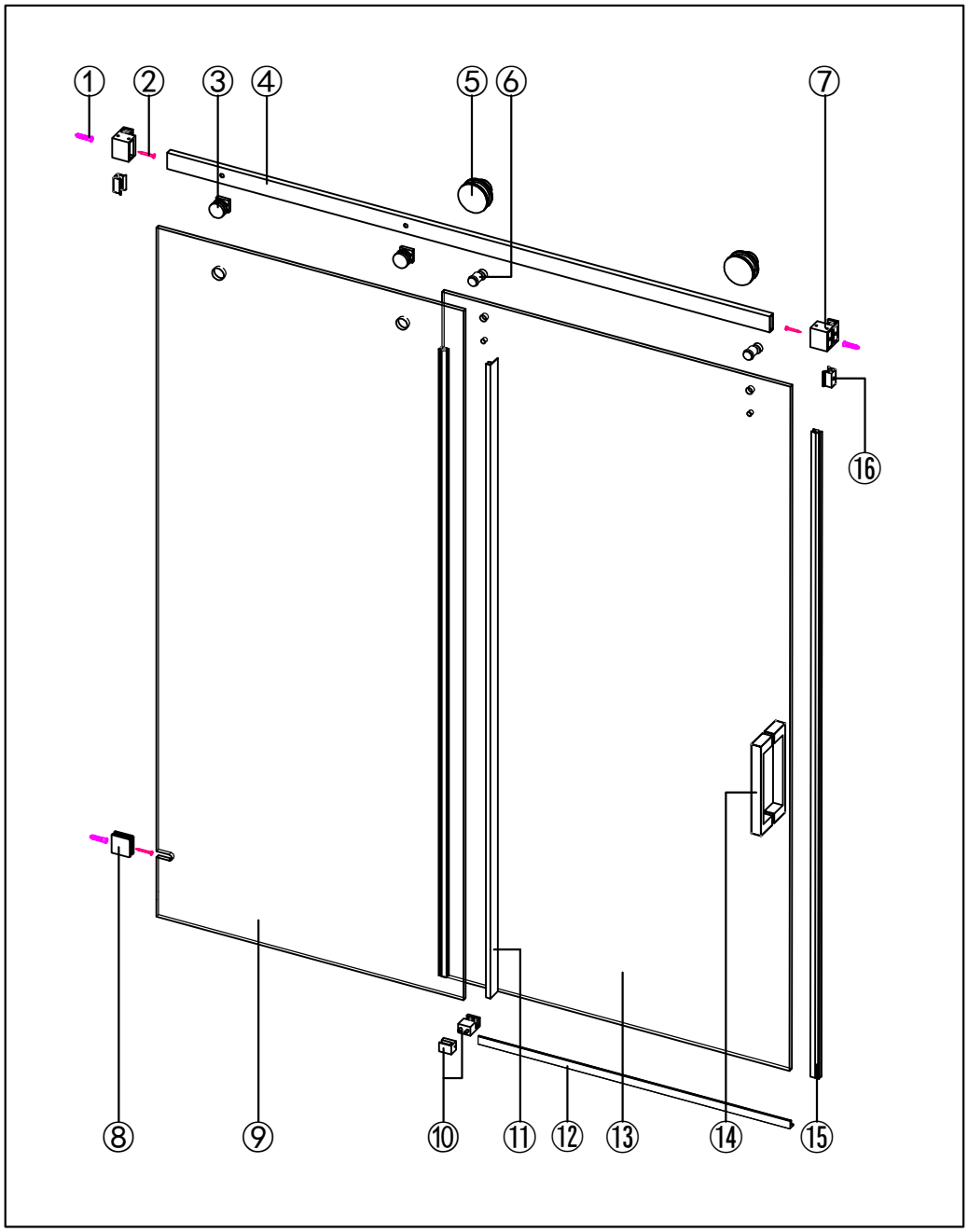

NO.	Name	Picture	Qty		NO.	Name	Picture	Qty
1	8mm Wall Plug		3		9	Fixed Panel		1
2	Screw ST5x40		3		10	Guide Block		1
3	Glass Fastener		2		11	Fixed Panel Seal		1
4	Guide Rail		1		12	Anti-splash Threshold		1
5	Roller		2		13	Sliding Door		1
6	Anti-jumping Knob		2		14	Handle		1
7	Wall Bracket		2		15	Door Seal		2
8	Wall Mount Bracket		1		16	Anti Collision Block		2

①

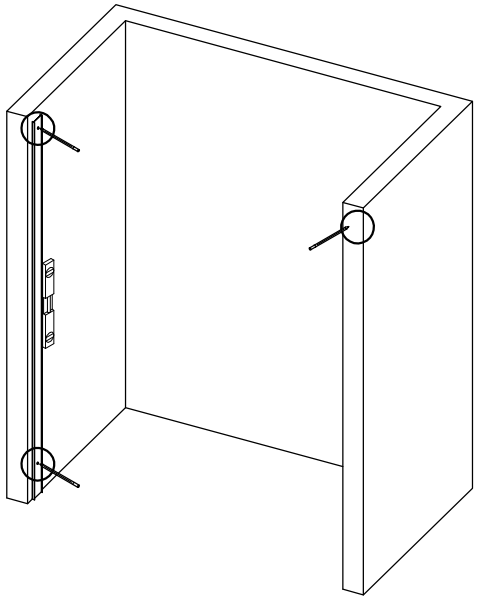

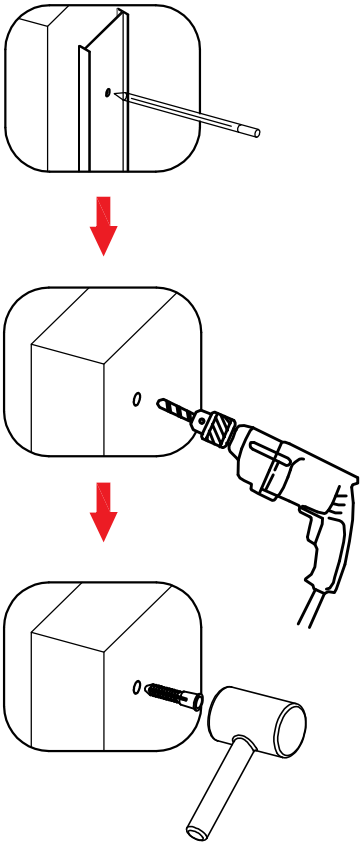

②

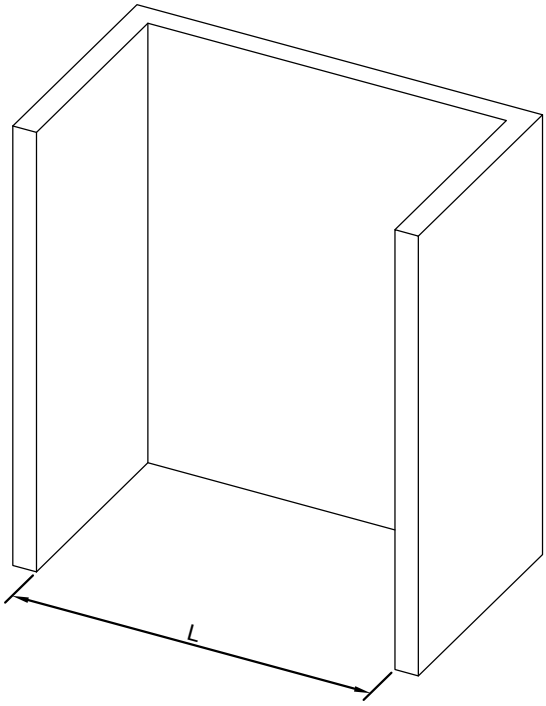

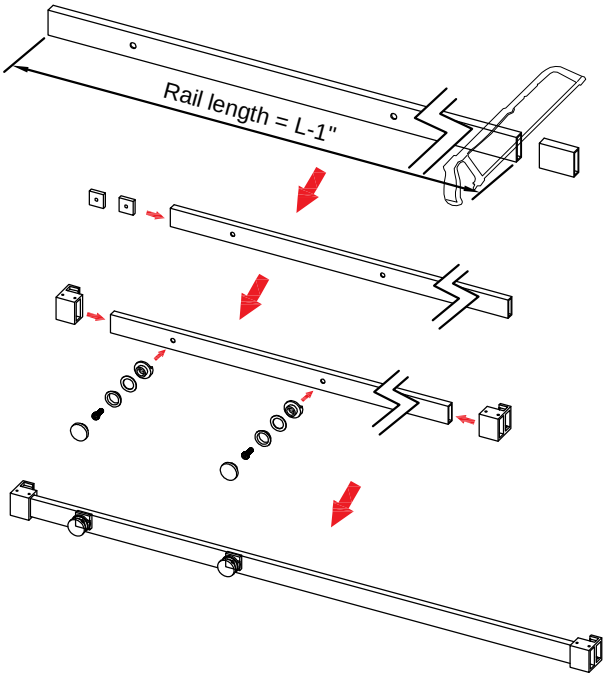

③

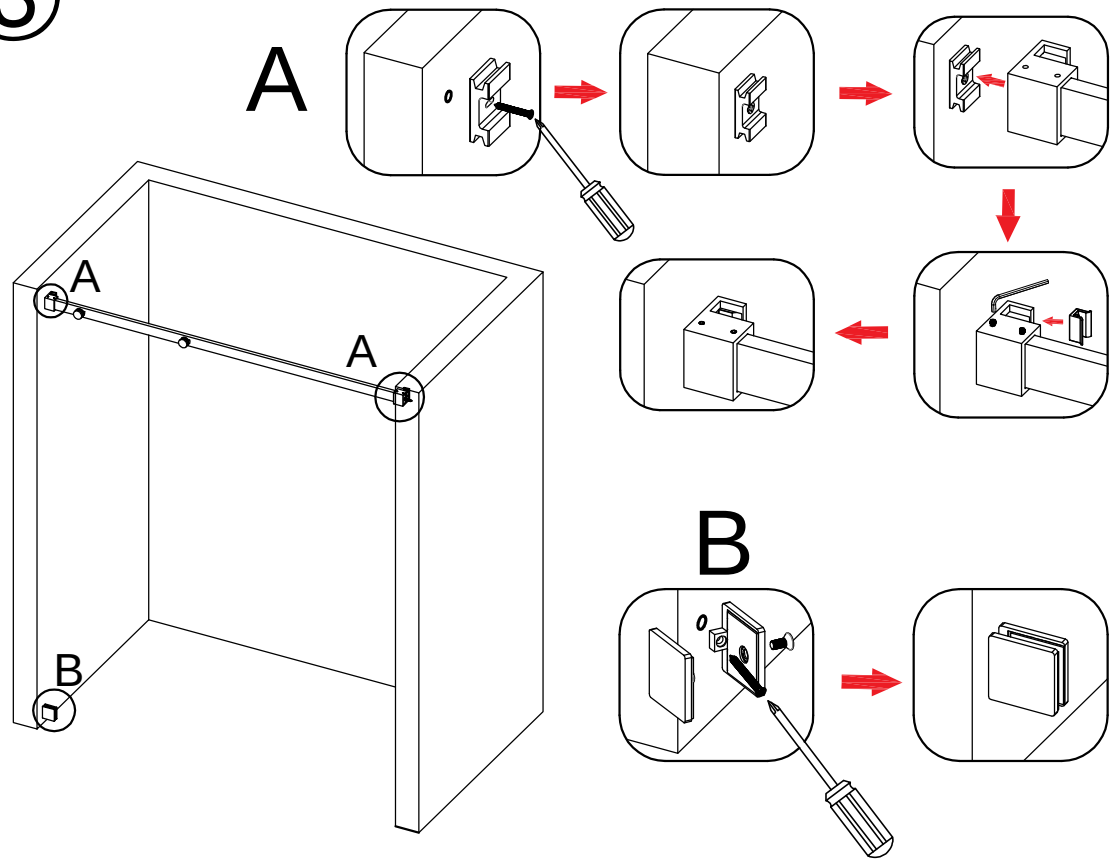

④

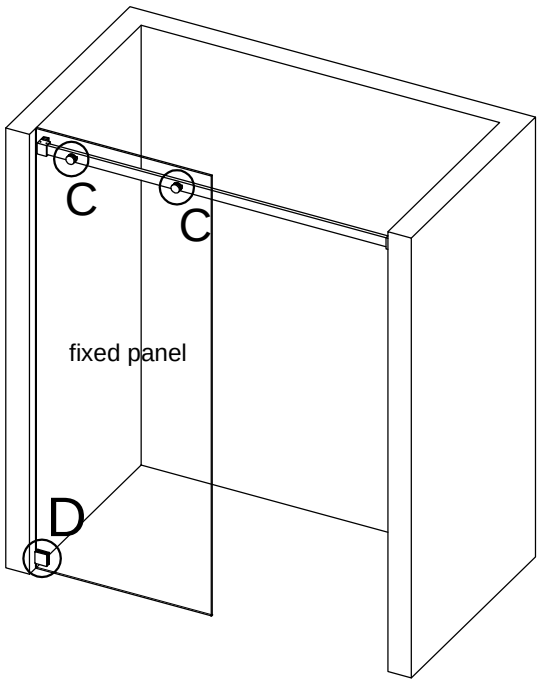

C

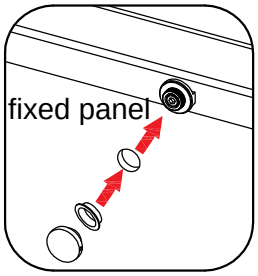

D

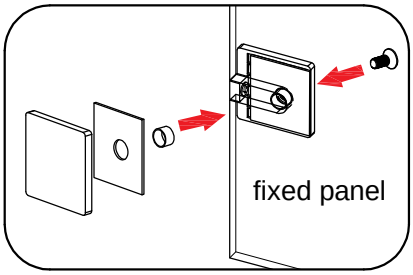

5

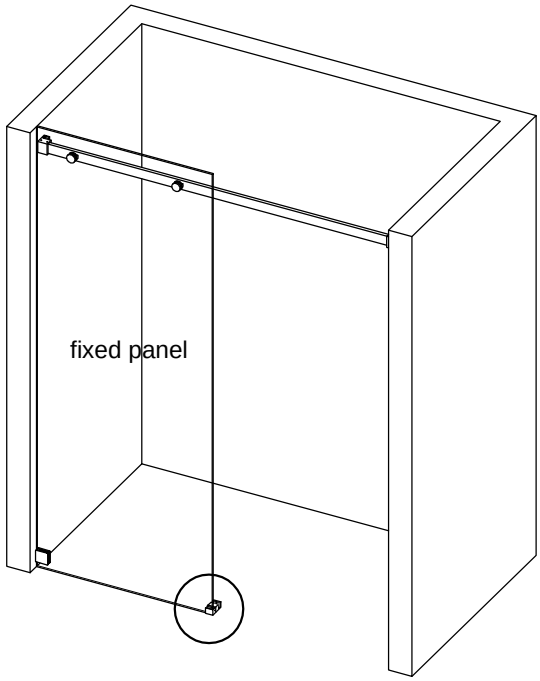

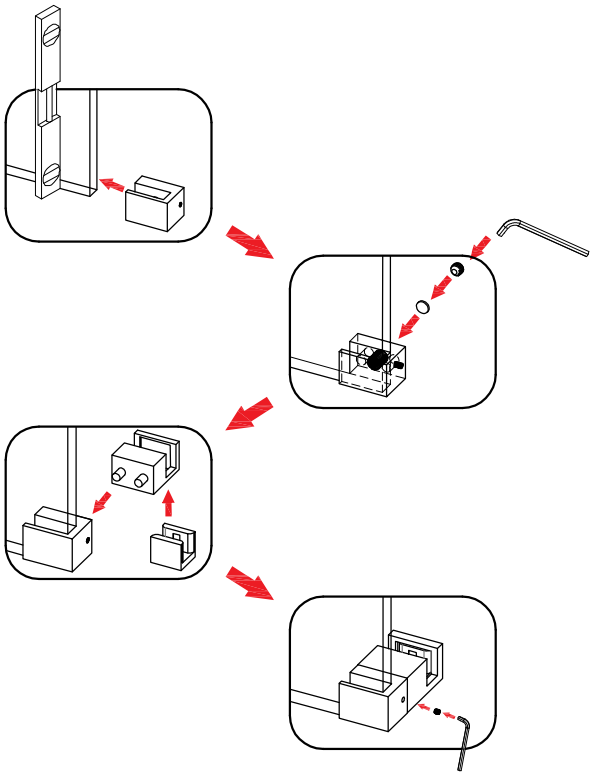

6

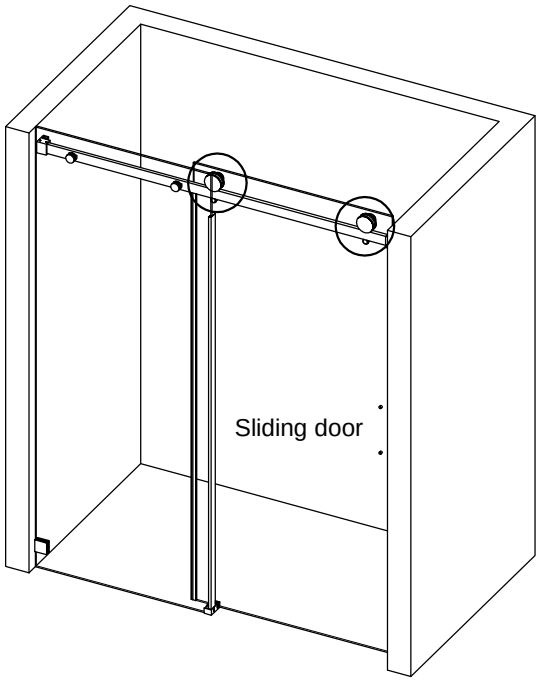

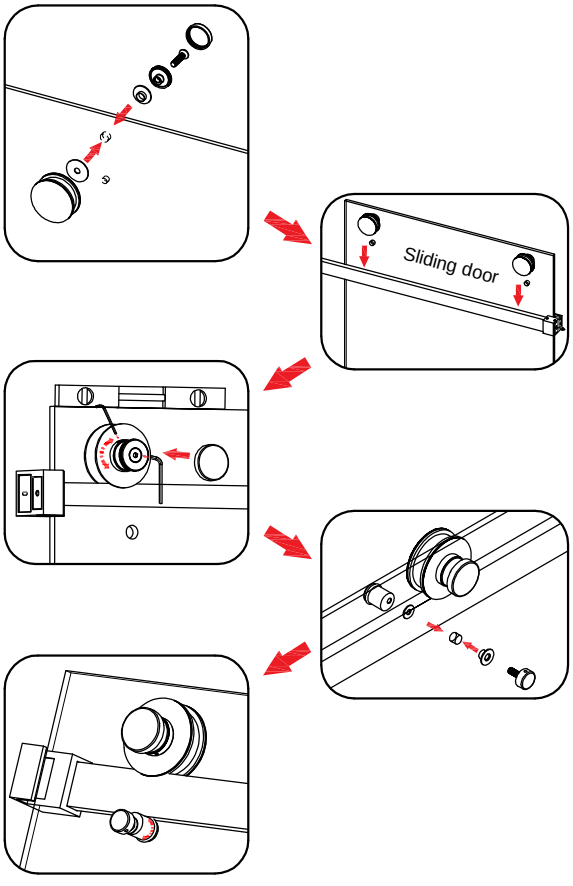

⑦

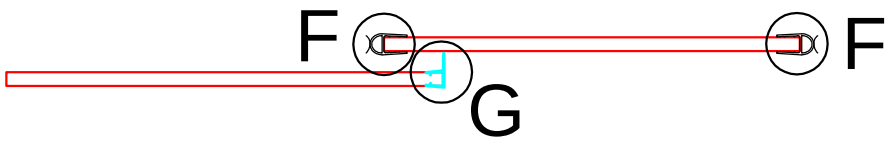

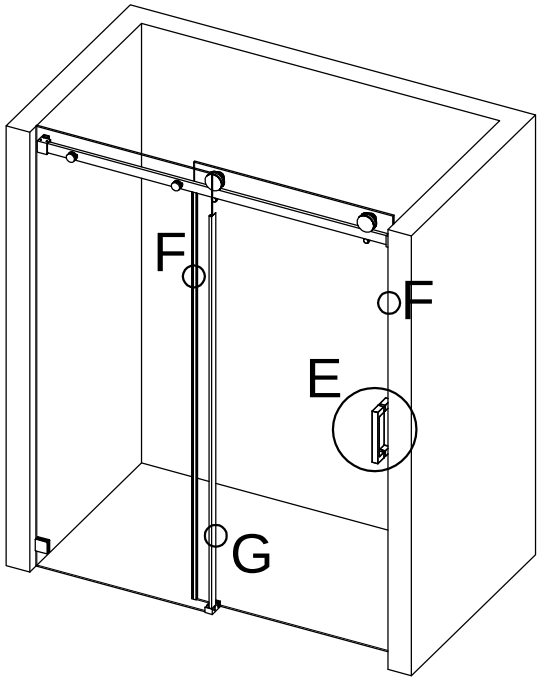

E

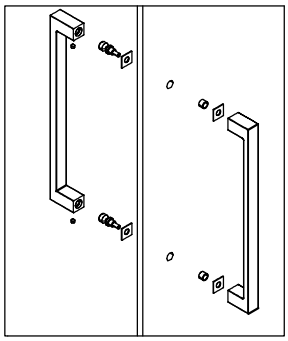

⑧

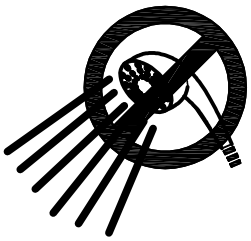

24 Hours

