Installation instructions

Installation sequence diagram

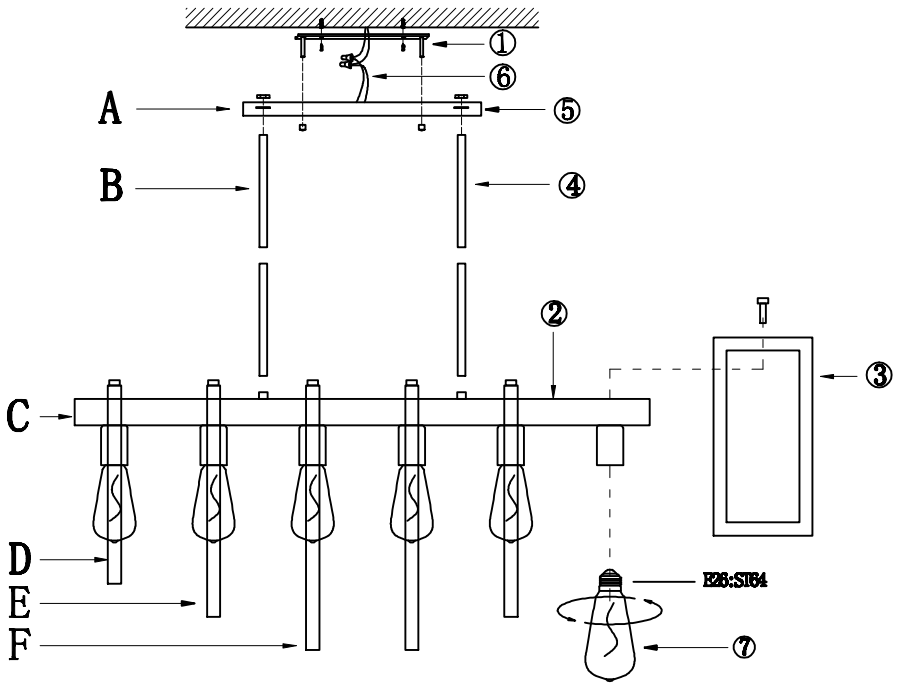

Please complete the assembly in sequence:

① ② ③ ④ ⑤ ⑥ ⑦

assembly parts list

Serial Number	picture	Accessory Name	quantity
A	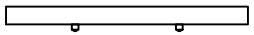	canopy	1 PCS
B	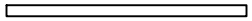	boom	4 PCS
C	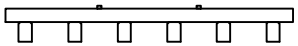	Metal lamp holder	1 PCS
D		Metal Box A	2 PCS
E	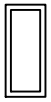	Metal Box B	2 PCS
F	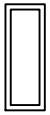	Metal Box C	2 PCS