Please read the manual before using the product. The manual and carton contain important information, please keep them properly for later references. If failure to follow the instruction in the manual, it might be dangerous for your child.
In order to improve the product and quality, we may change the parts of structure, appearance, packing method, assembly method and function of the product without any notice. When there is any difference between the manual and the product, please subject to the actual product. We are sorry for any inconvenience.

Hollicy

The assembly manual of battery operated car

Model:SX3658

Executive standard:
EN71-1
EN71-2
EN71-3
EN62115
ASTM F963



⚠ WARNING:

Products should be assembled by an adult. Protective equipment should be worn. Not to be used in traffic. Not suitable for children under 3 years. Choking hazard- small parts. In unassembled state, contains potentially hazardous small parts. Please keep out of the reach of small children. Pay attention to the potential hazards of using the toy in areas other than private grounds.

PARTS LIST

PARTS NAME	PICTURE	QTY	PARTS NAME	PICTURE	QTY
Car body		1PC	Steering wheel		1PC
Non-driving wheel		2PCS 4PCS (optional)	Driving wheel		2PCS 4PCS (optional)
Motor		2PCS 4PCS (optional)	Rear axle		1PC 2PCS(optional) 3PCS(optional)
Trailer	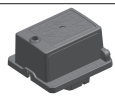	0PC (optional) 1PC (optional) 2PCS (optional)	Trailer connection parts	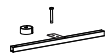	1PC
Trailer handrail		1PC (optional) 2PCS (optional)	Charger		1PC
Horn		1PC	User manual		1PC
Support frame		2PCS	Wheel cover		4PCS 6PCS (optional)
Plastic wrench		2PCS	Hardware package	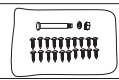	1PC

Disclaimer:

The pictures in this instruction are for assembly reference only. Please refer to the actual product.

WARNING:

This product is not the vehicle for transportation, it should be used under adult guidance. Parents should ensure that children have taken the safety measures before use.

The toy should be used with caution since skill is required to avoid falls or collisions causing injury to the user or third partys.

This toy should be used with caution since skill is required to avoid falls or collisions causing injury to the user or third parties.

PRODUCT SPECIFICATIONS

Battery	6V-4.5AH/12V-7AH/12V-10AH/12V-14AH
Main material	PP
Suitable age	37-95 Months
Weight limit	60kg
Product size	(940+497+497)X390X510mm
Speed	3-5KM/H
Runtime	1-2 hours after charging 8-12 hours, based on ride on conditions
Charger	Input AC 110-240V Output DC 6V-500mA 12V-1000mA
Fuse	Auto-reset fuse

Parent-child function (optional)

Put the seat inside the trailer, child can sit on it, turn over the seat, parent can seat and play with child together.

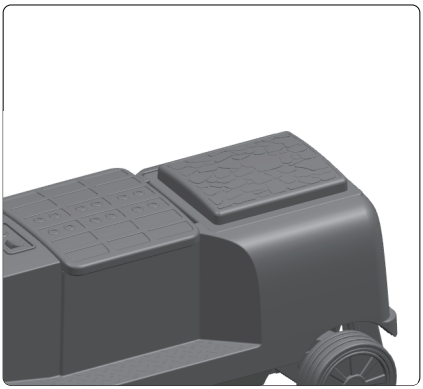

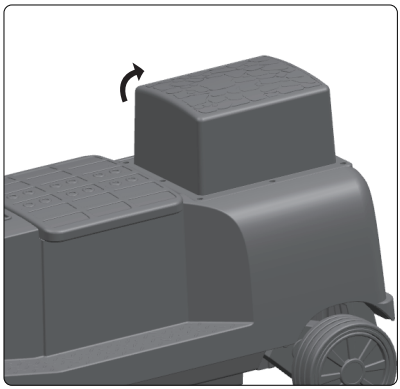

Extra battery (Optional)

The extra battery is optional. You can remove the trailer cover to add an extra battery. When the battery under the locomotive is flat, it can be replaced with this extra battery.

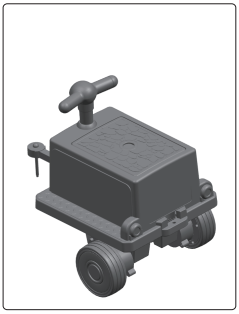

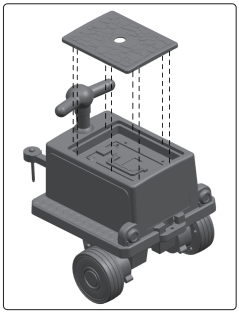

Rapid Maintenance

Loosen the screws under the car body, remove the cover, you can replace the receiver, horn and other accessories quickly.



Assembly instruction

Car assembling should be done by the adults.
Take care of small parts. To avoid choking hazard, keep children away while assembling. Children under 36 months are prohibited to use.
Please count all the parts carefully before assembling and dispose the plastic bag properly. To avoid choking hazard, children are not allowed to play with the bag.

Note: the iron part is locked at the bottom of the car, unscrew and remove it before installation.

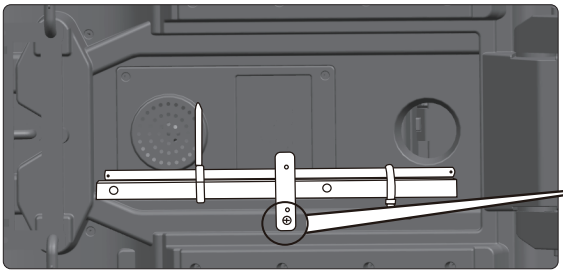

Unscrew the screw with a tool

1. Front wheel assembly

Flip the car body over. Using the plastic wrench, loosen two lock nuts from the front axle, then remove two M8 washers. Keep them aside for later use. You do not need to remove two M12 washers from front axle. Insert the non-driving wheels along with the M8 washers into the front axle, using the plastic wrench, secure the lock nuts. Whilst applying pressure, lock the wheel covers.

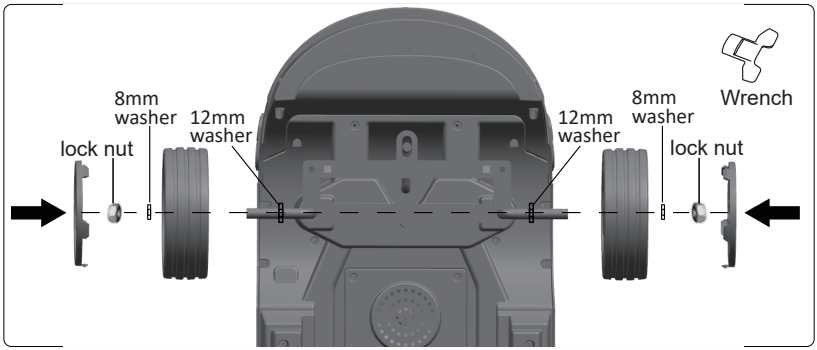

2. Rear wheel assembly

A.Using the plastic wrench, loosen two lock nuts from the rear axle, then remove two M8 washers. Keep them aside for later use.

B.Insert the rear axle into the motors and car body. Check if the rear axles is positioned at the center of the car, ensure the lengths extending out on both sides of the rear axle are equal.

C.Insert the driving wheels along with the M8 washers into the rear axle, using the plastic wrench, secure the lock nuts. Whilst applying pressure, lock the wheel covers.

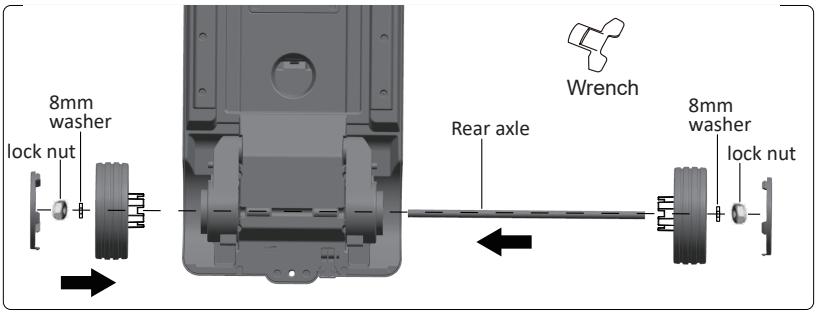

3.Support frame assembly

Attach the support frame to the correct position, using the screwdriver, secure them with the screws.

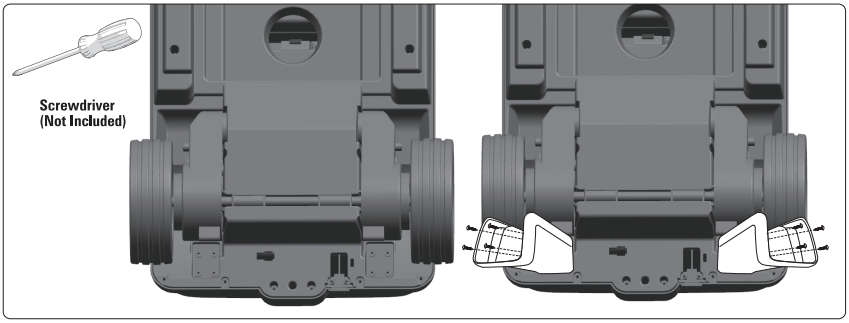

4.Horn and steering wheel assembly

Inser the horn into the groove on the car body and push it into place.

Using a screwdriver, remove a screw and a nut from steering wheel . Connect the cable plugs from the steering wheel and the car body. Insert the cables into the hole, insert the steering wheel into the steering axle, match the holes and insert the nut, using the screwdriver, secure it with the screw.

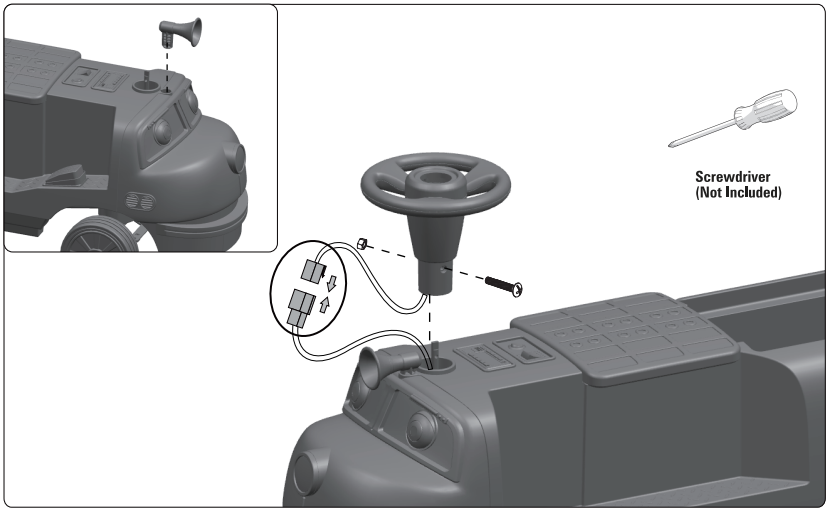

5.Battery connection

Battery is located under the seat of the locomotives.Lift the rear seat out,using the screwdriver, loosen the screw behind the seat, press the snap-fit and open the seat. Insert the fuse into the socket under the seat to establish a connection with the battery. Then reinstall the seat.

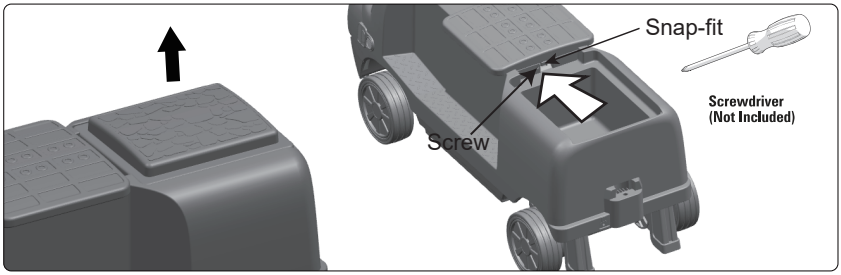

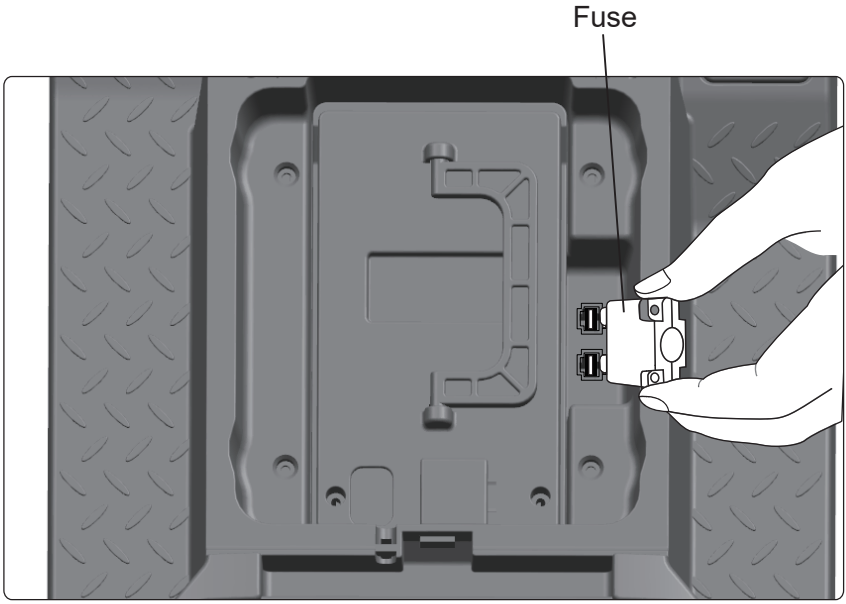

Attention: The following trailer is the optional specification, please assemble as the type you purchased.

6. Trailer assembly

A.Using the wrench, remove the lock nuts, the 8mm washers, axle sleeves and the 12mm washers from rear axle on both sides. Insert the rear axle into the car body. Check whether the rear axle is in the middle of the car, make sure the axle length that extend out on both sides are equal.

Insert the 12mm washers and the axle sleeves into the rear axle, add the trailer wheels and the 8mm washers, then fasten the lock nuts with the wrench. Whilst applying pressure, lock the wheel covers into the grooves on the front wheels.

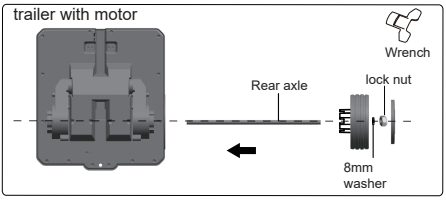

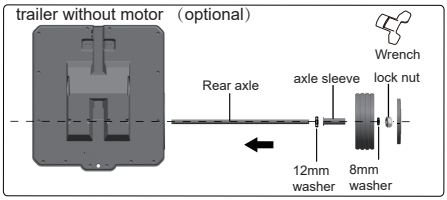

7. Installation of headstock and trailer support frame

Then turn over the car body ，insert the support frame into the fixed position, secure them with the screws.

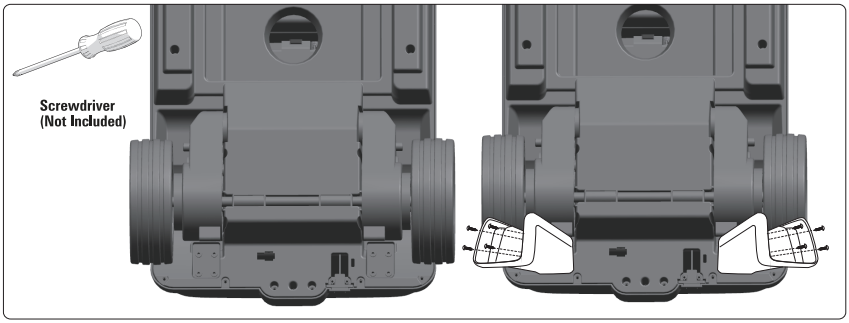

8. Trailer and locomotive assembly

Fix the trailer connection iron part under the trailer, then turn over trailer, attache the trailer with the locomotive, insert the screw and fix with washer and cotton pin,Connect the plugs from trailer and locomotive.

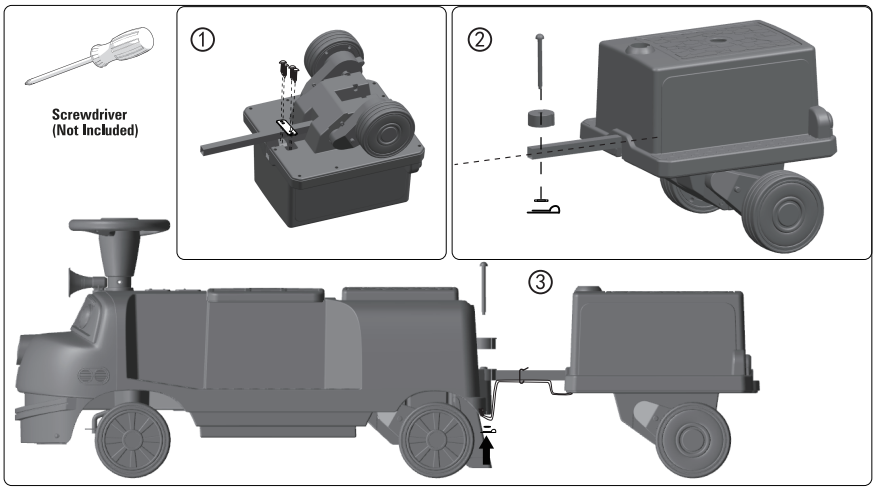

9. Trailer handrail assembly
Insert the trailer handrail to the corresponding openings, push it into place.

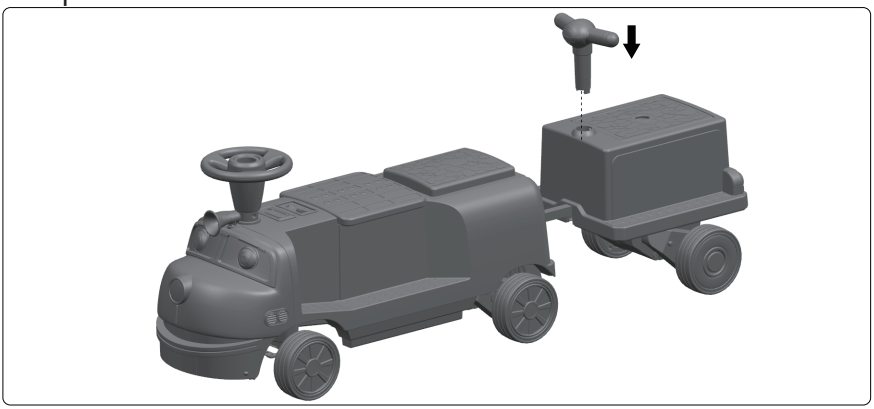

FUSE

This car has a auto-reset fuse, if the car stops suddenly during driving, it is mainly caused by instantaneous current exceeds ,which makes the fuse to trip. Then just stop operating for about 8 seconds, and this fuse can be reset. In order to avoid the fuse tripping and cutting off power supply, please pay attention to the following matters.
This product can't be overloaded, the maximum load is 60kgs.
Don’t drag anything behind the product.
Don’t let the warter or other liquid into the batteries and other electrical components.
Don’t change the circuit system and structure of the product.

SECURITY WARNING

1.The installation and charging of vehicle should be under adult supervision at all times.
2.This product is limited to the children from 37 to 95 months, 60 kg weight limit, please do not overload.
3.This product is ideal for driving on a hard flat surface.
4.It is strictly prohibited in the streets or the road, pot holes, and slopes.
5.Avoid driving in the sand or grass or uneven ground.
6.Children should be given full instructions on operation of the car. Improper operation can cause damage or accidents.
7.While children are driving, it is parents' duty to supervise at all time to avoid accidents.
8.Avoid driving in rains or flooded pathways. By doing so it can damage the motor, circuit and other electrical equipments.
9.Battery charger should be regularly inspected by parents to insure that the wires, plugs, crusts and other components are not damaged. Please stop using if any damage is found, until it is completely restored.
10.In order to ensure product life and safety, avoid damage to the charger, battery or electric circuit, the car must use the default configuration of a dedicated charger and power supply.
11.Rechargeable batteries should be removed from the toy before charging.
12.When no use of product, please cut off the product power, and keep all the switch to "stop" or "off" position.
13.The charger provided is not a toy. It is to be kept away from children.
14.Strictly prohibit using the non-manufacturer provided parts.
15.This product is made of PP material mainly, and the safe using time is two years.

USAGE DIRECTION

1. Before using it, make sure that all the following works are done.
●Step described in accordance with the instructions to complete the installation of the car, the protector has been plugged in, the power supply has been switched on.
●Make sure that all the positions which need the screws are fixed tightly.
●Parents or guardian should ensure that children have taken the safety measures before using.
To reduce the risk during using, pay attention the followings: When driving the car ,child should sit on the car seat.
Adult or parents should take more care and guidance when child driving and can't leave away.
Pay attention to the driving environment and driving on the hard flat surface, not the unsafe environment.
For example:
a.The trenches, the riverside, slope or uneven ground;
b.Road or other places for driving and walking;
c.The obstruction which is easily hitting and causing injury;
d.Other unsafe zones.
To avoid accident, please use only in daytime or bright place, avoid using under low visibility.

WARINING:
When changing the gears, the accelerator should be released and the car has completely come to a stop. Prohibit to change the gear while the car is still moving, because that can damage the wire and other transmission parts.

2. Operating(function reference diagram)

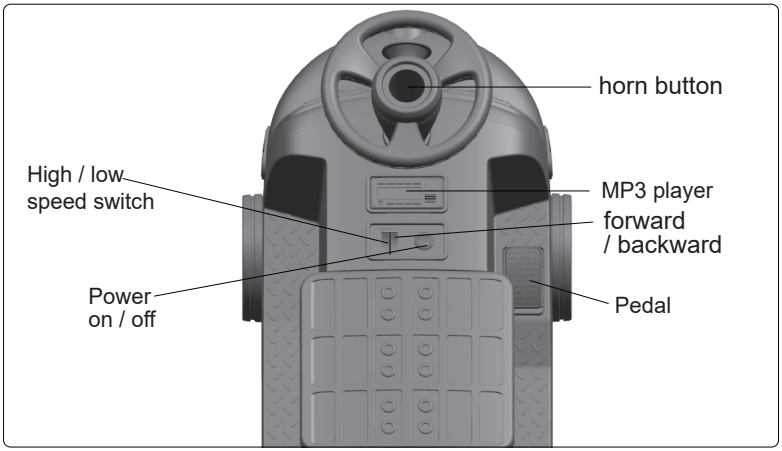

MP3

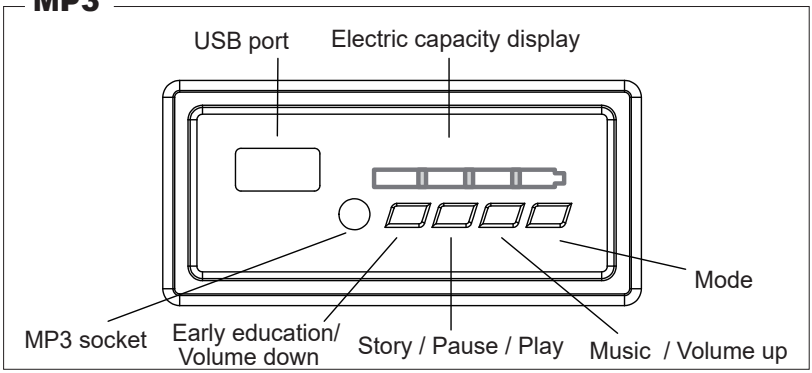

CHARGING WAY

●For Safety purpose ,the charging must be done by adults.

●The charging port is located in the lower left corner of the locomotive, please charge the battery as the instructions below.

●If the car has slowed down, it needs to be charged by 8-12 hours, maximum 20 hours.

1.First insert the plug of the charger into the charging port. (The car power will be cut off)

2.Then insert the charger to the power socket.

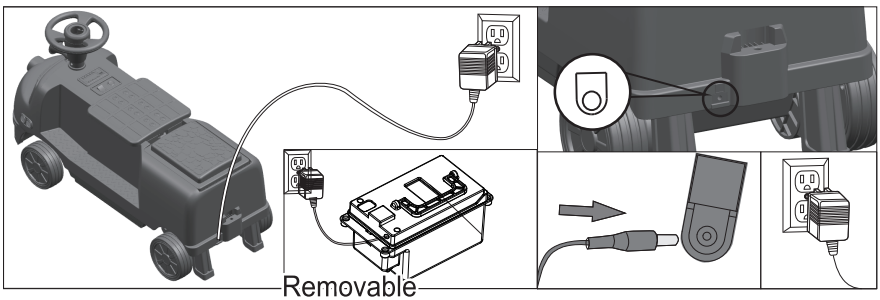

Attention:

·Can only use the charger and battery according to manufacturers regulations.
·Do not mix old and new or different types of batteries.
·The battery terminal should not be short circuit.
·Do not open the battery or charger.
·Do not reverse the battery.
·Before charging, please check whether the charger, battery and plug are ok, if you find any broken parts, you must stop using it immediately. And do not use it until it is fully repaired.
·The battery will be little warm when being charged, it is normal. If not, it may be caused from the short circuit of charger or circuit board.
·Must use the pressing plate to fix the battery.
·Run out of battery must be handled by adults, remove the battery which has run out from toys to recycle properly and shall not be arbitrarily discard.
·If the product is going to be stored unused long time , it must be fully charged, and charge it every 3 months ,so as to make sure the battery life.
·Charger and Battery are not toys. Keep them away from children.

MAINTENANCE AND SERVICE

1, Before use, parents should check whether all parts like batteries, charger, wires, plug, outer body and other parts are in good condition, check whether the screws are loose and whether there are potential safety hazards. Any damaged parts founded should be repaired before using.
2, After using the product for a period of time, use a small amount of lubricating oil to the moving parts to prevent wear and tear of rust.
3, Keep the car away from fire and direct sunlight. Place it stably, not upside down. The car shall be stored indoors or outdoors under cover.
4, The car should be kept away from hot items, such as stoves or heaters, or the plastic parts will melt. When charging, the car should be kept away from inflammable materials to prevent it from catching fire.
5, Charge in time after use. Charging should be done by adults. If the product is going to be unused for a long time, it must be fully charged. Charge it every month so as to extend the battery lifespan.

6, A soft cloth must be used to clean the car. Do not use chemical solvents to clean the plastic parts. Do not use soap or water to clean the car. Driving in rainy or snowy weather, water can damage the motor, battery and circuit system.
7, When stopping or storing the car, please cut off the power and make sure all switches are in the 'STOP' or 'OFF' position.
8, Do not use fuses different from the specifications of this product.
9, Do not change the product structure and circuit system. Maintenance and repair work must be done under the guidance of the professional or technical personnel in place.
10, Do not use the product for other purposes.
11, Battery negative short circuit is prohibited.
12, Rechargeable batteries can only be charged under the supervision of the adult.

TROUBLESHOOTING

Car does not move or power on	If "power" switch is in OFF position
	If the battery is not connected, check the red and black wires.
	If the charger is plugged in, car will not power on. Unplug charger.
	If the pedal switch is not functioning properly
	If the wheels stuck and cannot move
Car moves slowly	If the battery is not fully charged. Need to be charged in time
	If there is an issue with the wheels
	If rider weight exceeds specifications
Battery does not charge	If the charger is malfunctioning
	If the battery lost its capacity
	If the charger and battery connection are charged

PINGHU SHUANGXI BABY CARRIER MANUFACTURE CO.,LTD.
PINGHU BABY CARRIER INDUSTRY CITY, ZHEJIANG, CHINA