Installation & Assembly

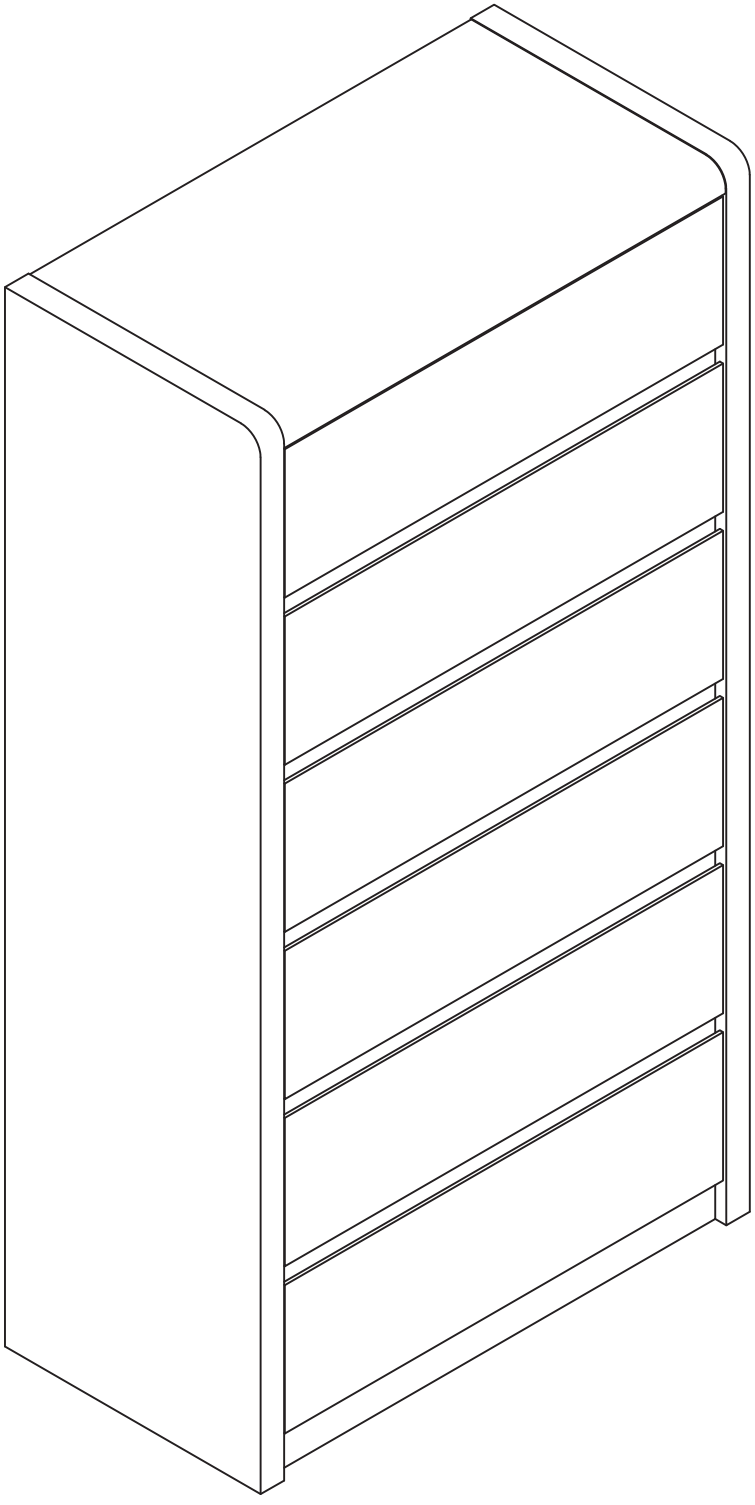

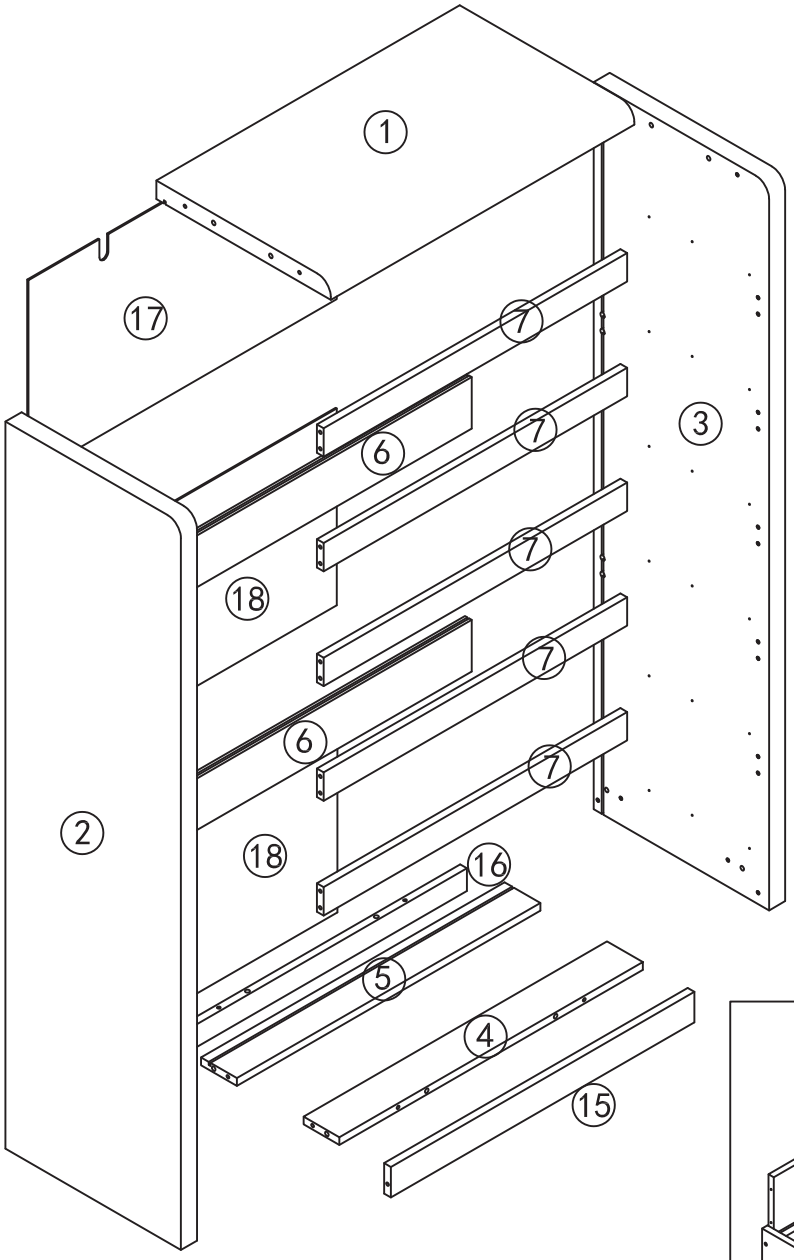
1
17
7
3
6
7
18
7
6
7
2
18
16
5
4
15

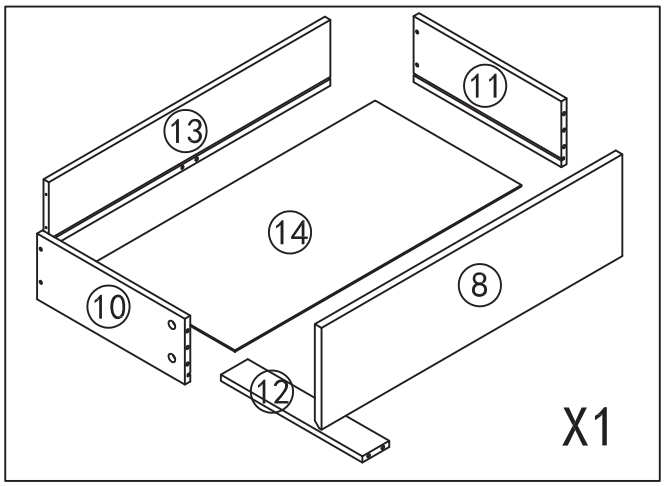
11
13
14
8
10
12
X1

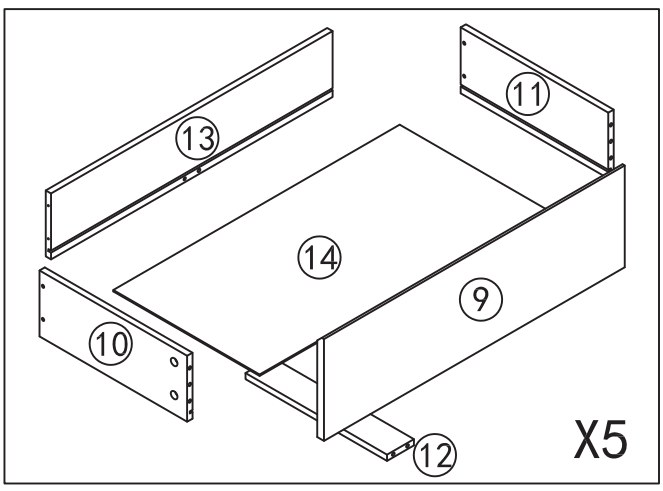
11
13
14
9
10
12
X5

A 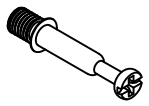 74+2PCS	B  74+2PCS	C 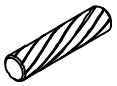 Ø8*30MM 12+2PCS	D 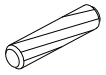 Ø6*30MM 24+2PCS
E  M4*30MM 34+2PCS	F  6+1PCS	G  M3.5*12MM 72+2PCS	H  18+2PCS
I  M3*16MM 18+2PCS	J 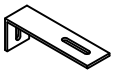 2PCS	K 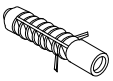 2PCS	L  Ø4*15MM 2PCS
M 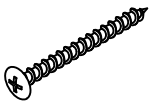 Ø4*35MM 2PCS	N  4+1PCS	P 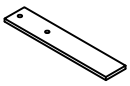 2PCS	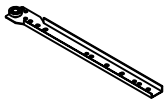 CL*6
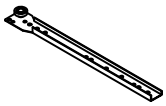 CR *6	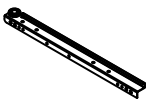 DL*6	 DR *6	

STEP 1

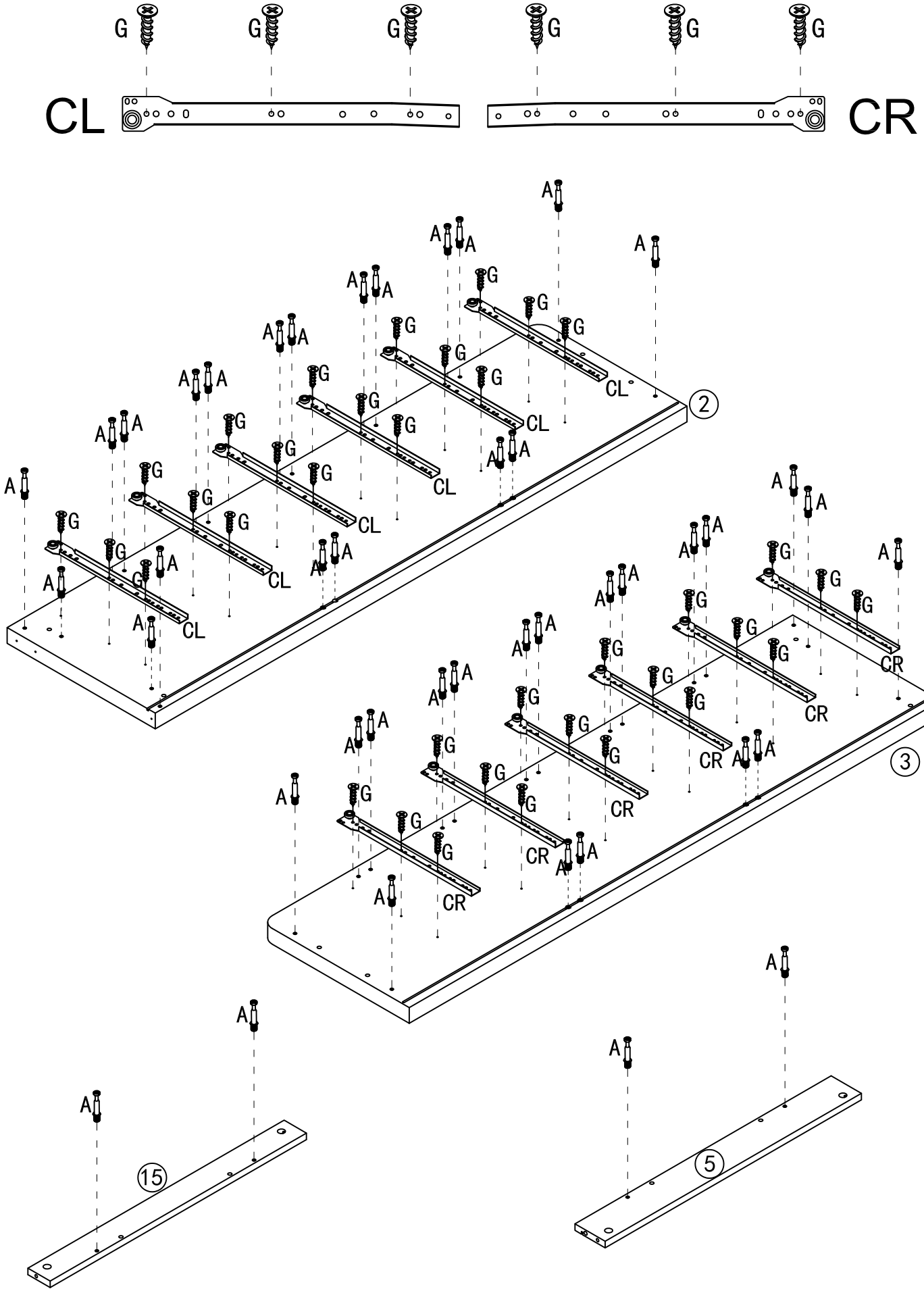

	A*44PCS		G*36PCS		CL*6		CR *6

STEP 2

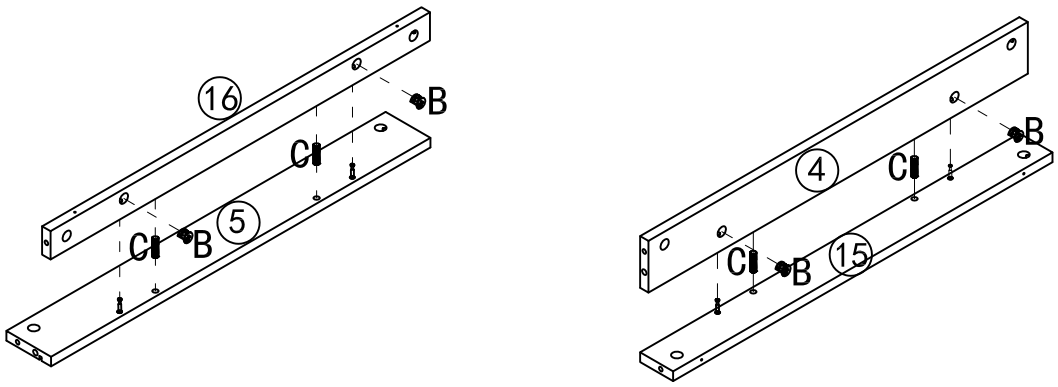

	B*4PCS	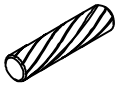	C*4PCS

STEP 3

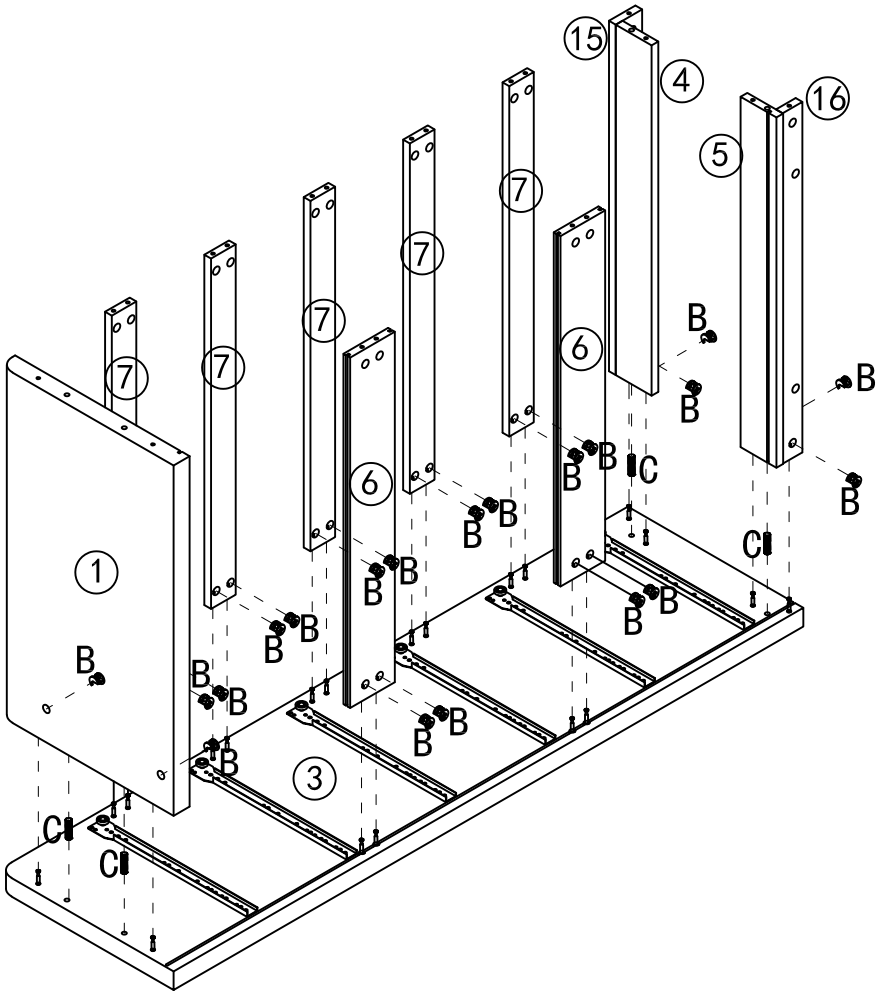

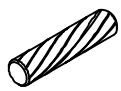	C*4PCS
	B*20PCS

STEP 4

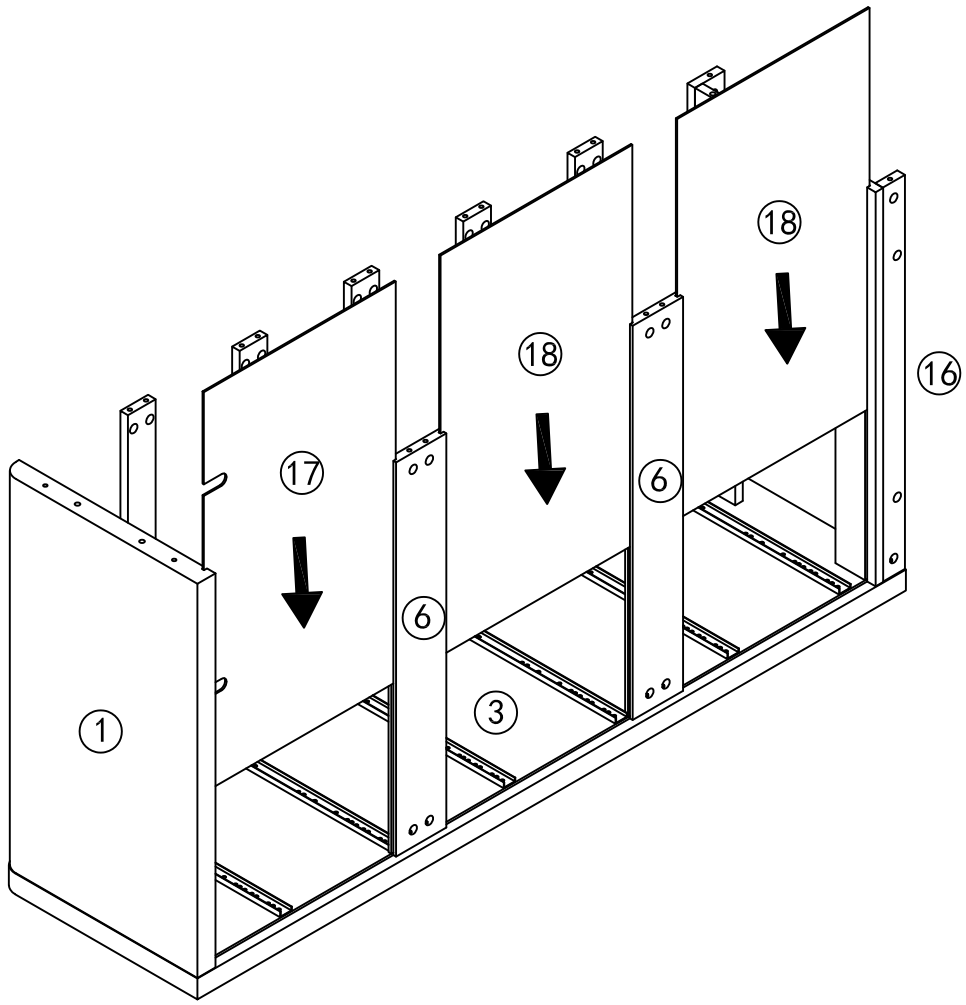

STEP 5

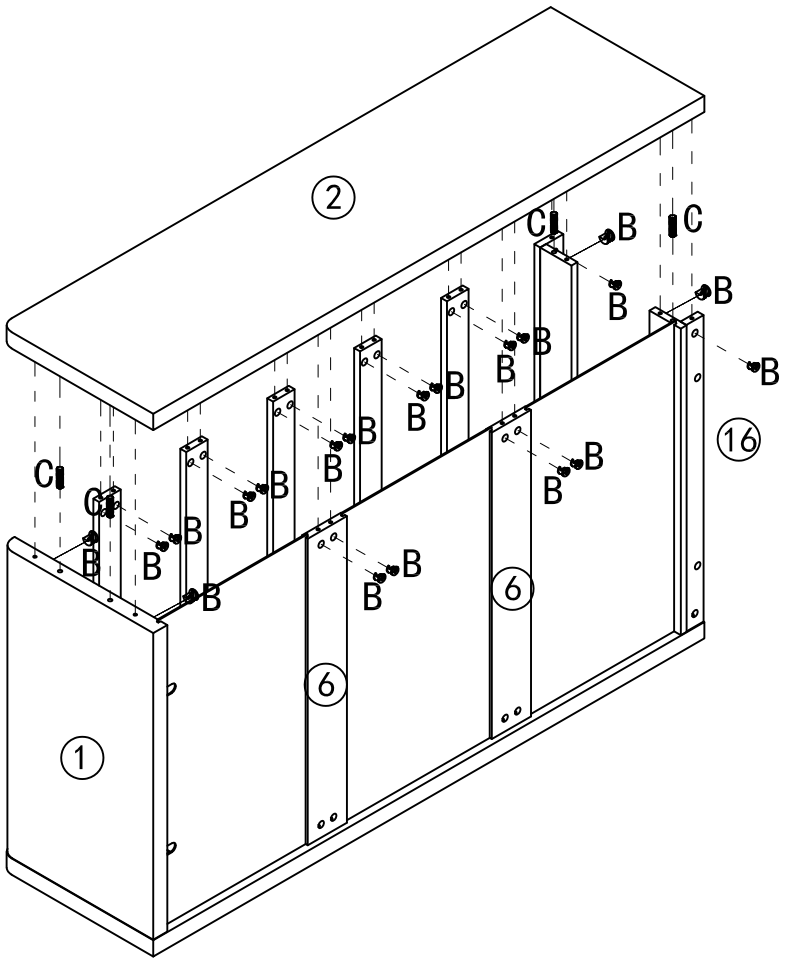

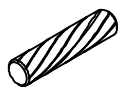	C*4PCS
	B*20PCS

STEP 6

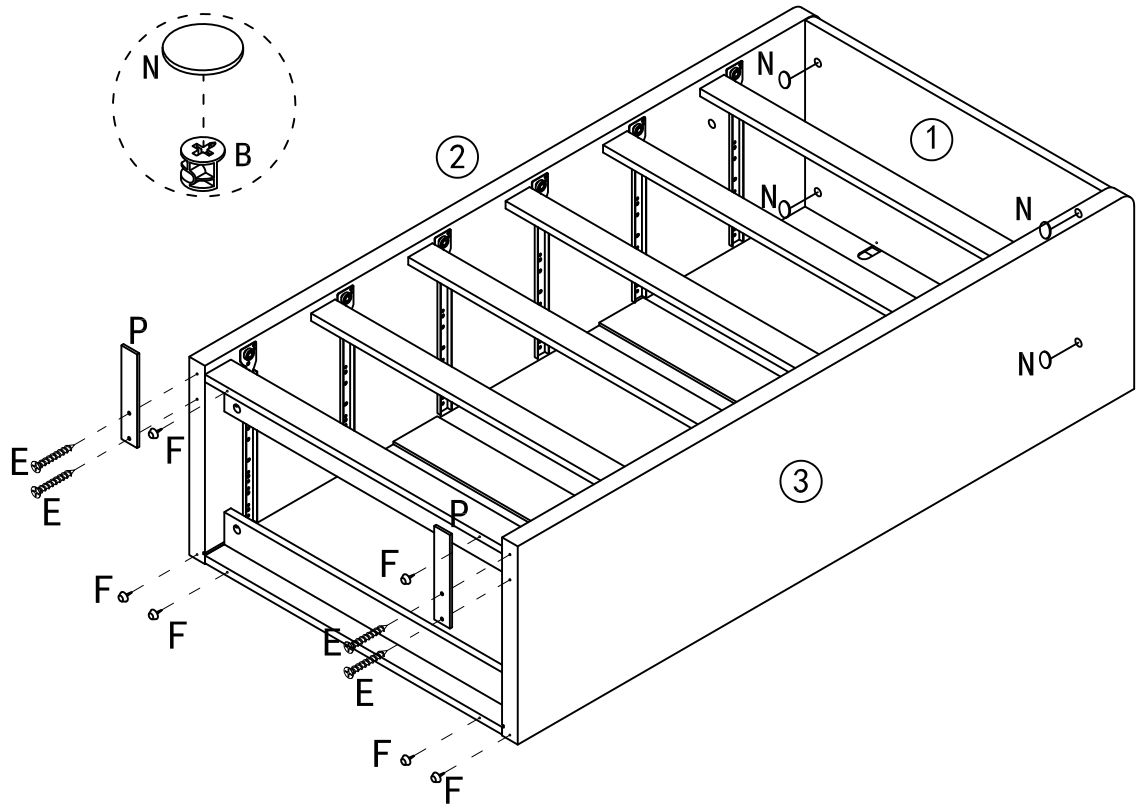

	E*4PCS		F*6PCS	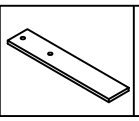	P*2PCS		N*4PCS

STEP 7

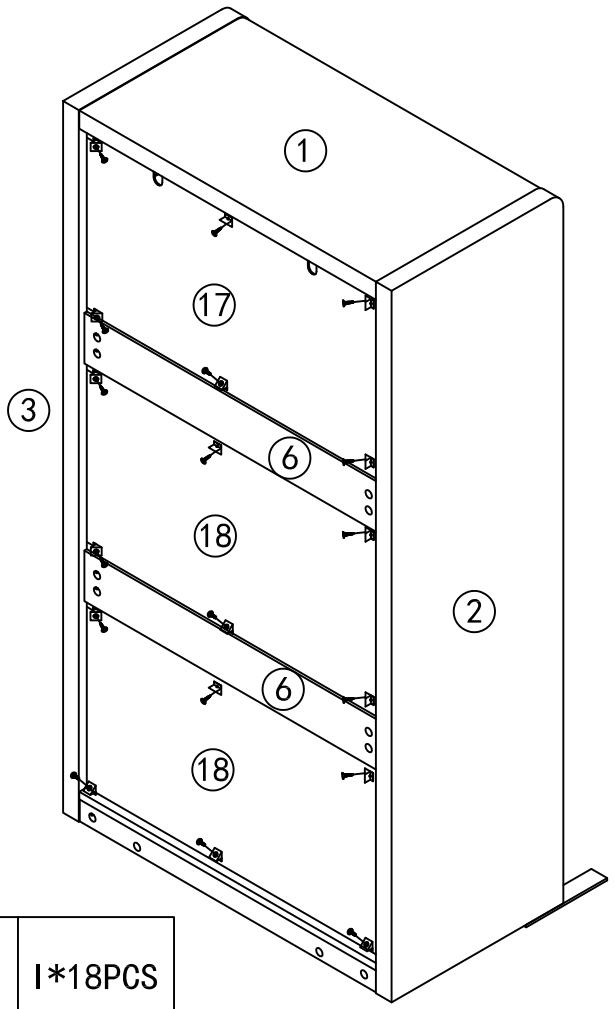

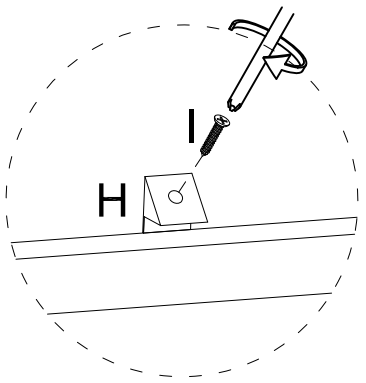

	H*18PCS		I*18PCS

STEP 8

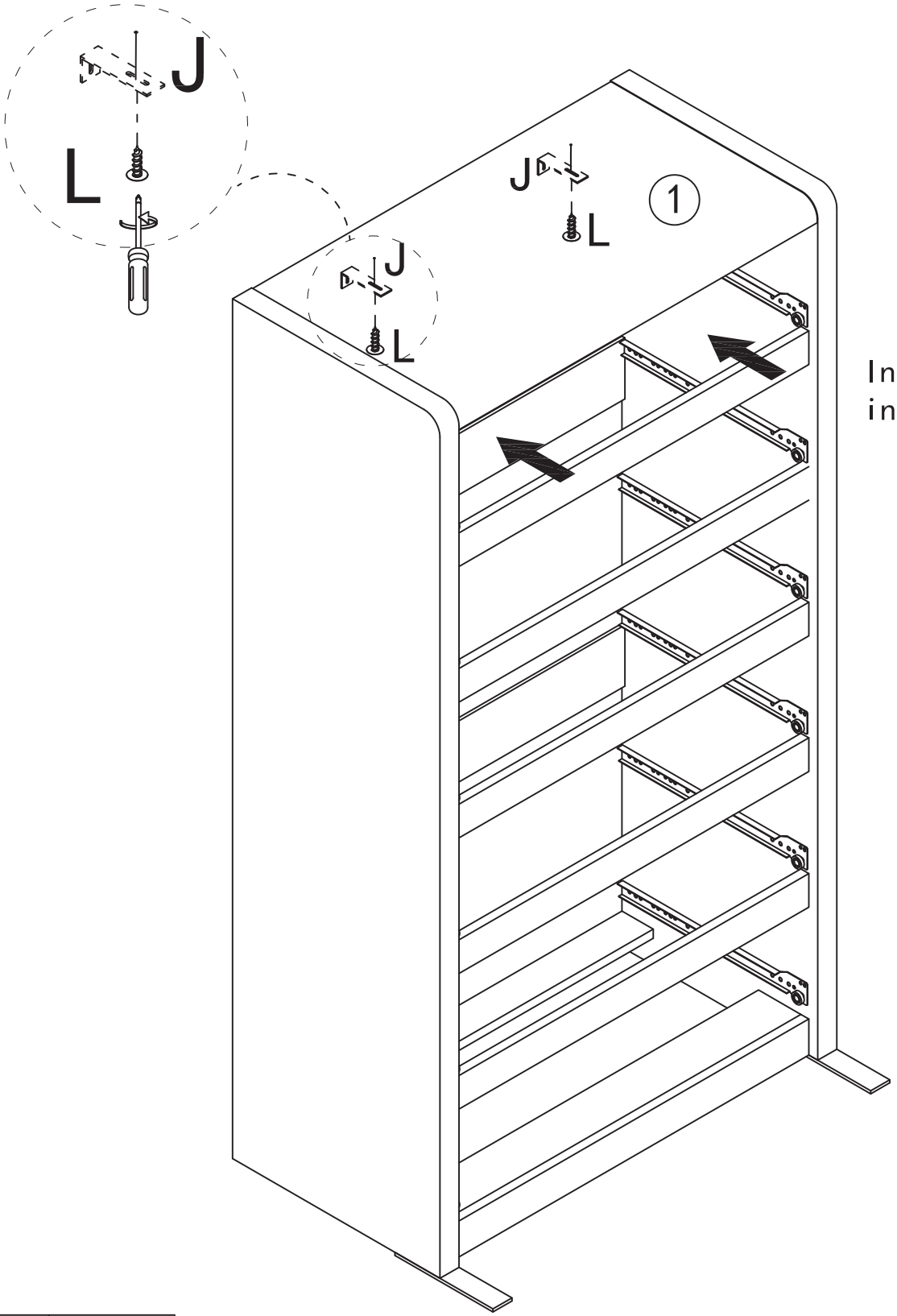

Install from inside

	L*2PCS
	J*2PCS

STEP 9

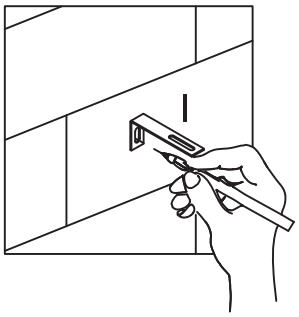

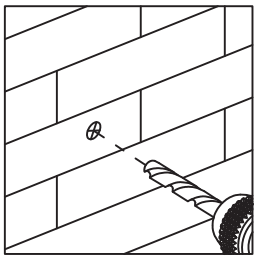

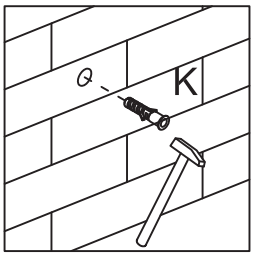

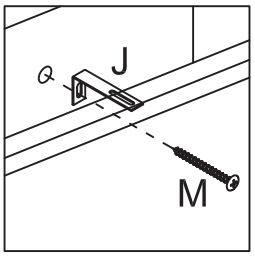

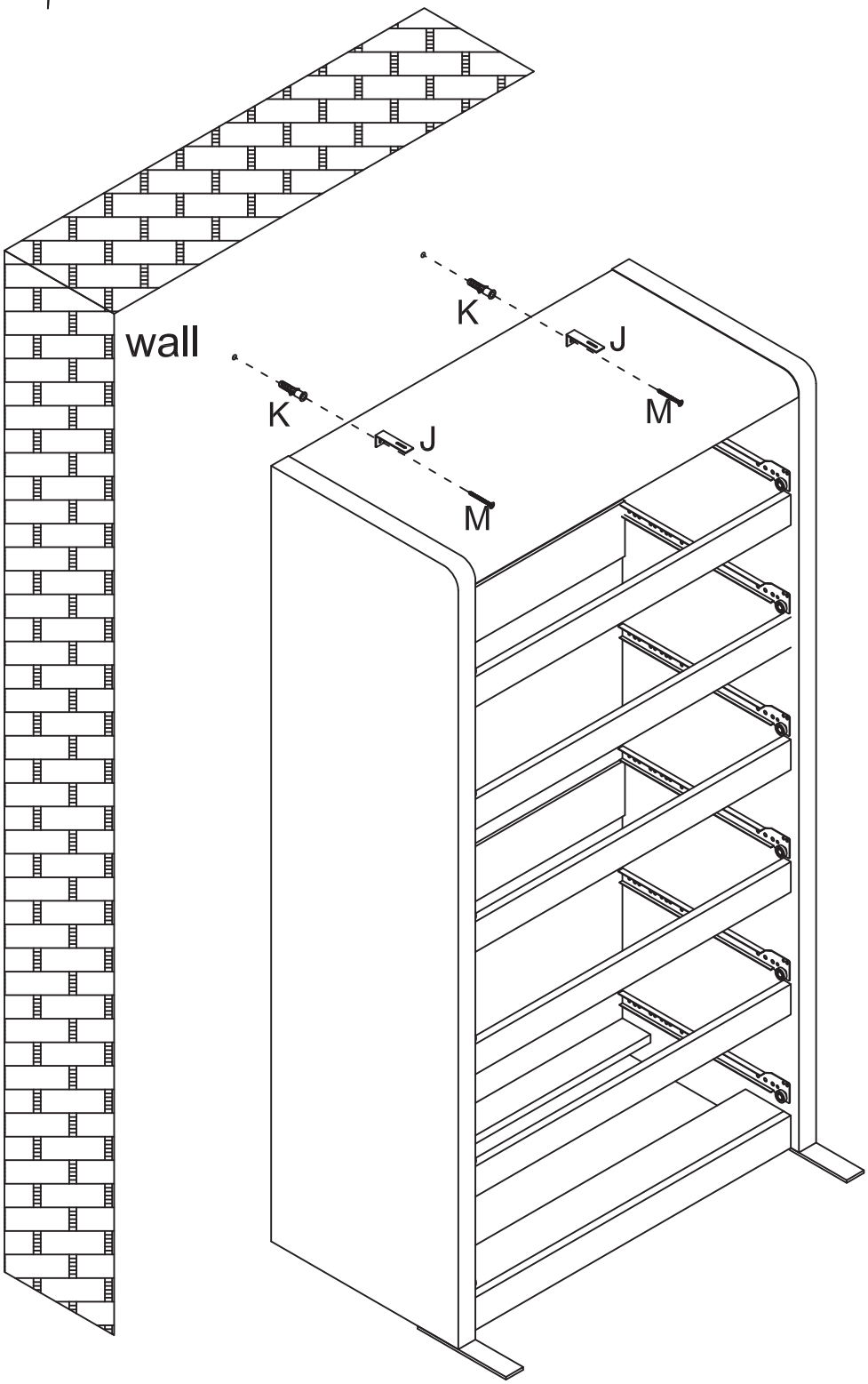

	M*2PCS		K*2PCS

STEP 10

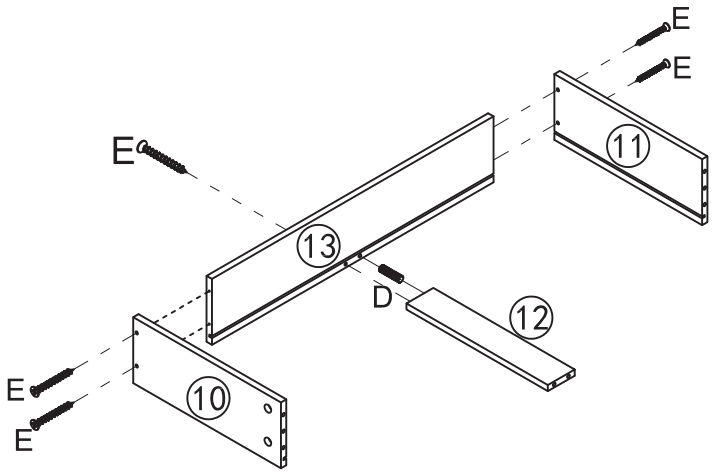

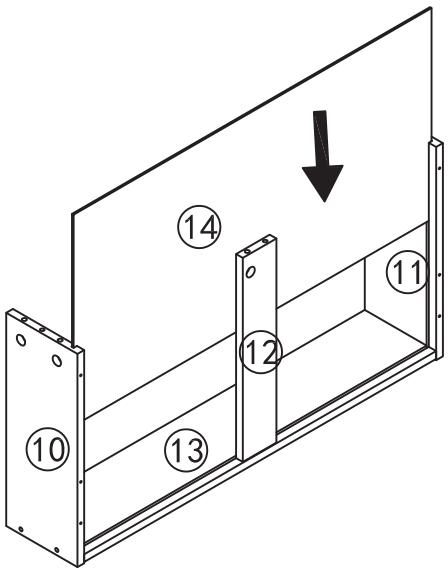

	E*30PCS	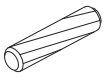	D*6PCS

X6

STEP 11

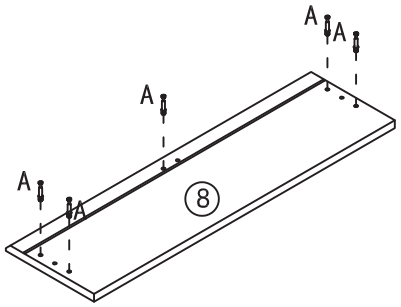

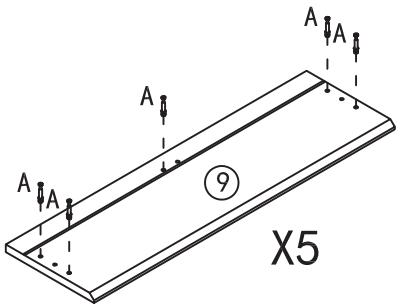

X5

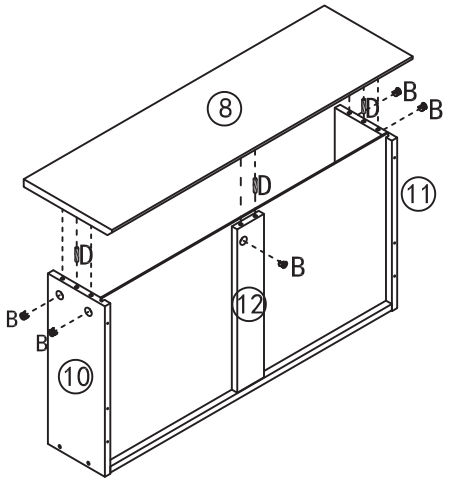

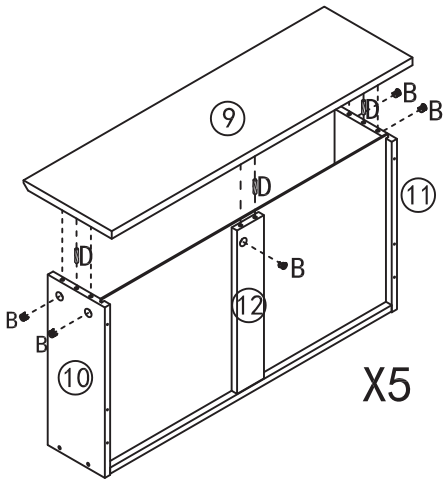

X5

	A*30PCS		B*30PCS	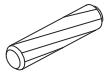	D*18PCS

STEP 12

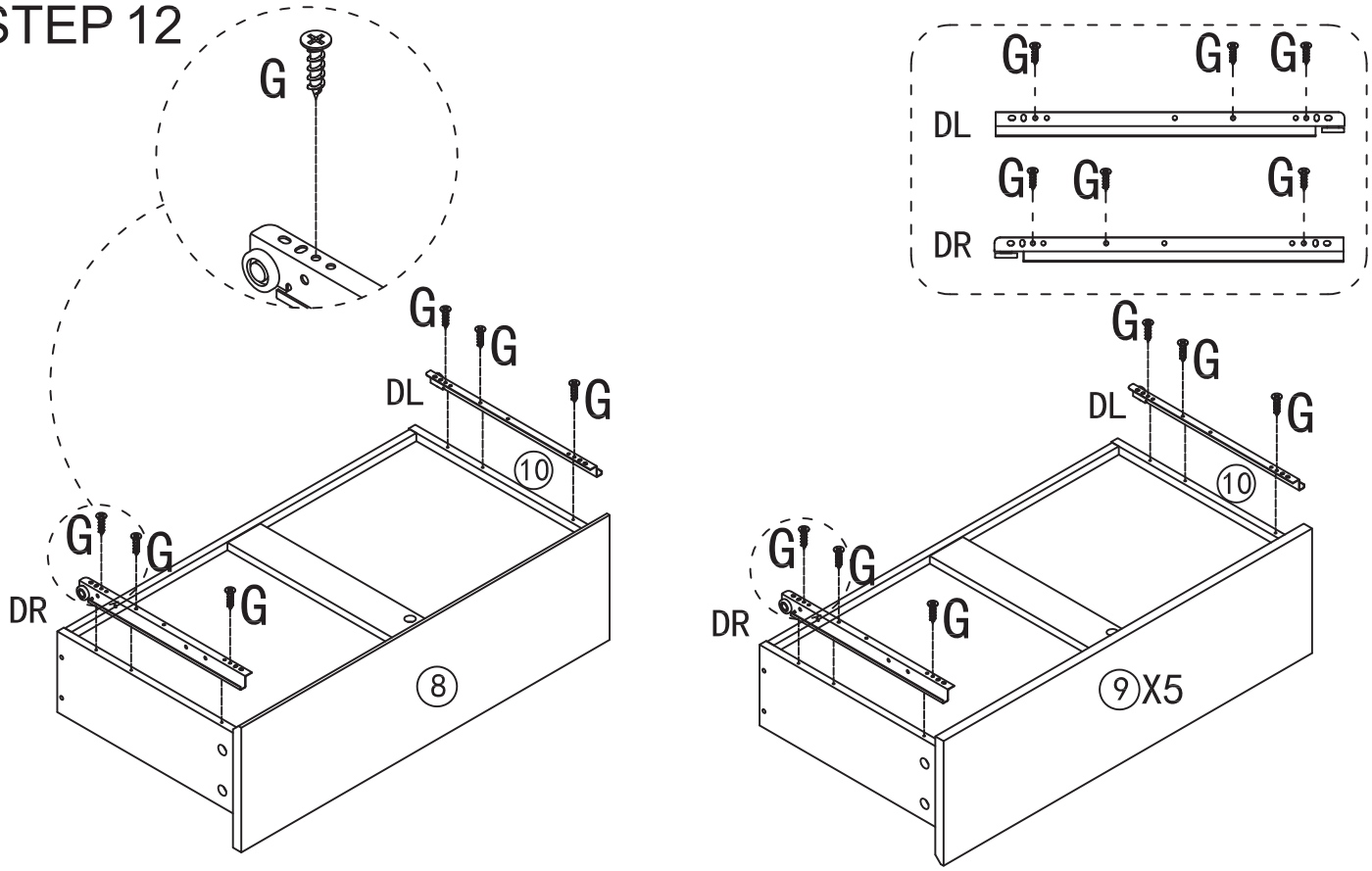

	G*36PCS		DL*6PCS		DR*6PCS

STEP 13

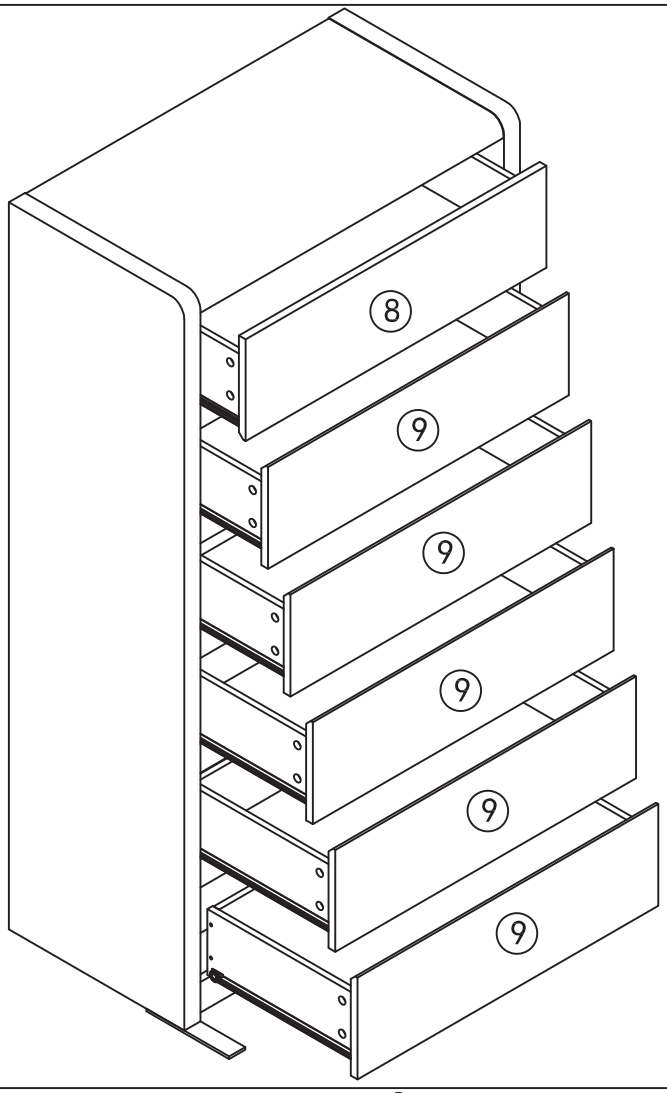

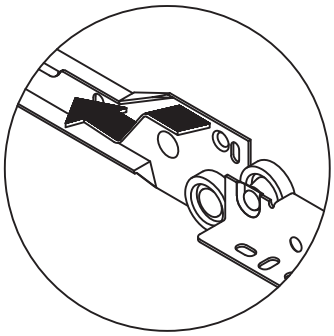

STEP 14

