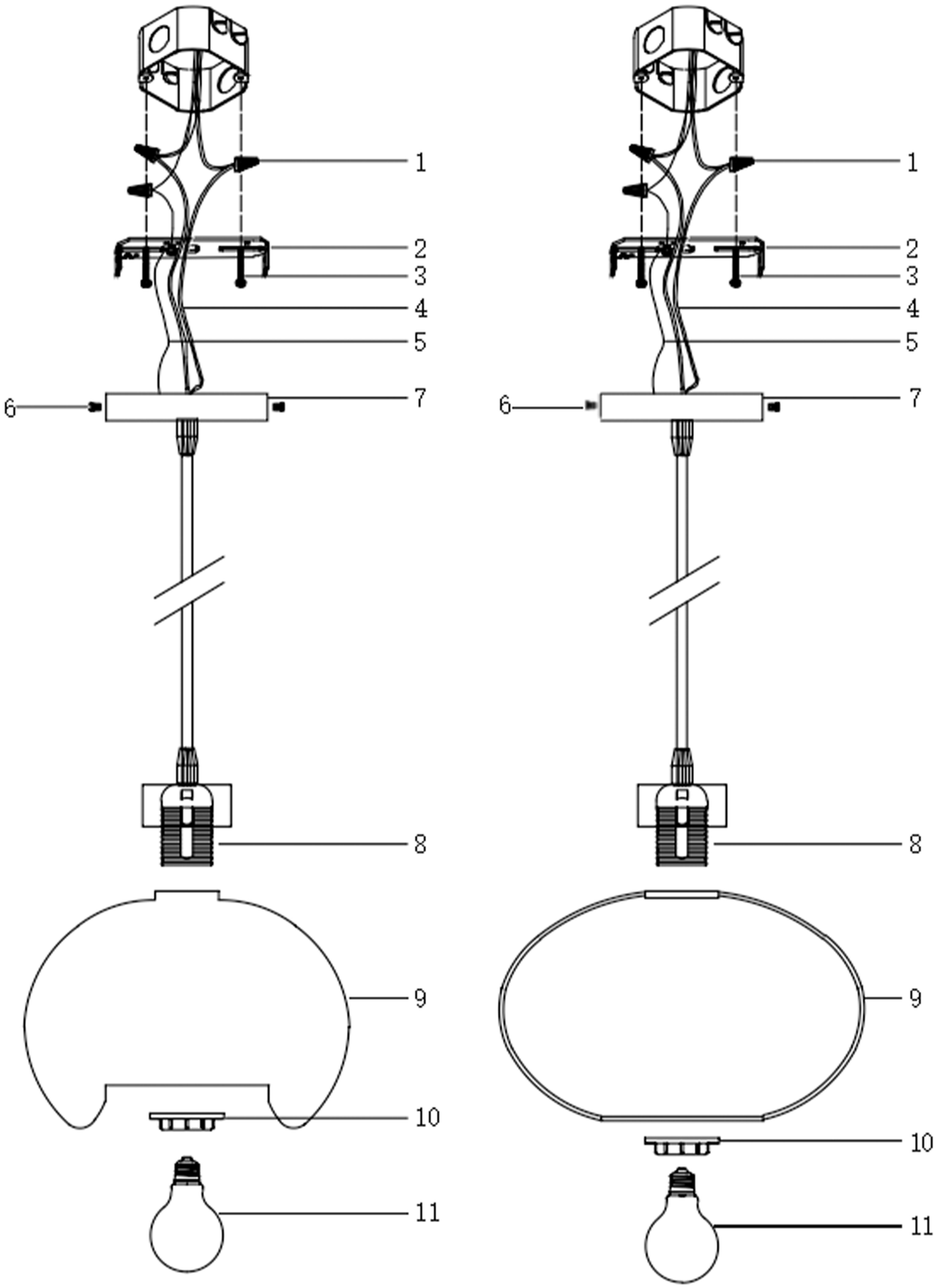

Installation Steps:

Step 1: Fix the mounting plate (2) on the junction box with screws (3).
Step 2: Connect the power cord (4) of the lamp body to the external power cord with the wiring cap (1), fix the ground wire (5) with the green screw, and then connect it to the external ground wire with the wiring cap (1).
Step 3: Use screws (6) to fix the ceiling basin (7) on the mounting plate (2).
Step 4: Fix the glass cover (9) to the lamp head (8) with lamp holder (10).
Step 5: Attach the bulb (not included) (11) to the lamp head (8).

Accessories:

Part 2: Mounting Plate*1	
Part 3: Mounting Screw*2	
Part 6: Mounting Screw*2	
Part 1: Wiring cap*3	
Part 9: Glass Cover*1	
Part 10: lamp holder*1	

Notice: This light fixture should be installed in accordance with all applicable, local installation codes, and by a person familiar with the construction and operation of it, as well as the hazards involved. Inspect items and contents carefully. If any damage or defect is found, do not install it.