RCC6SDRDS-N

Assembly Instructions

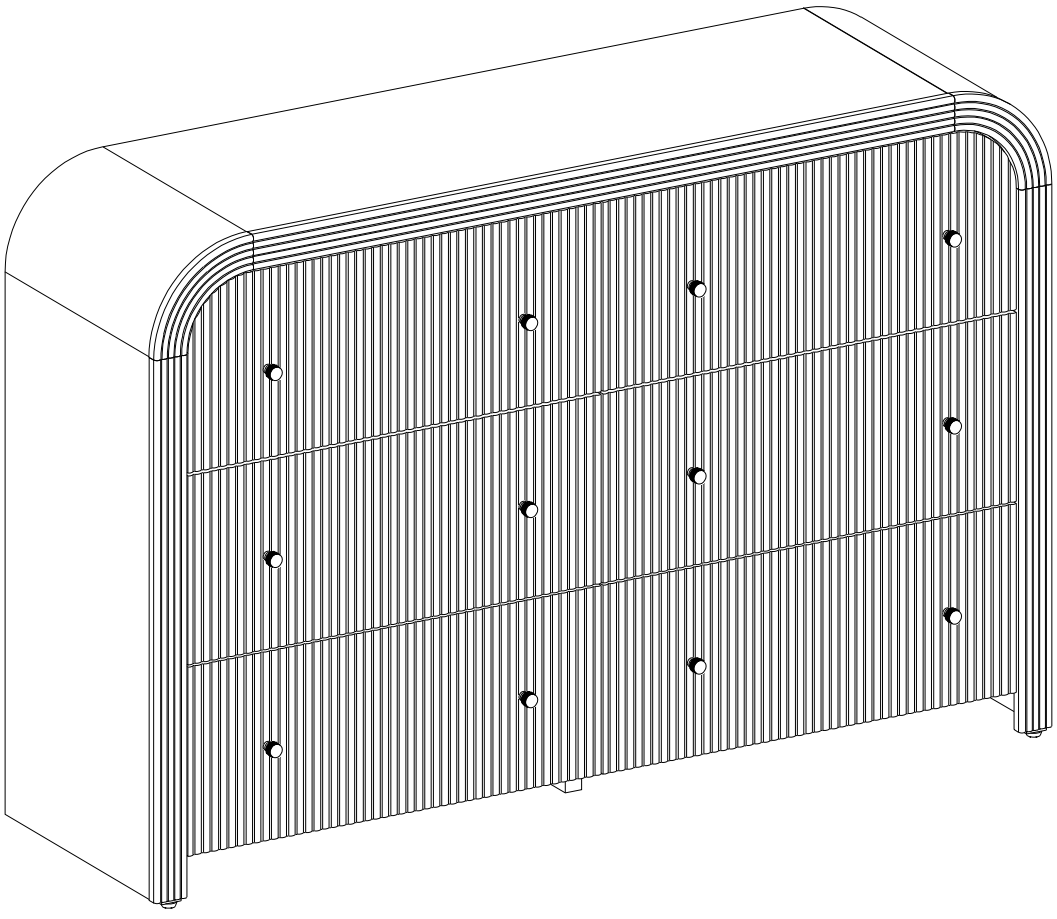

Date 2025-12-15 Rev.03-A

General Assembly Guidelines

I. Ensure that all parts and hardware are available before beginning assembly.

II. Follow each step carefully to ensure the proper assembly of this product.

III. Two people are recommended for ease in the assembly of this product.

IV. A Phillips head screwdriver is required for the assembly of this product .

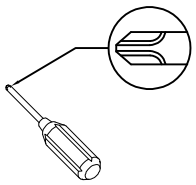

V. The provided glue is to secure wood dowels in place . When first inserting dowels , locate the appropriate hole for the dowel , place a small amount of glue in the hole and insert the dowel . Wipe away excess glue immediately.

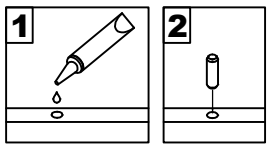

In future assembly steps when dowels are necessary to attach assembly parts together , place a small amount of glue on the end of the dowel before attaching parts together . Wipe away excess glue immediately.

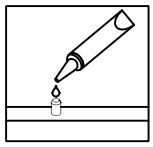

VI HOW THE KNOCK DOWN (KD) ASSEMBLY SYSTEM WORKS

1.Screw the Cam Bolt into the pre-drilled hole on the panel. Make sure Cam Bolt goes into the pre-drilled hole on the end of panel for Cam Lock.

2.Insert the Cam Lock into the pre-drilled large hole on the panel. Make sure the arrow on the face of Cam Lock points towards Cam Bolt.

3.Take a Phillips screwdriver and rotate the Cam Lock clockwise to lock the Cam Bolt.

4.Use the sticker to conceal the Cam.

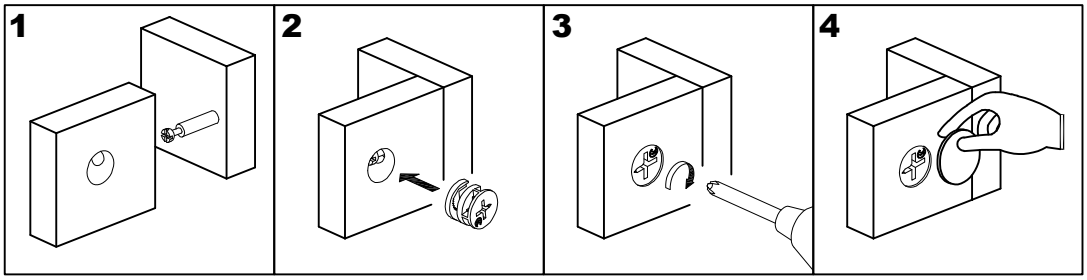

VII. Power tools should not be used to assemble this product .

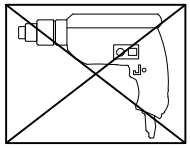

Parts List

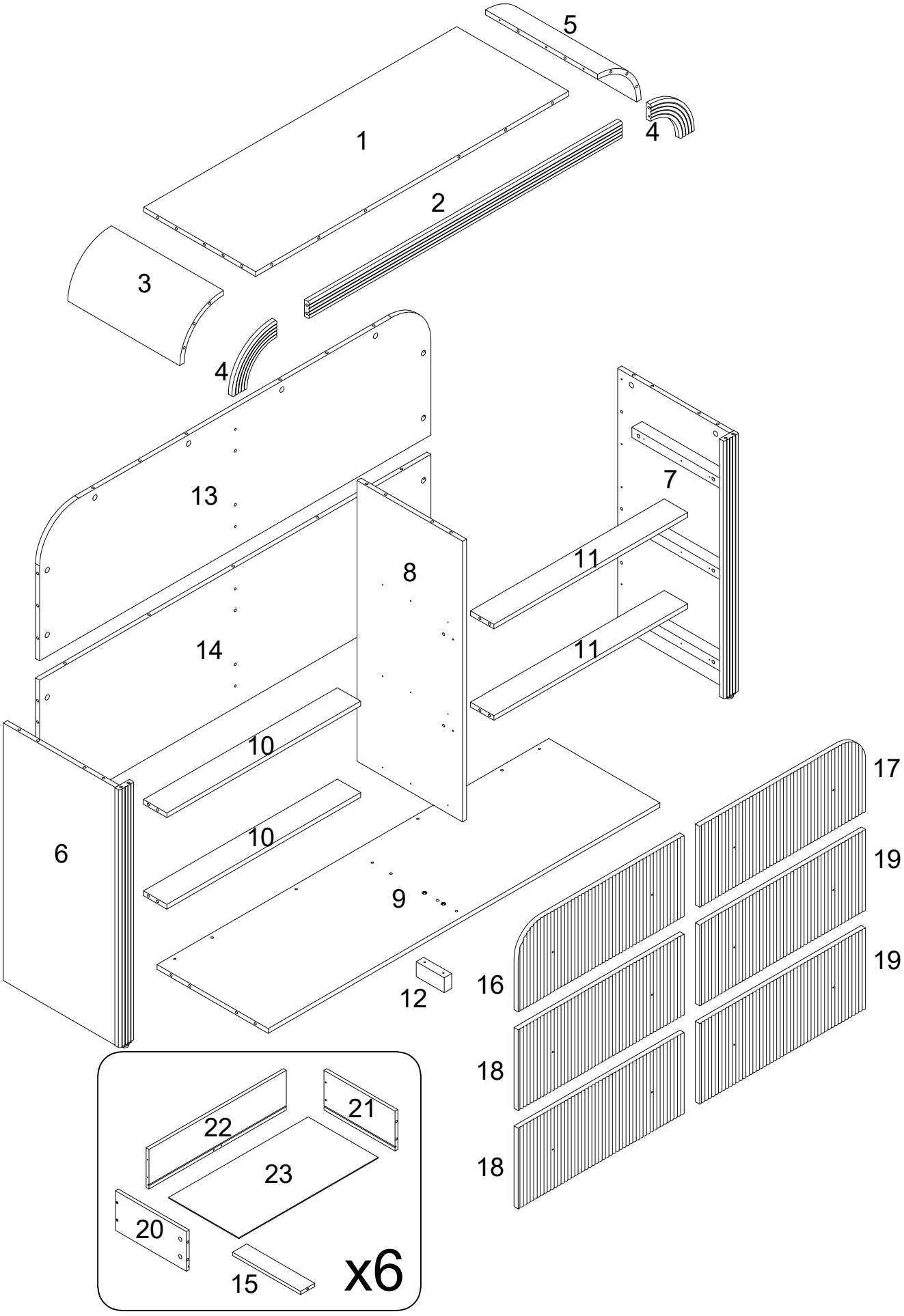

Hardware List

A		Ø8x30mm	Wood Dowel	48 pcs
B	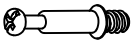	Ø6x33mm	Cam bolt	76 pcs
C		Ø15x12mm	Large Cam lock	46 pcs
D		Ø30mm	Cam cover	84 pcs
E	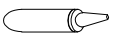		Glue tube	2 pcs
F		Ø15x10mm	Small Cam lock	30 pcs
G		Ø18*25mm	Knob	12 pcs
H	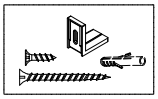		Tipping Restraint Hardware	2 sets
I		Ø4*38mm	Screw	36 pcs
J		Ø8x40mm	Wood Dowel	5 pcs
K		Ø4*22mm	Bolt	12 pcs
L		Ø3.5x12mm	Screw	72 pcs
M	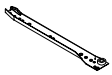	12"	Left Glide Track	6 pcs
N		12"	Left Glide Runner	6 pcs
O	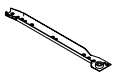	12"	Right Glide Track	6 pcs
P		12"	Right Glide Runner	6 pcs
Q		Ø6x50mm	Screw	12 pcs
R		M 4	Allen Wrench	1 pc

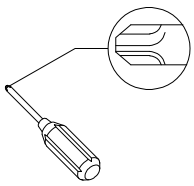

Philips head screwdriver required for assembly
(not included)

Hardware List

S			Metal plate	6	pcs
T		Ø3.5x12mm	Screw	12	pcs

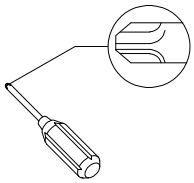

Philips head screwdriver required for assembly
(not included)

Step 1

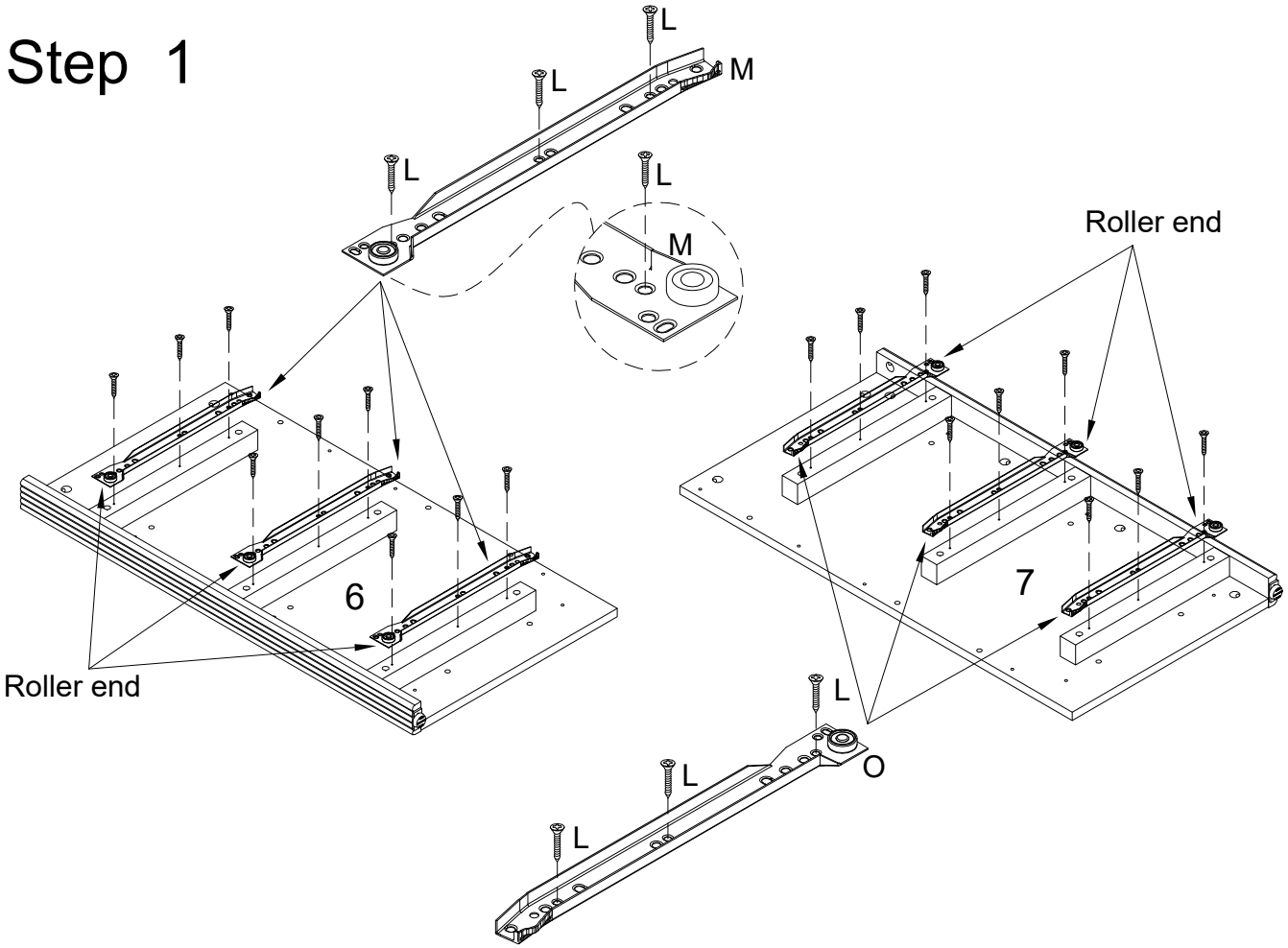
L
L
M
L
L
M
Roller end
6
7
Roller end
L
L
O
L

Step 2

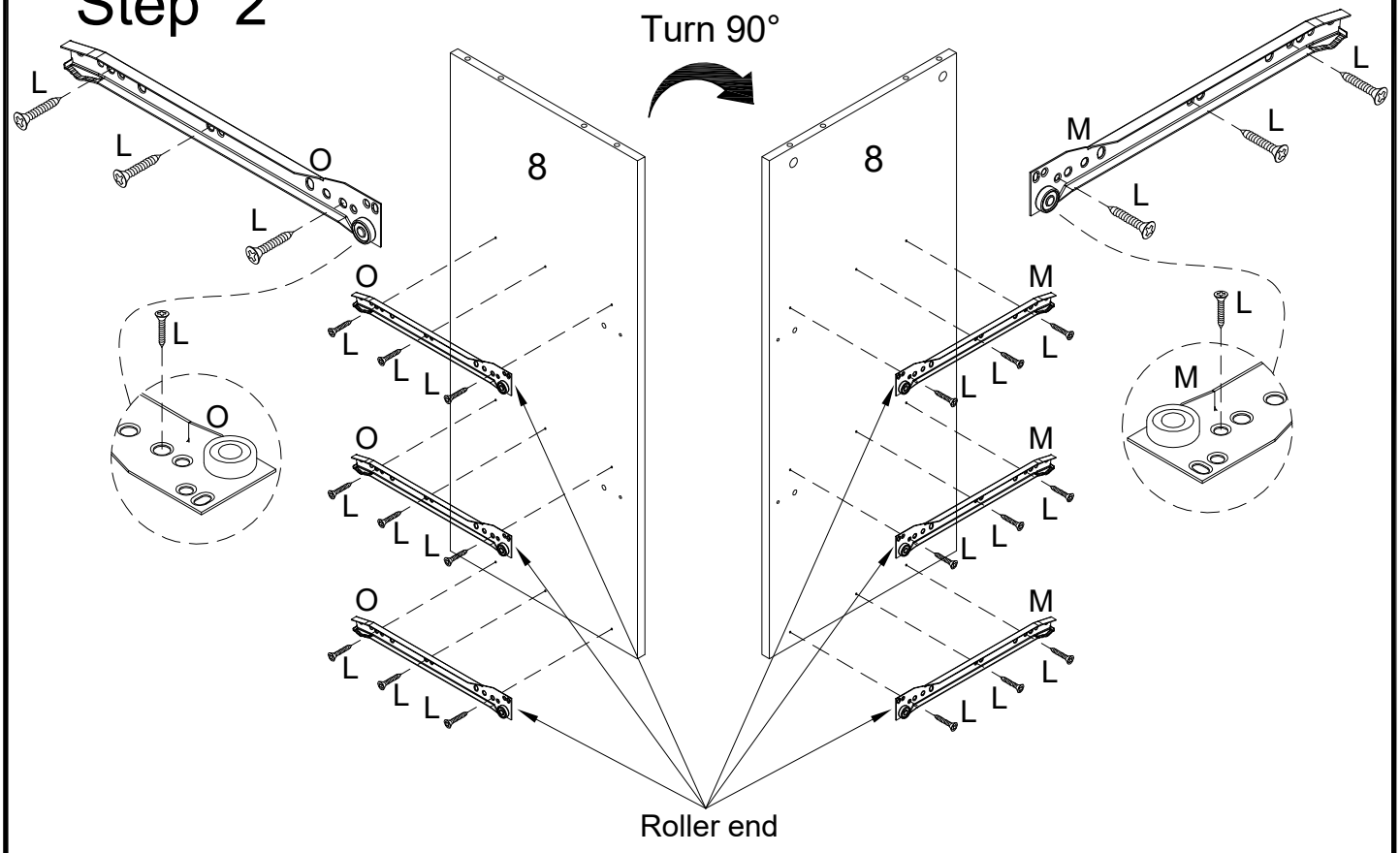
Turn 90°
L
L
O
L
8
8
M
L
L
L
O
L
L
L
M
L
L
L
L
L
M
O
L
L
L
M
L
L
L
L
O
L
L
L
M
L
L
L
L
Roller end

Step 3

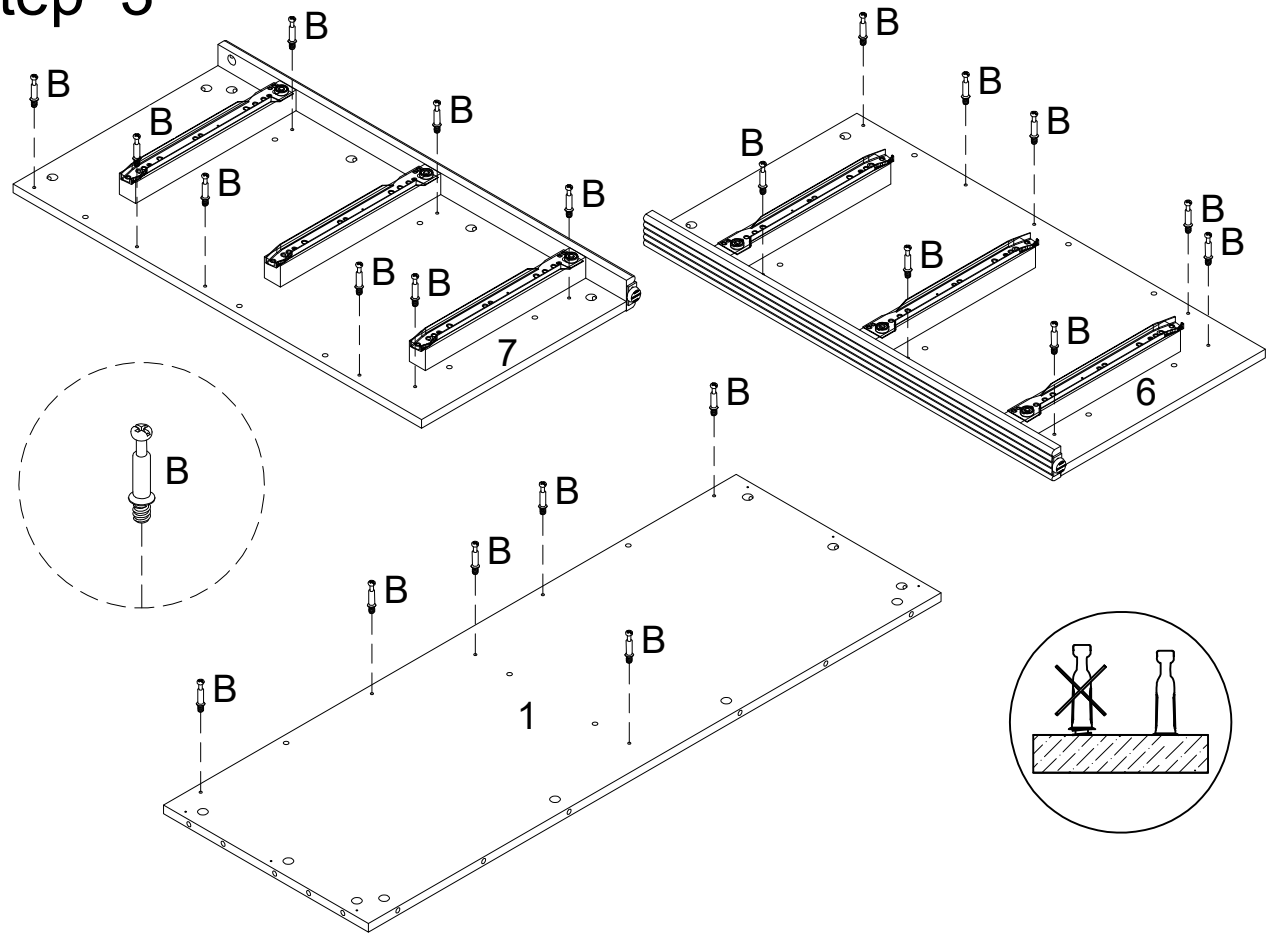

Step 4

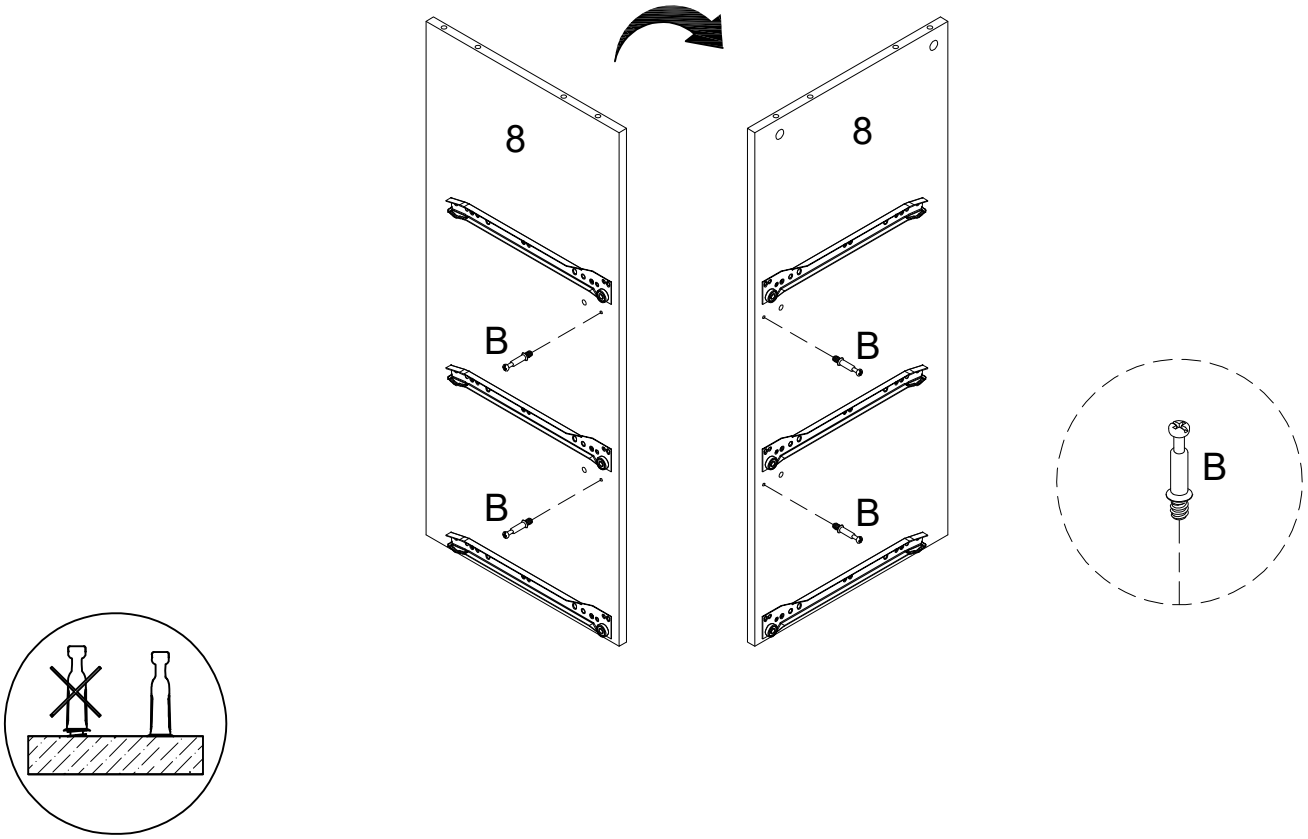

Step 5

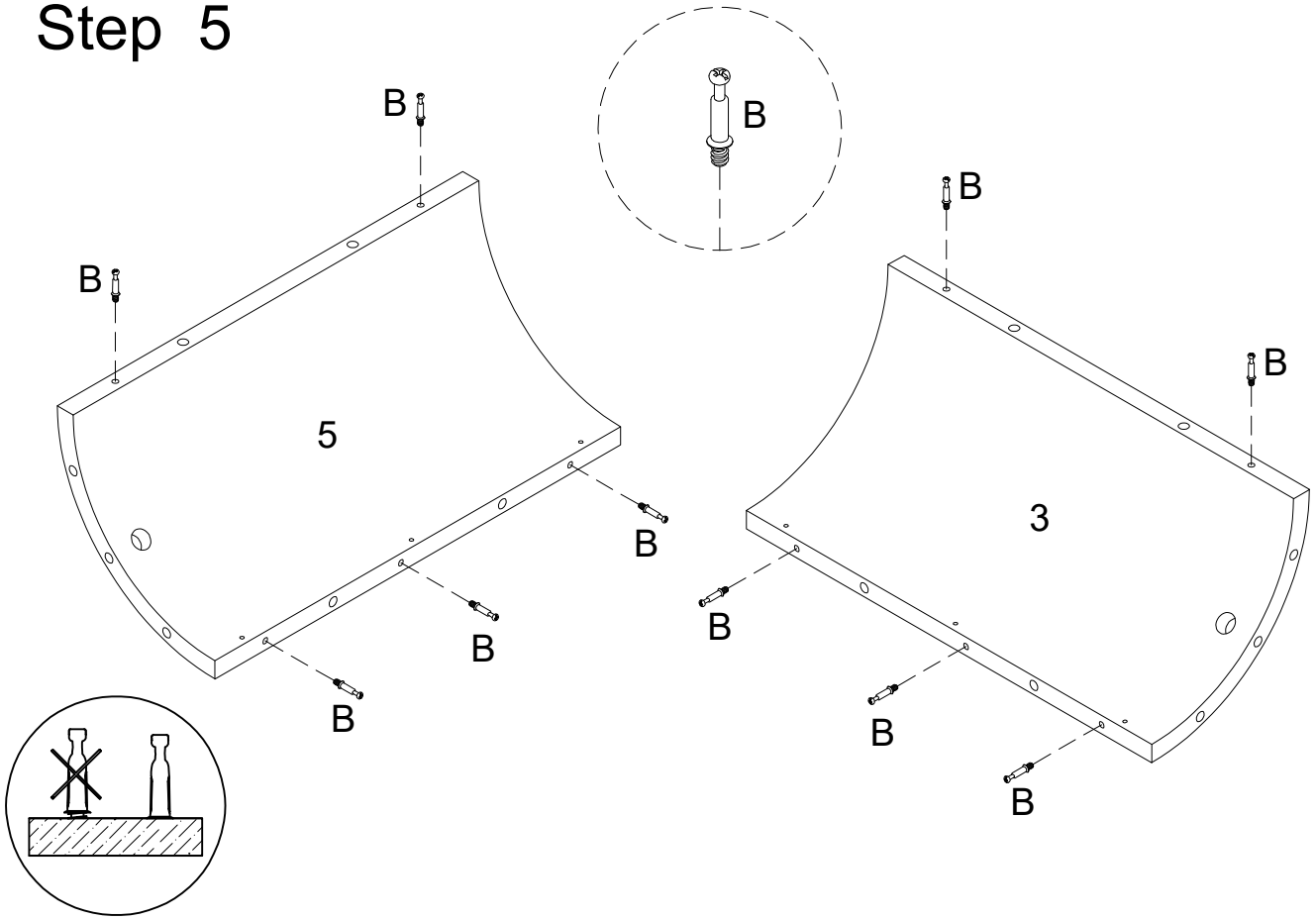

Step 6

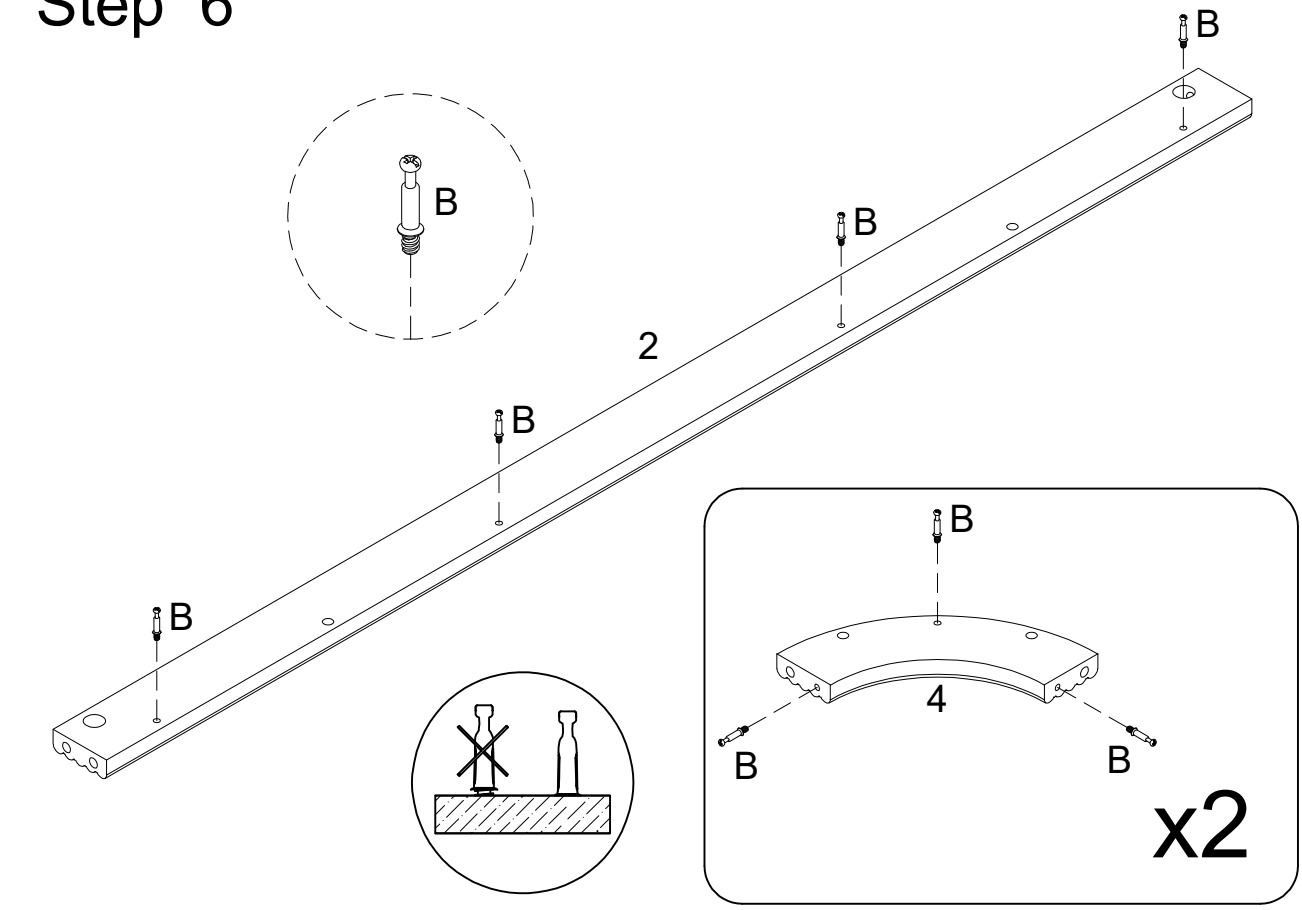

Step 7

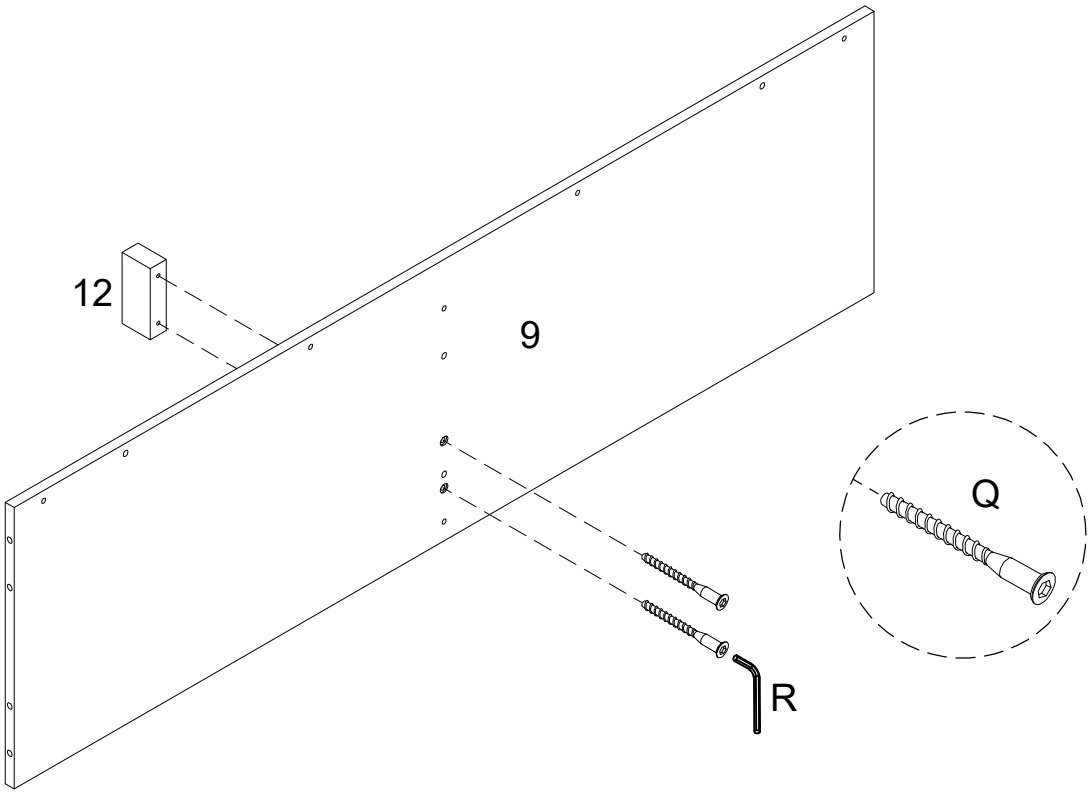

Step 8

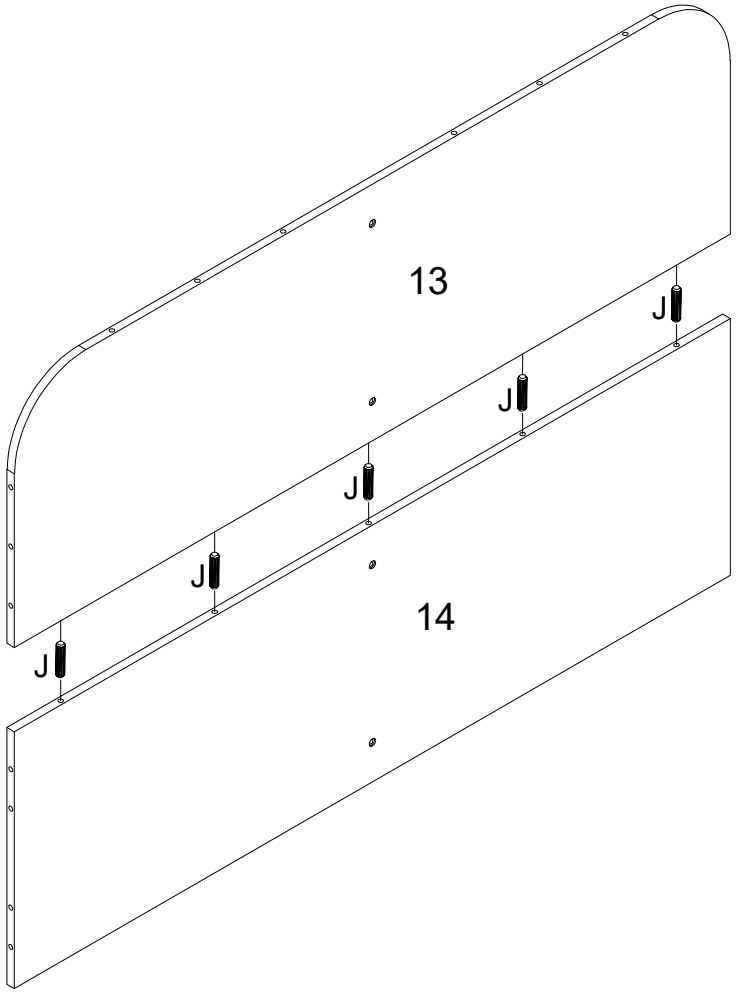

Step 9

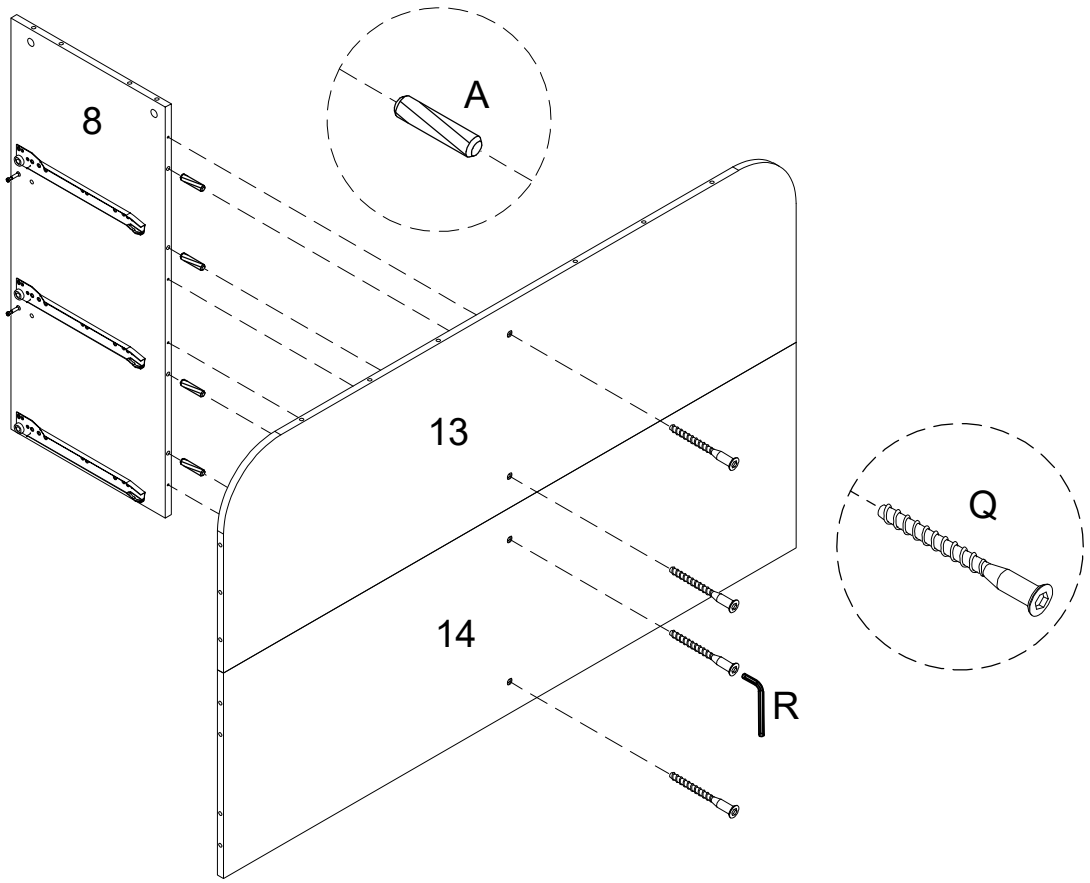

Step 10

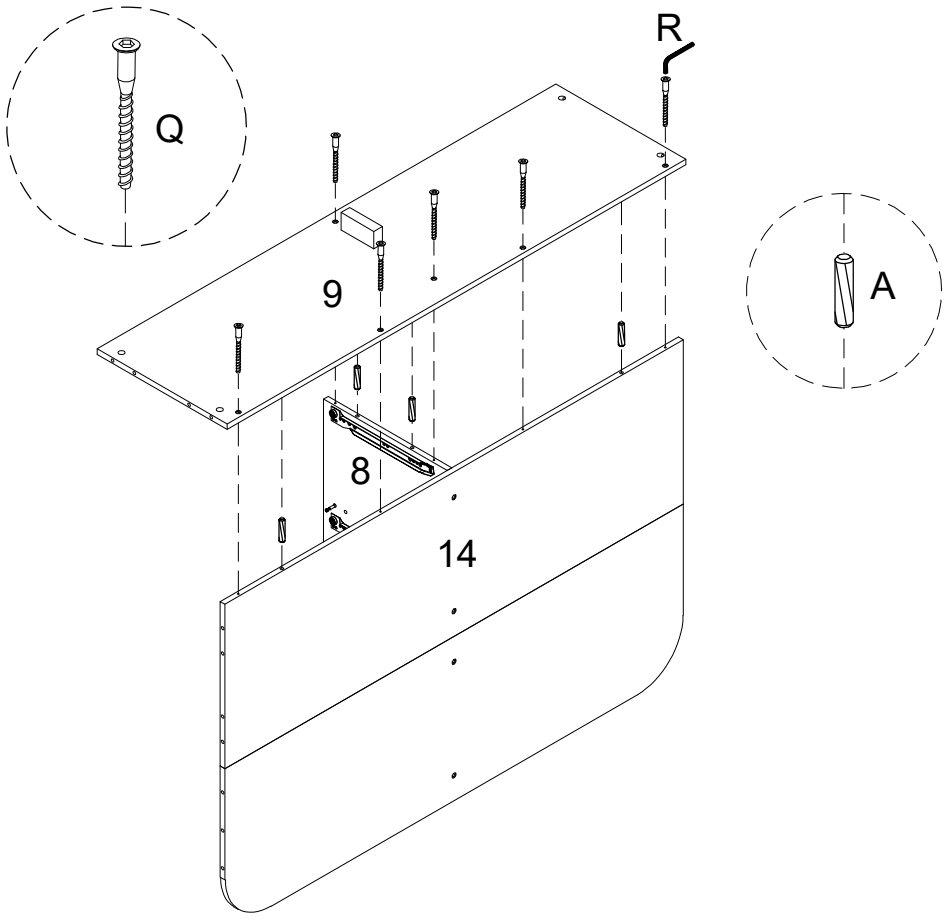

Step 11

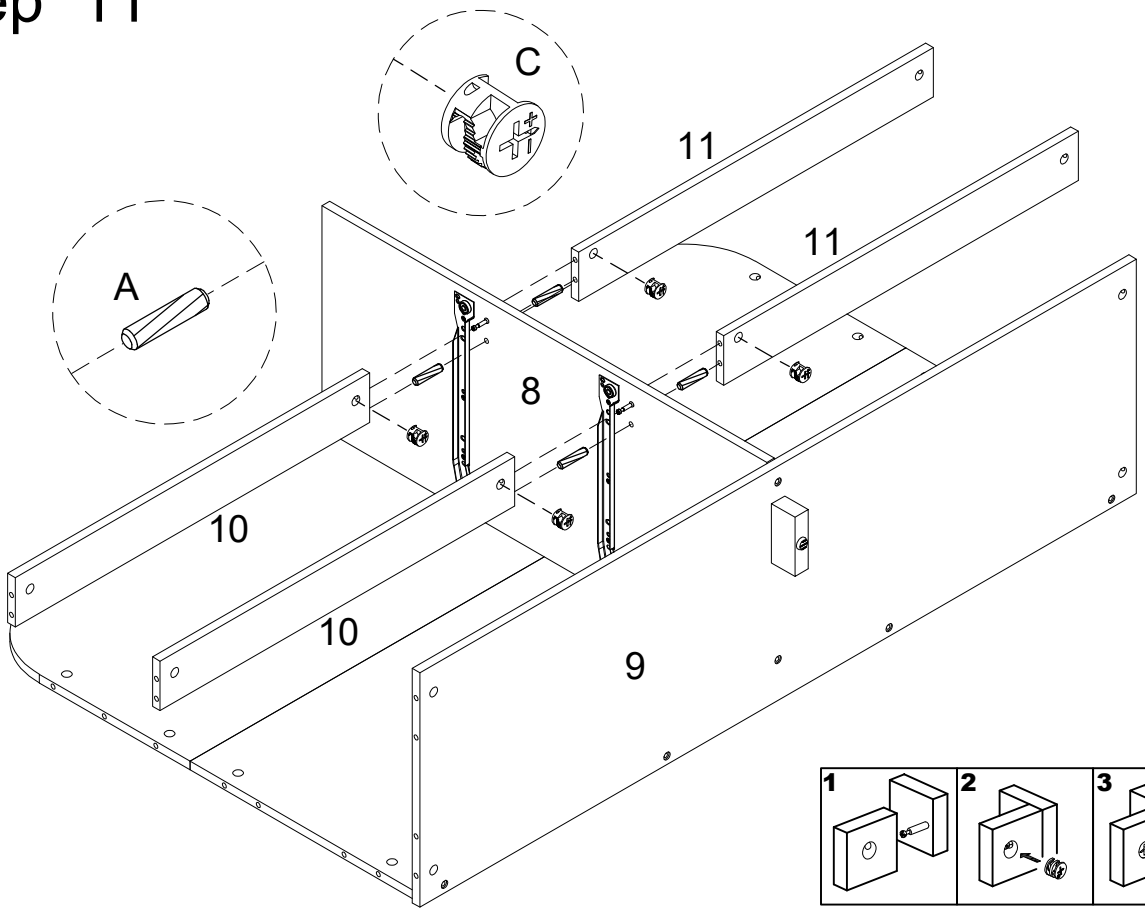

Step 12

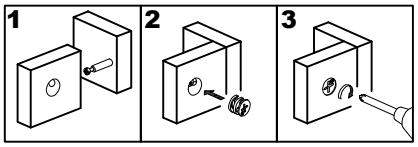

Step 13

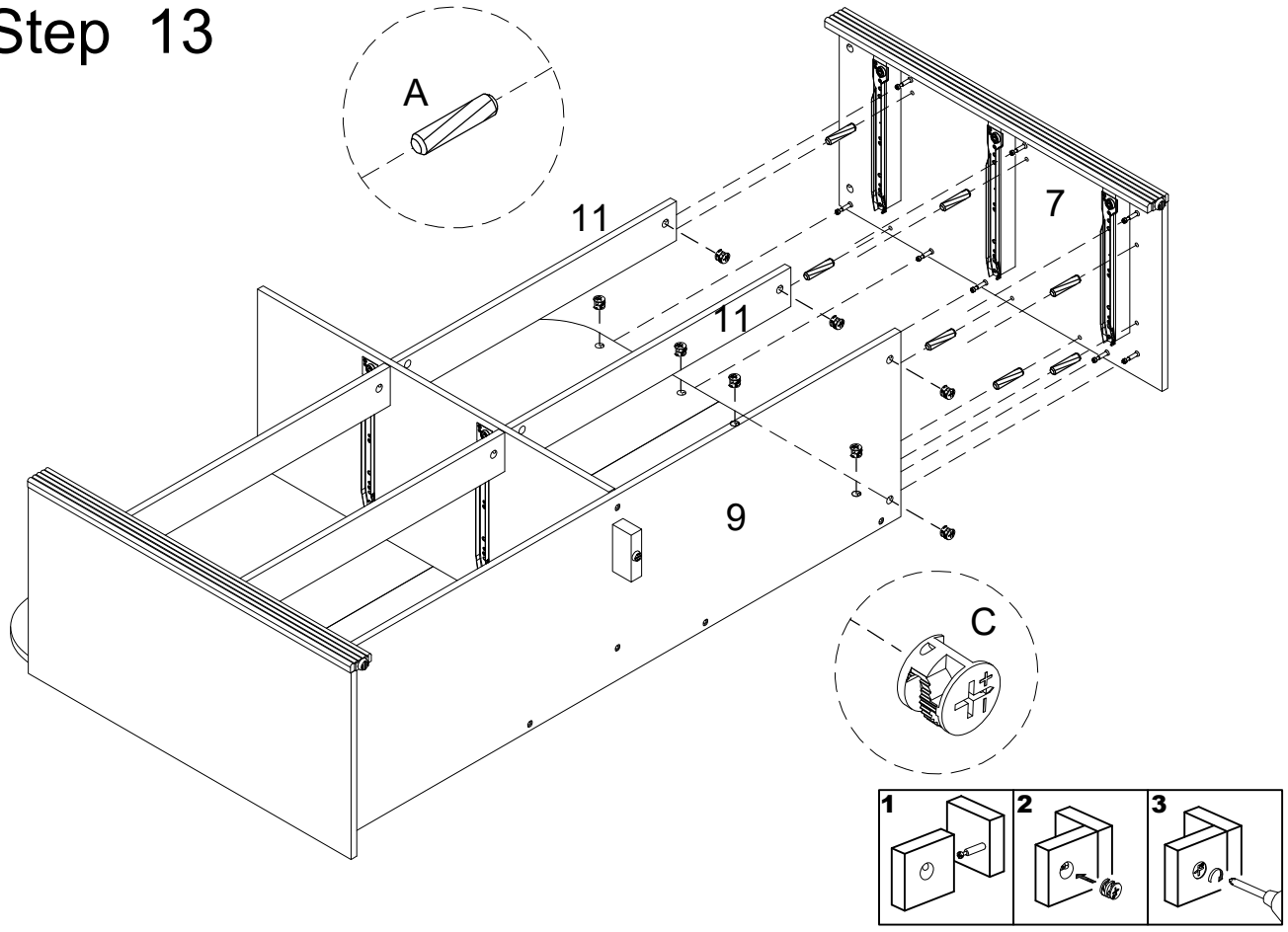

Step 14

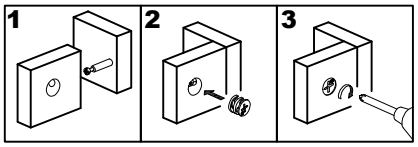

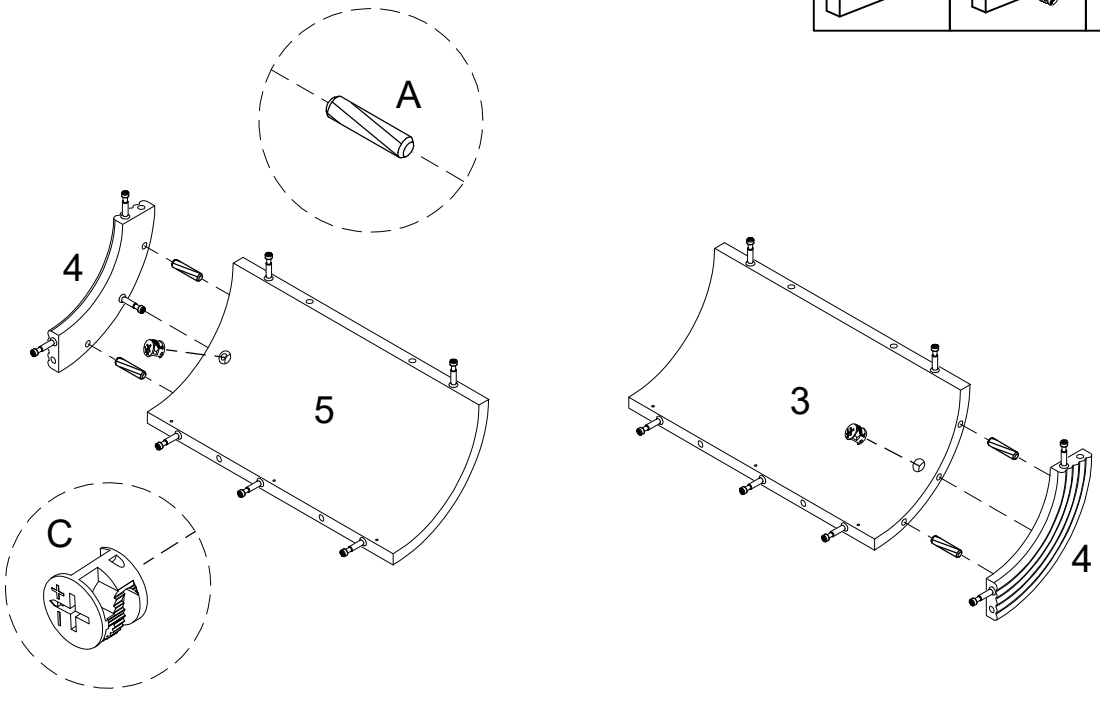

Step 15

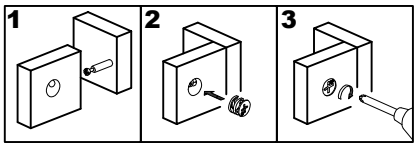

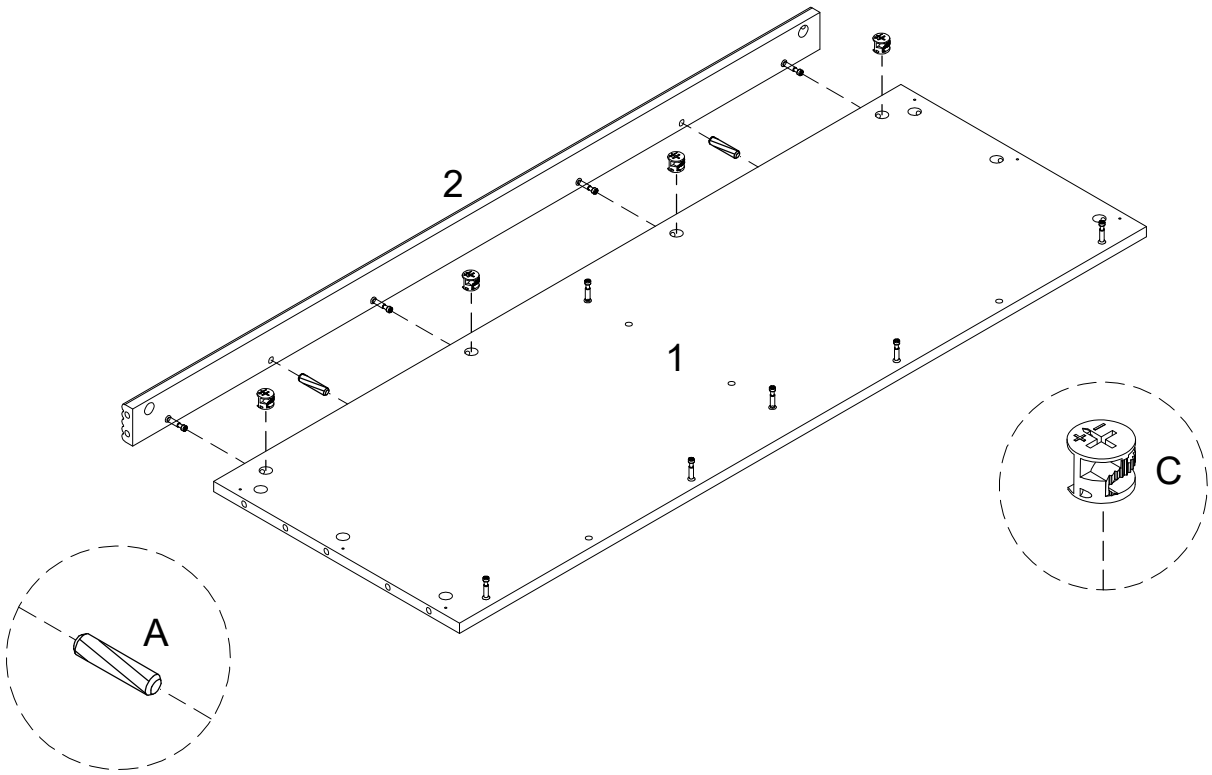

Step 16

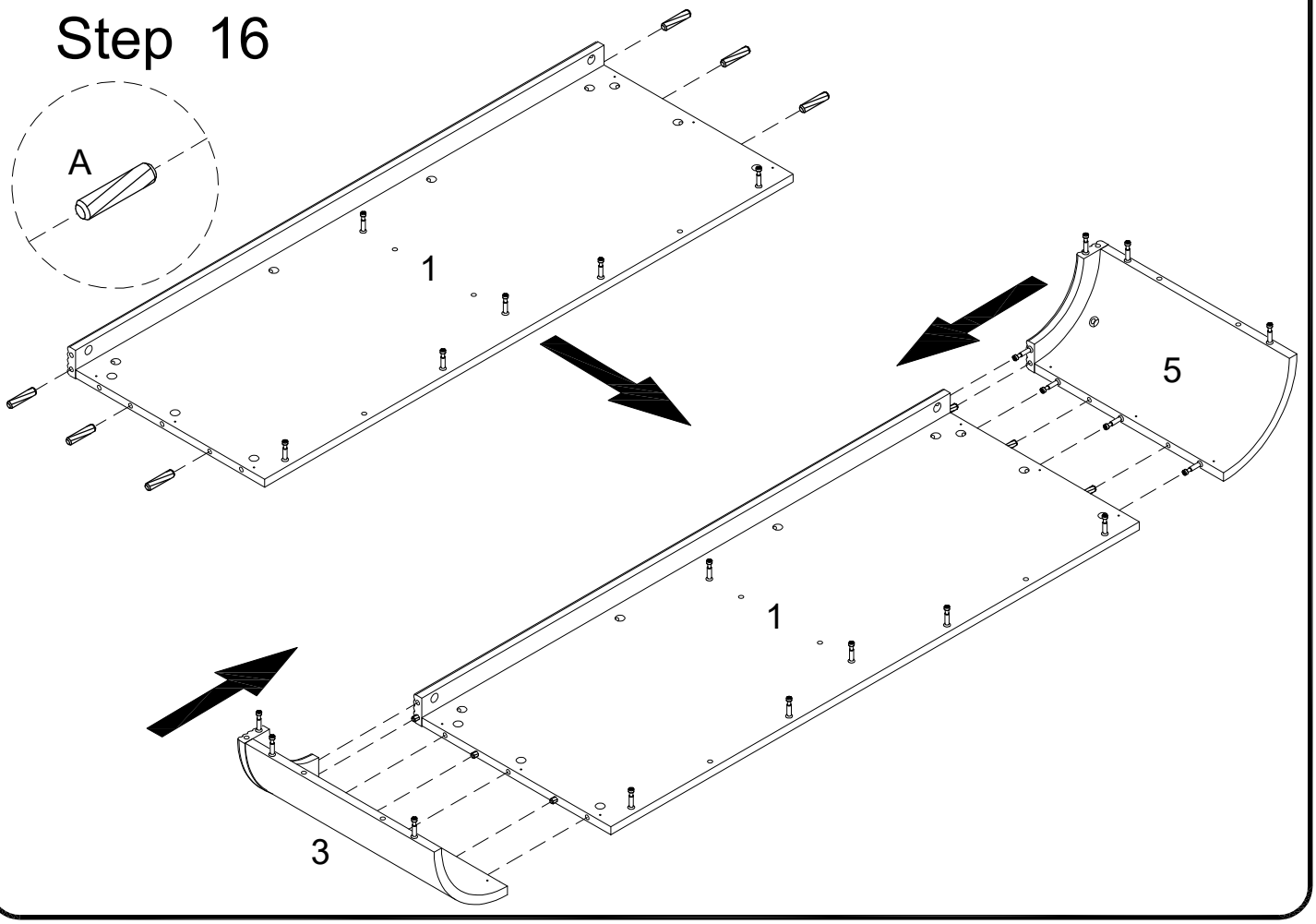

Step 17

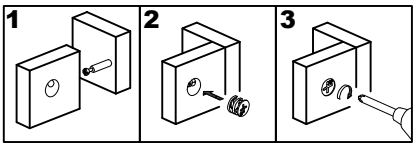

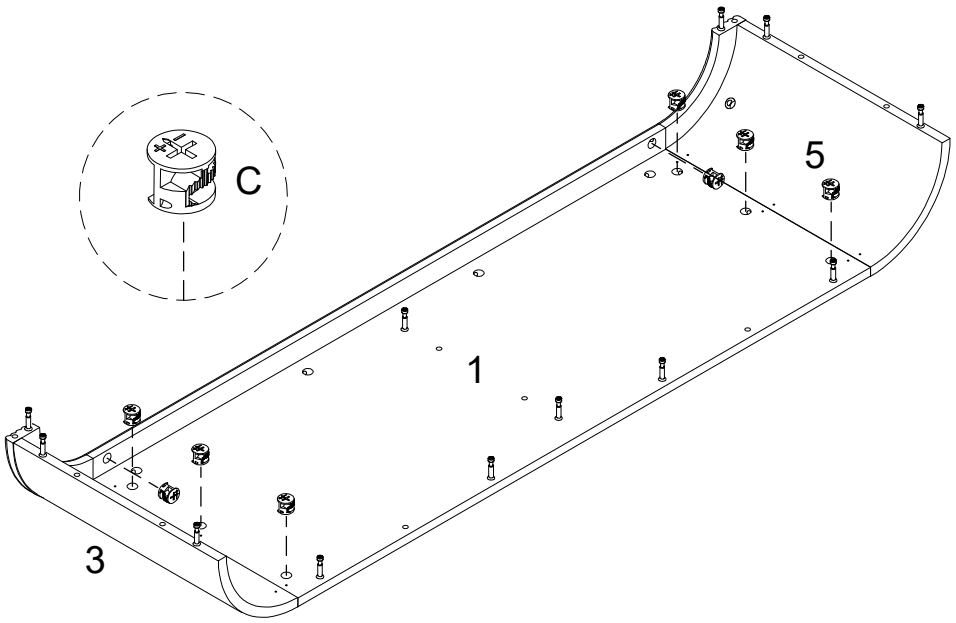

Step 18

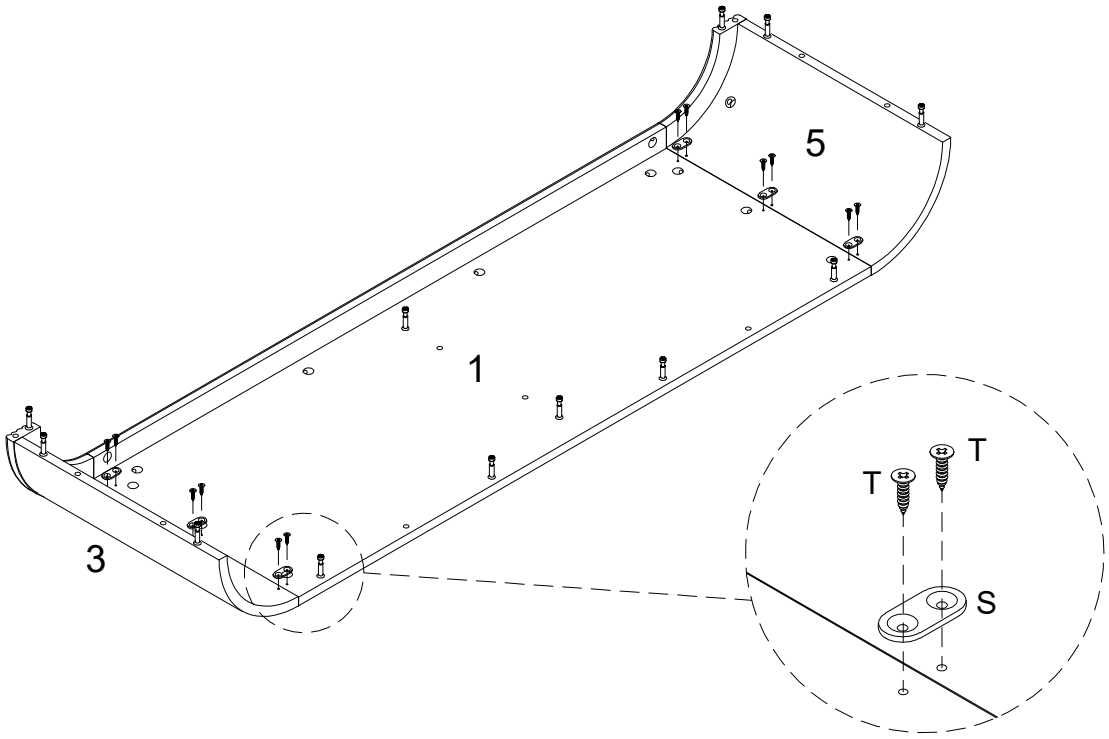

Step 19

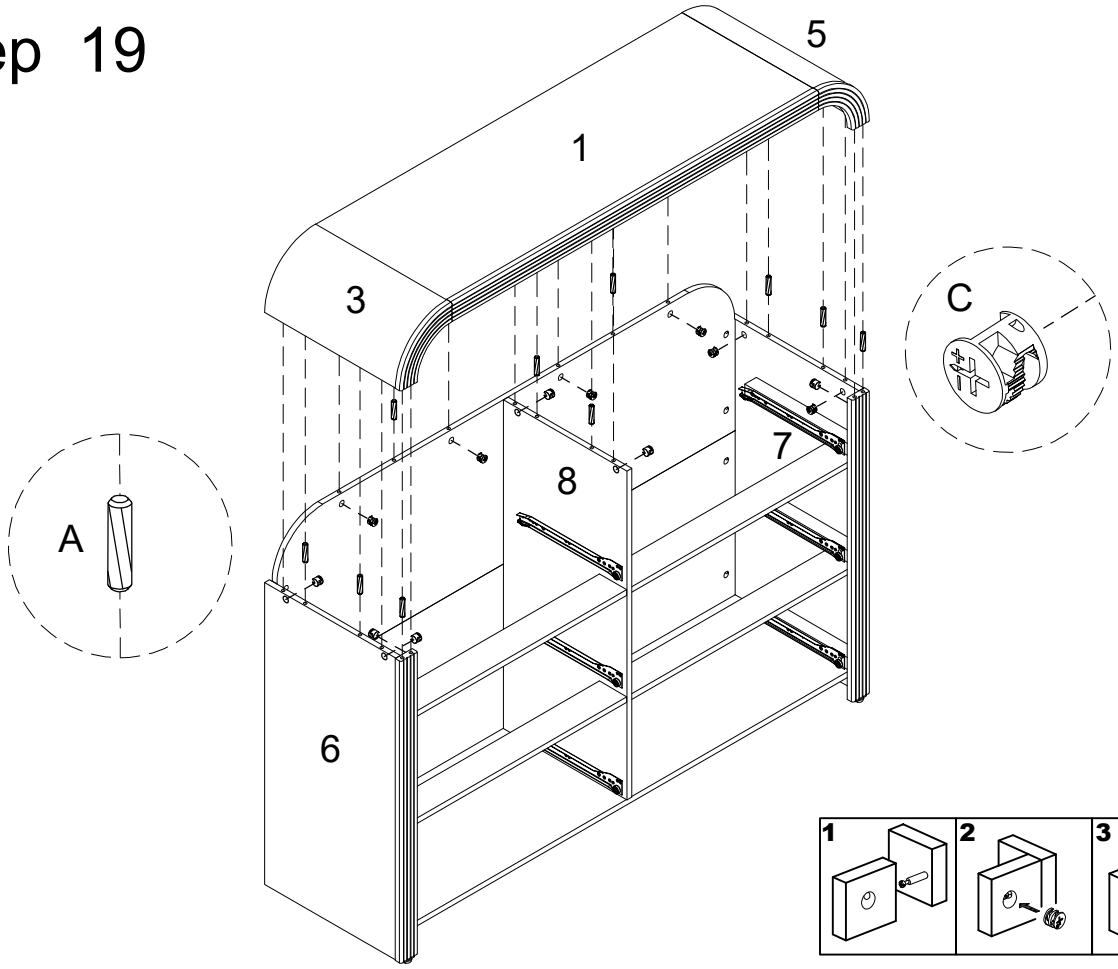

Step 20

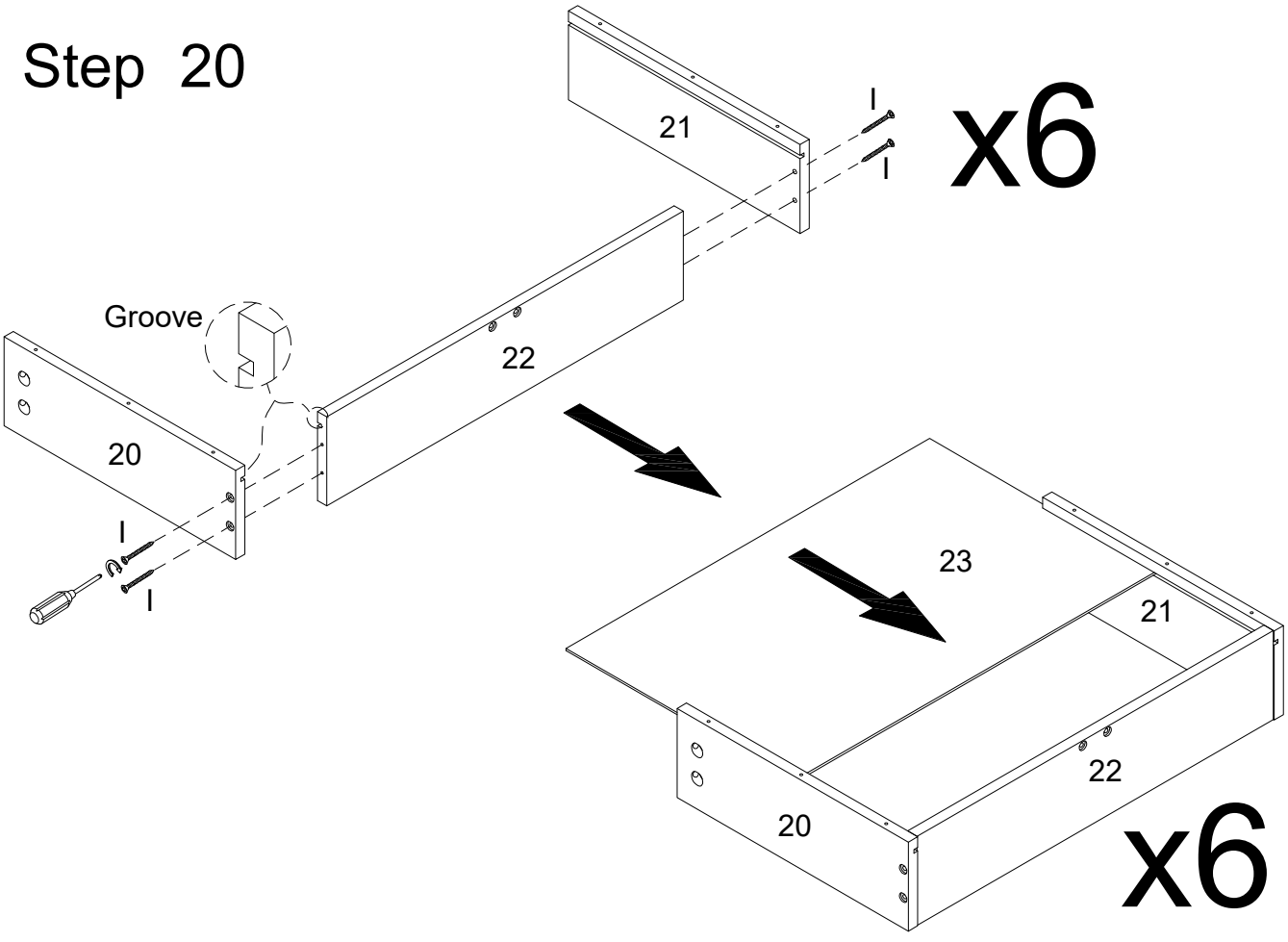

Step 21

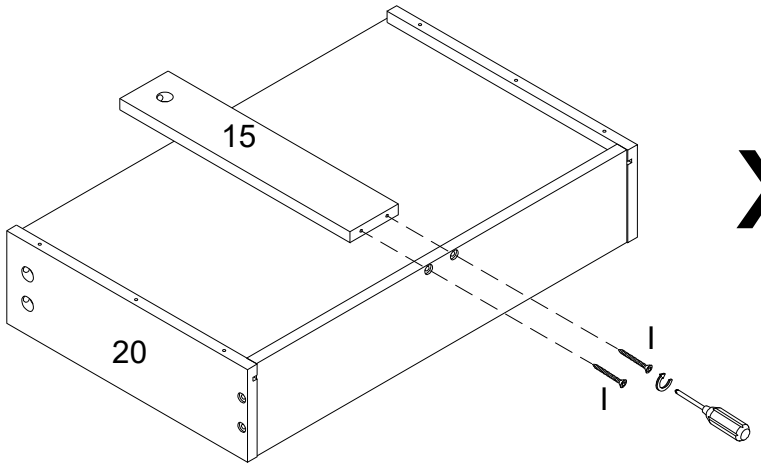

x6

Step 22

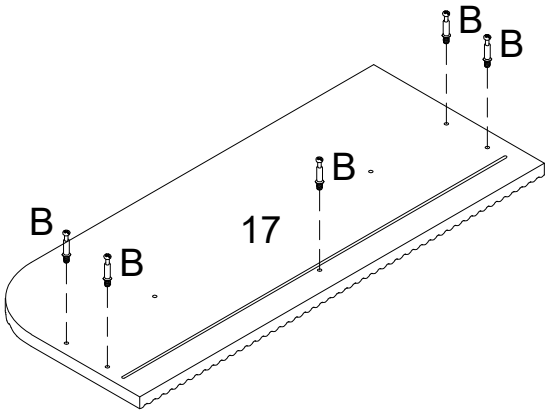

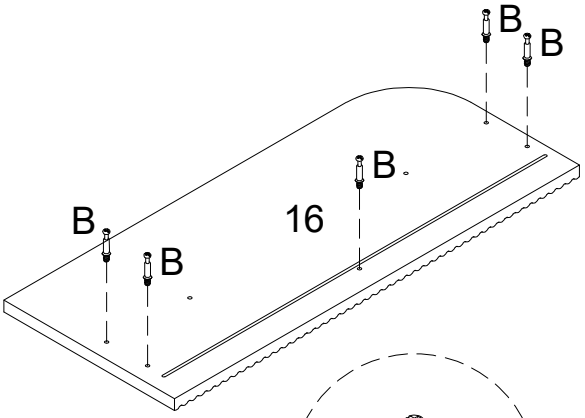

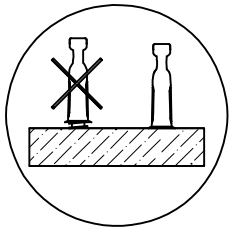

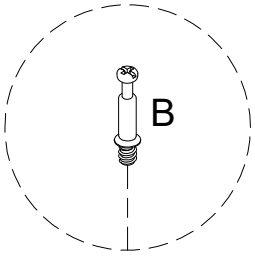

Step 23

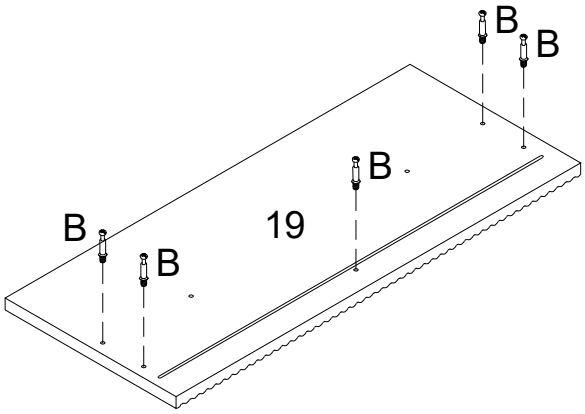

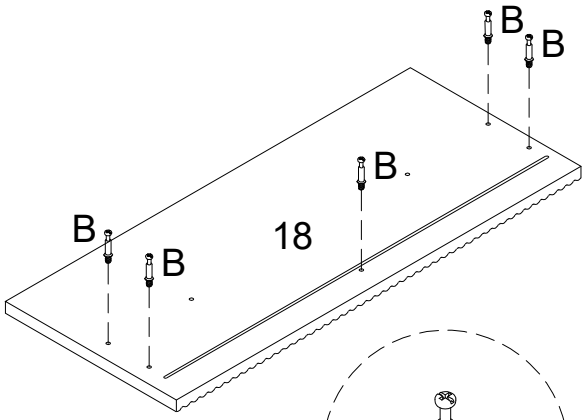

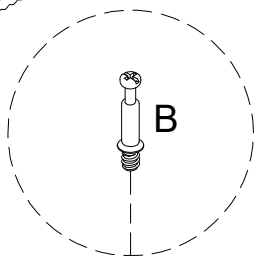

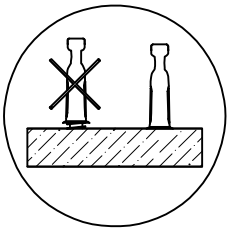

x2

Step 24

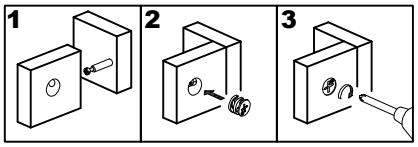

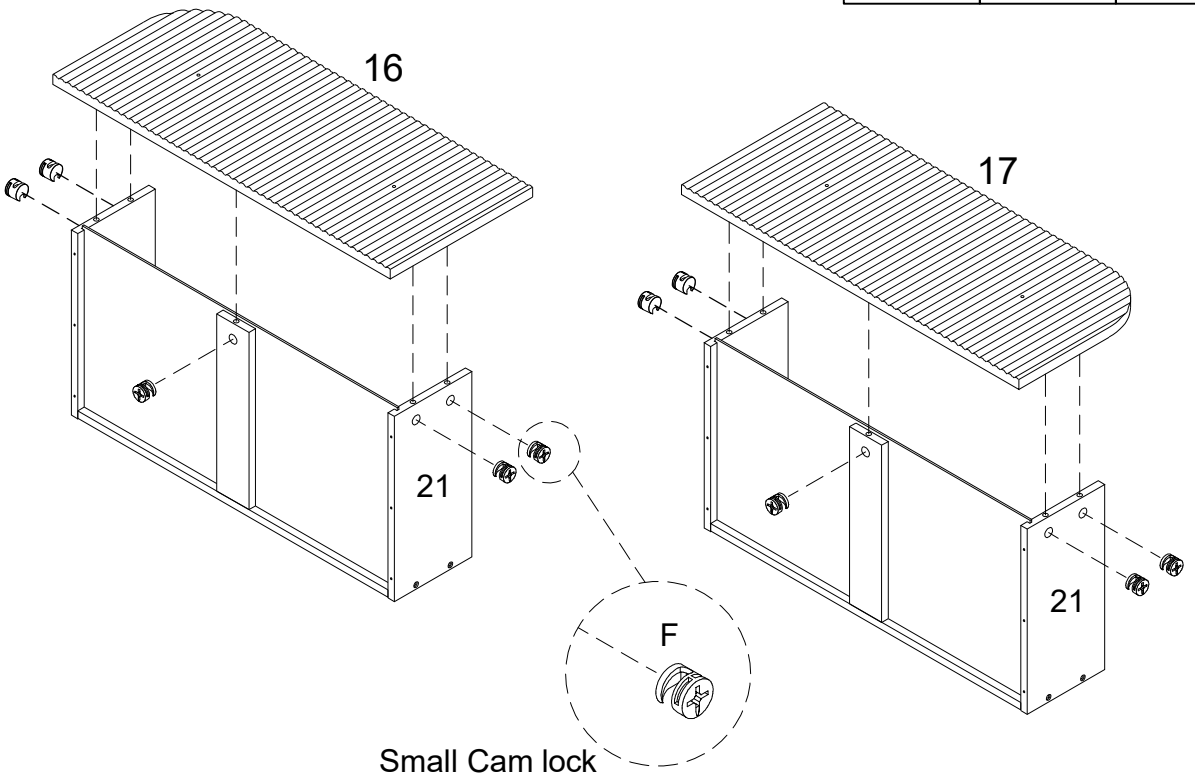

Small Cam lock

Step 25

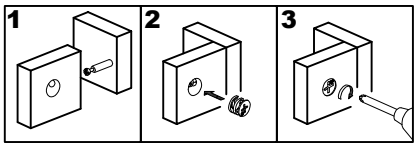

x2

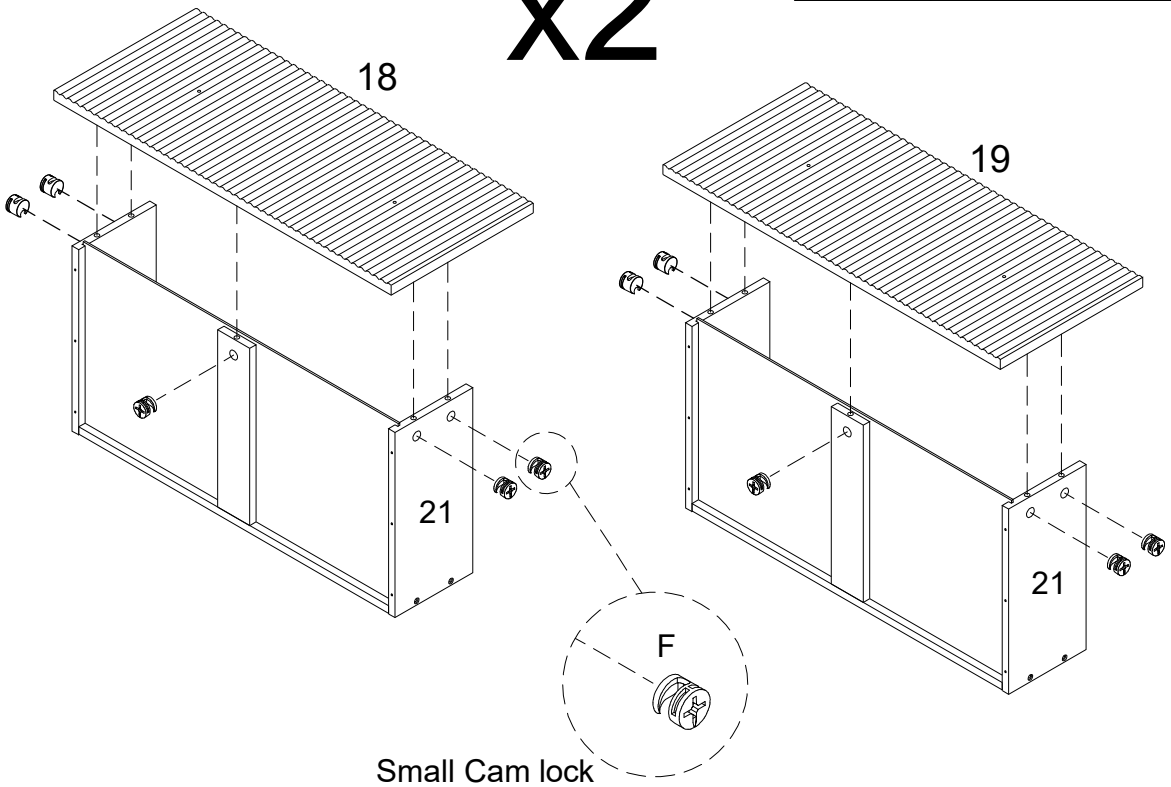

Small Cam lock

Step 26

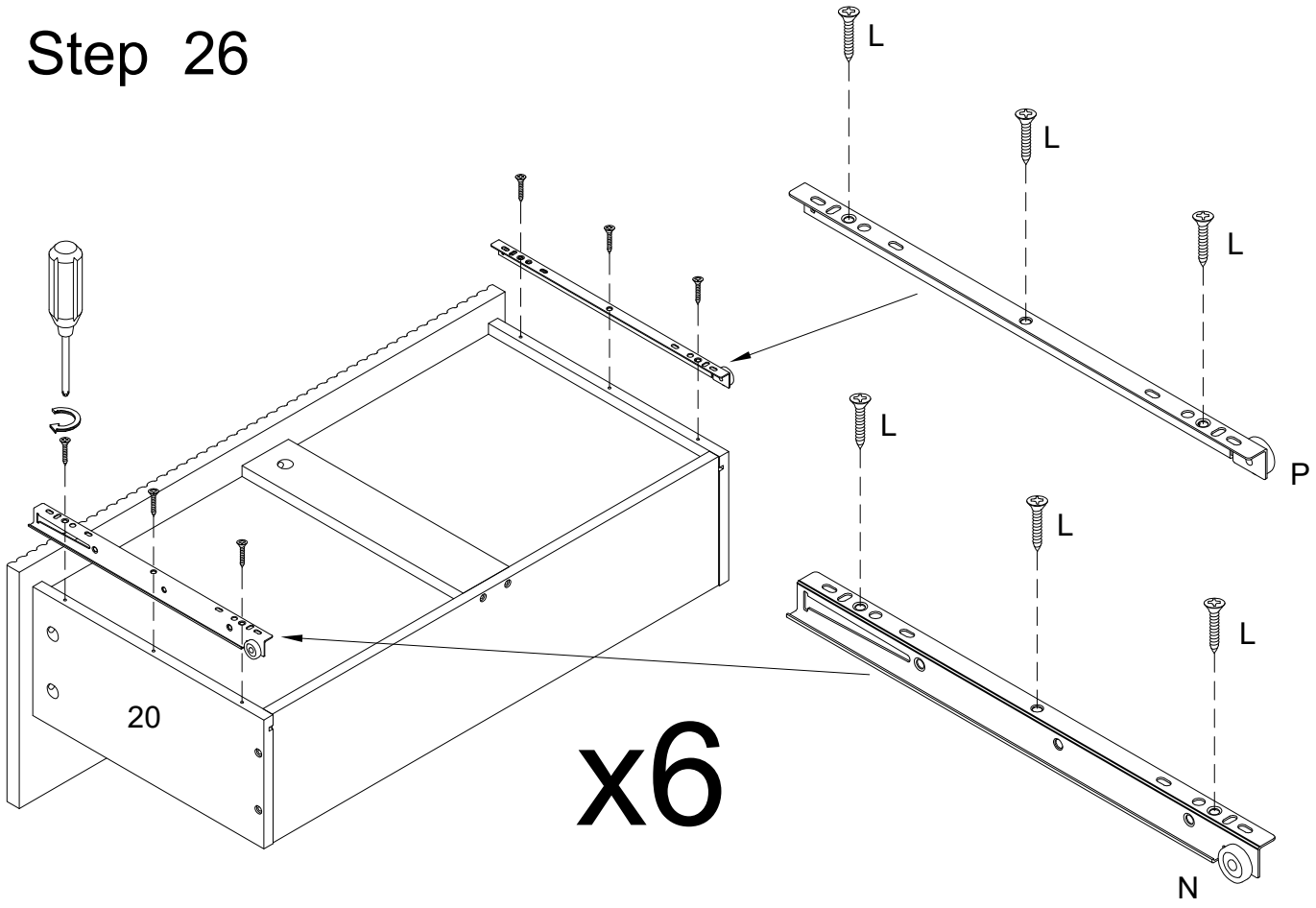

x6

Step 27

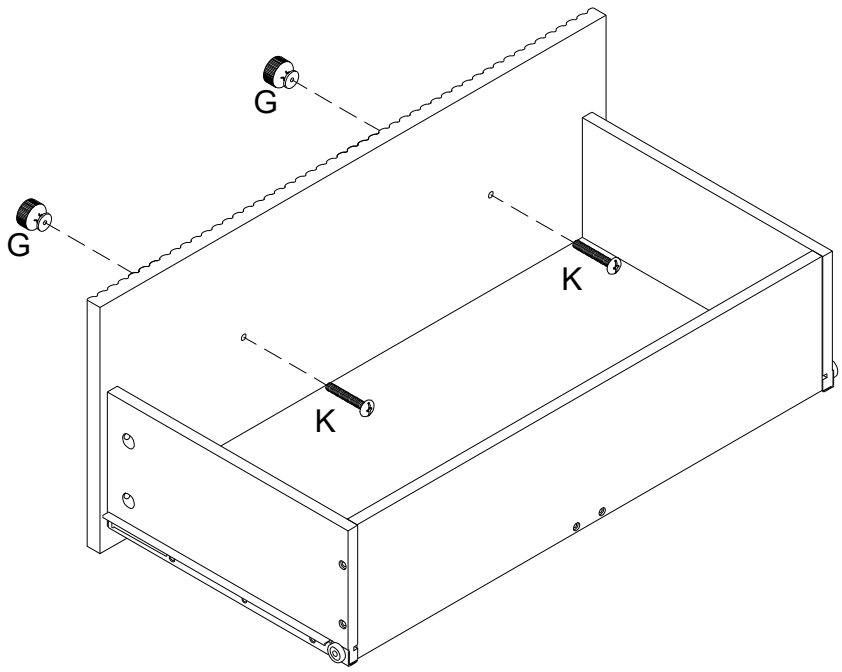

x6

Step 28

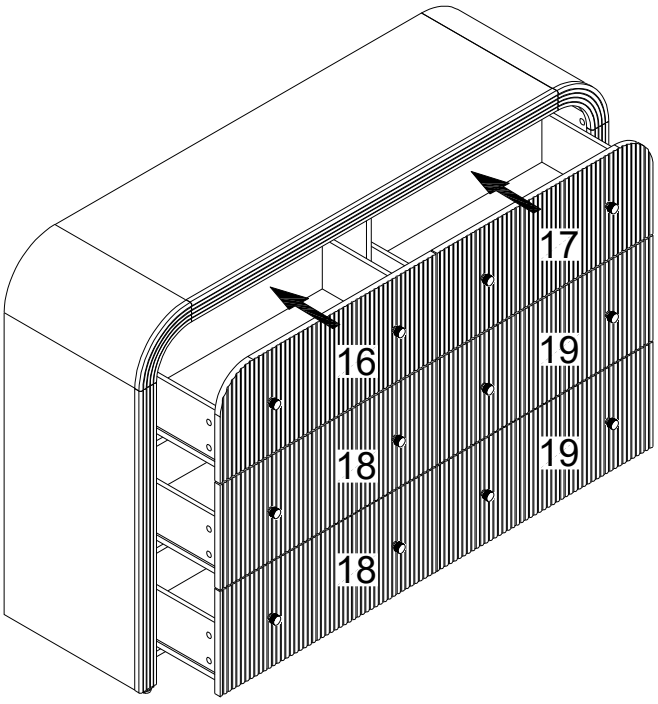

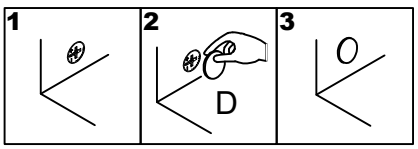

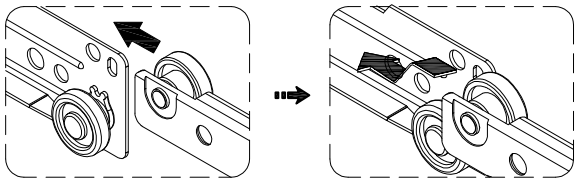

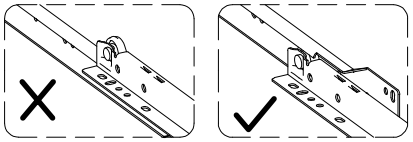

Step 29

Note：It is necessary to assemble the metal plate at the bottom of front legs to keep this unit more stable .

Serious or fatal injuries can occur from furniture tipping over. To prevent the furniture from tipping over we recommend that it is permanently fixed to the wall. Wall anchor and hardware are included with this product. Please make sure hardware is suitable for your walls before installing, as different wall materials may require different types of anchors.

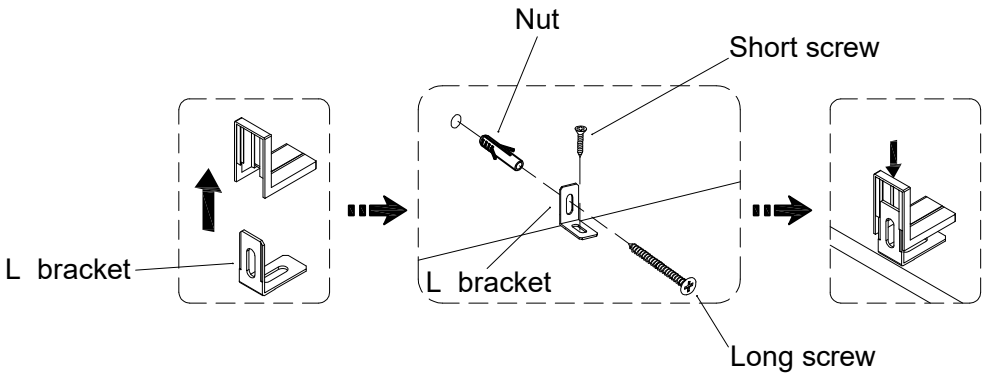

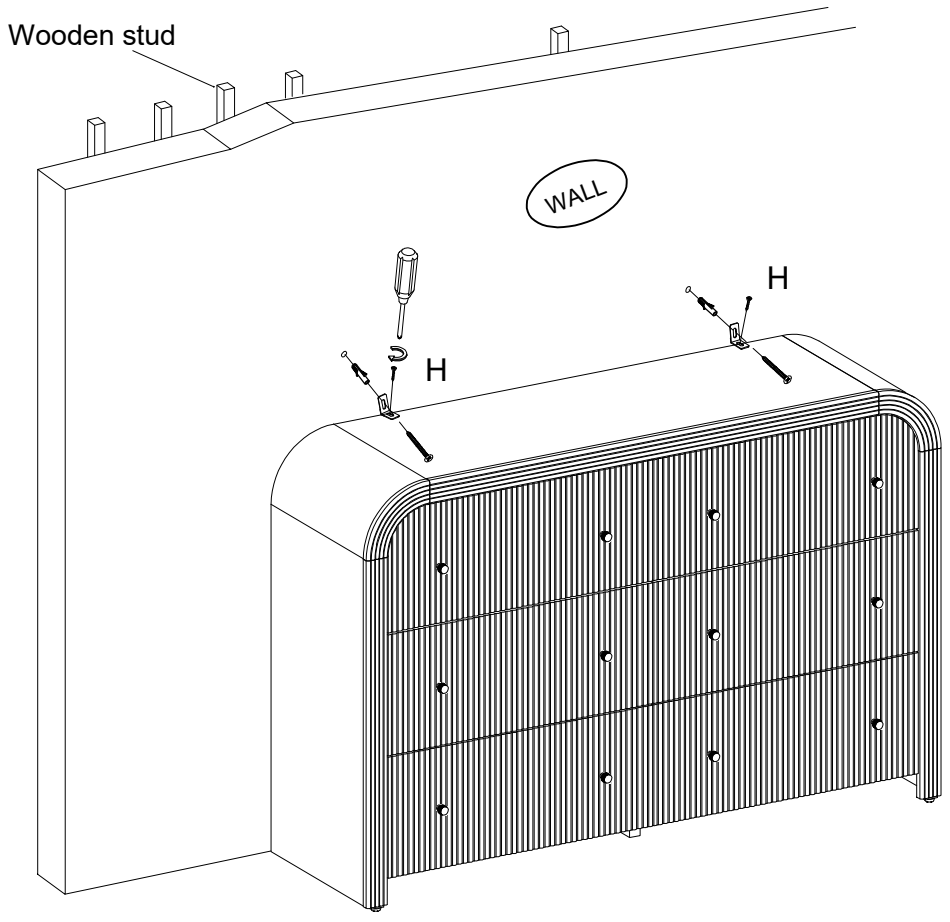

Step 30

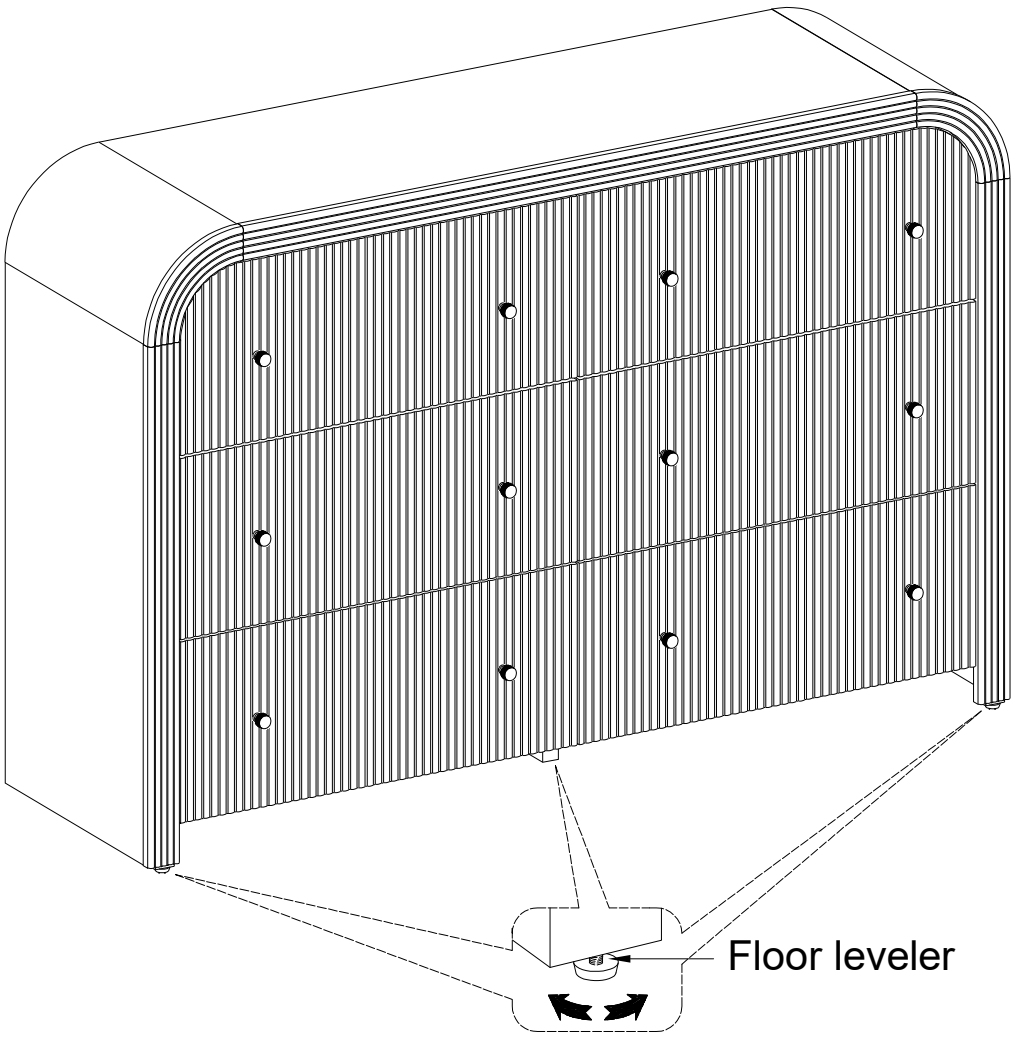

If necessary adjust the floor leveler at the bottom of the Leg to improve the gap around the Drawer.