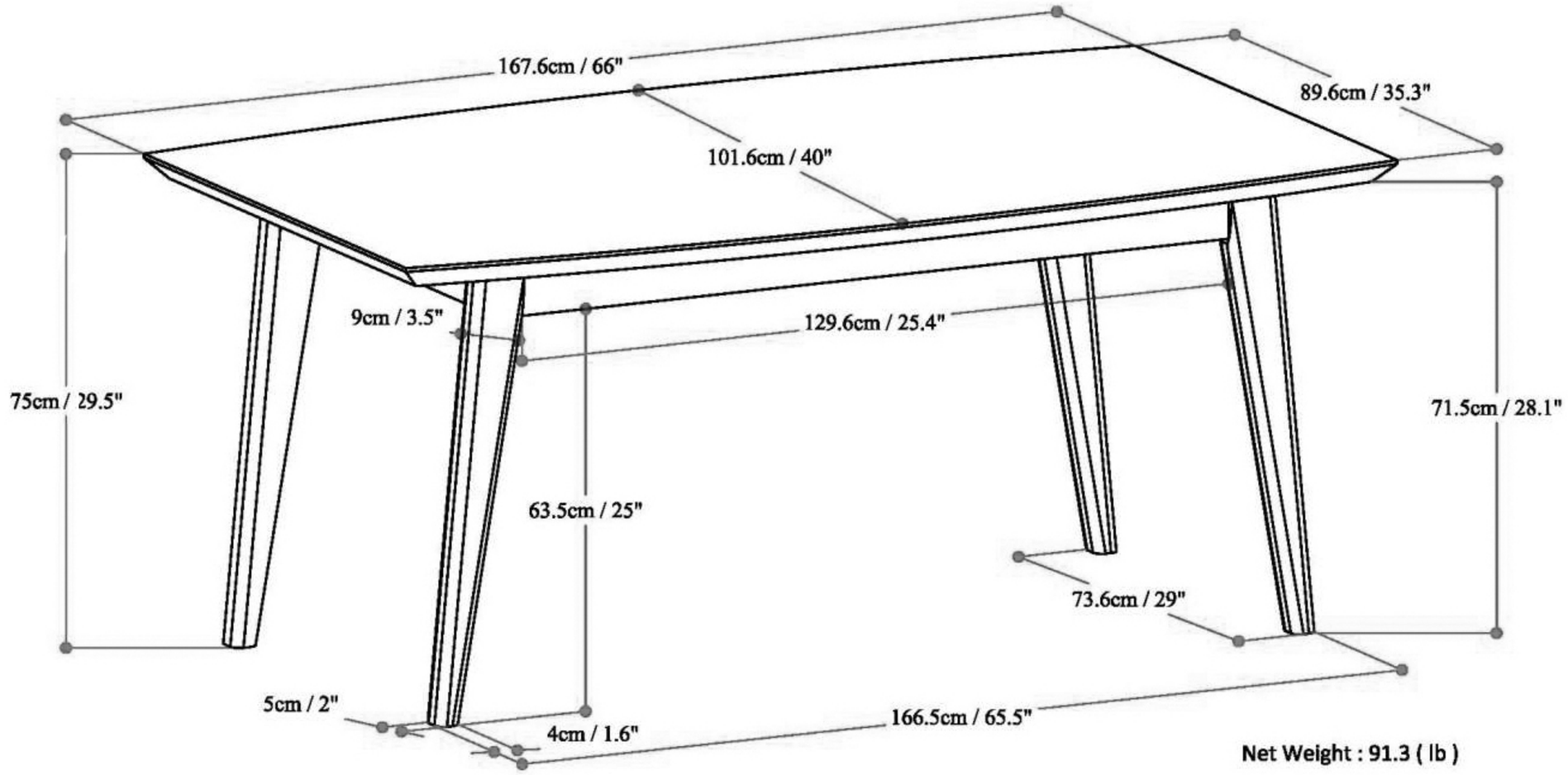

Net Weight : 91.3 (lb)

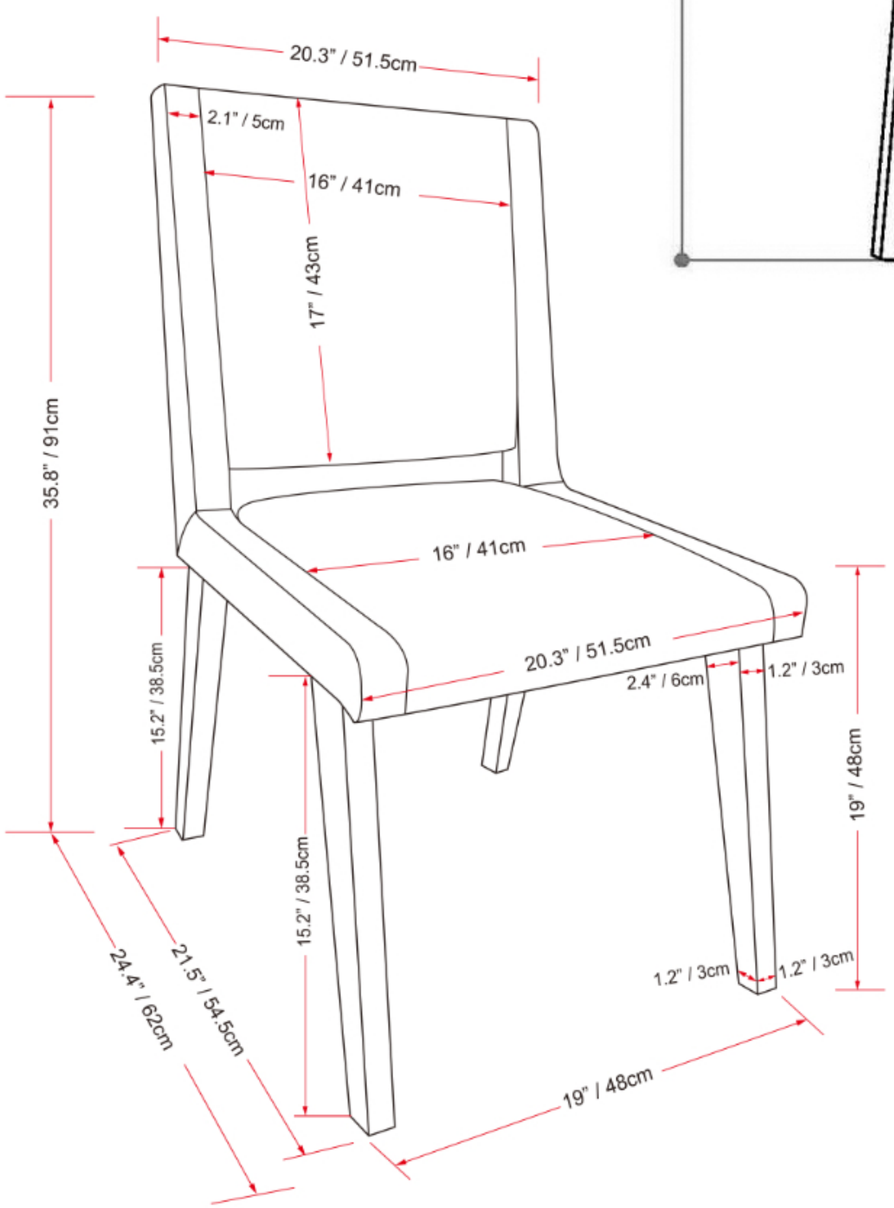

Net Weight: 17.7 lbs