ASSEMBLY INSTRUCTIONS

Torchiere

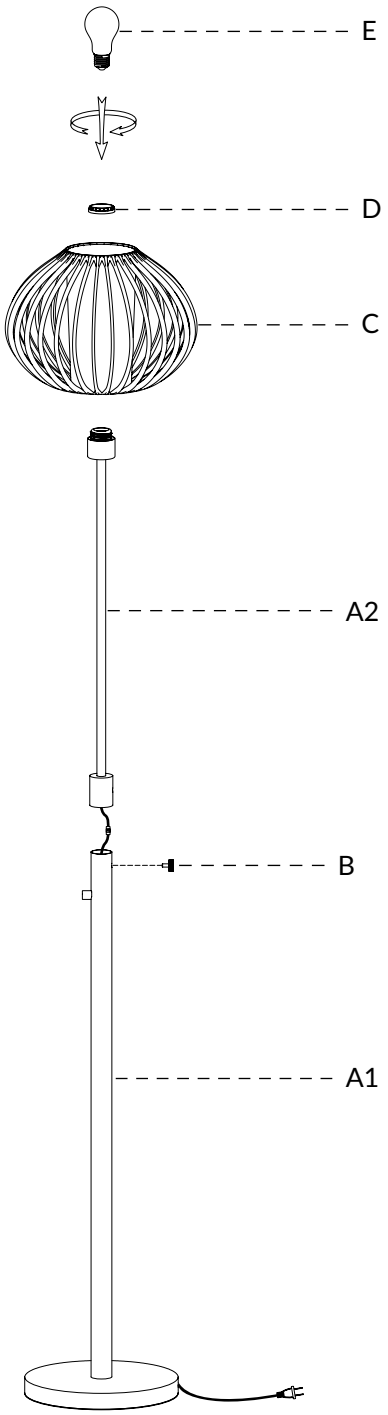

1. Carefully remove all parts from the carton and place them on a clean surface. Please refer to the list of included items inside the carton.
2. Fasten the electrical connectors between the lamp sections (A1 and A2), then assemble the sections and secure with the thumb screw (B).
3. Attach shade (C) to socket of the lamp body (A) and secure with socket ring (D).
4. Insert the light bulb (E) into the socket.
5. Plug into a surge protected 120v outlet and enjoy the beautiful light!

ITEMS INCLUDED / ARTÍCULOS INCLUIDOS				
A	B	C	D	E
LAMP BODY/ CUERPO DE LA LÁMPARA	THUMB SCREW/ TORNILLOS DE MARIPOSA	SHADE/ PANTALLA	SOCKET RING/ ANILLO DE ENCHUFE	LIGHT BULB/ BOMBILLA

IMPORTANT SAFETY INSTRUCTIONS

This lamp has a polarized plug (one blade is wider than the other) as a safety feature to reduce the risk of electric shock. This plug will fit in a polarized outlet only one way. If the plug does not fit fully in the outlet, reverse the plug. If it still does not fit, contact a qualified electrician. Never use with an extension cord unless the plug can be fully inserted. Do not alter the plug.

INSTRUCCIONES DE SEGURIDAD IMPORTANTES

Esta lámpara tiene un enchufe polarizado (una de las clavijas es más ancha que la otra) como medida de seguridad para reducir el riesgo de descarga eléctrica. Este enchufe solo encaja en una toma de corriente polarizada de una sola manera. Si el enchufe no entra completamente en la toma, gírelo. Si aun así no encaja, contacte con un electricista cualificado. No lo utilice nunca con un cable de extensión a menos que el enchufe pueda insertarse completamente. No modifique el enchufe.