# KIDS SLIDE

Instruction manual

FE-HT-SDW05

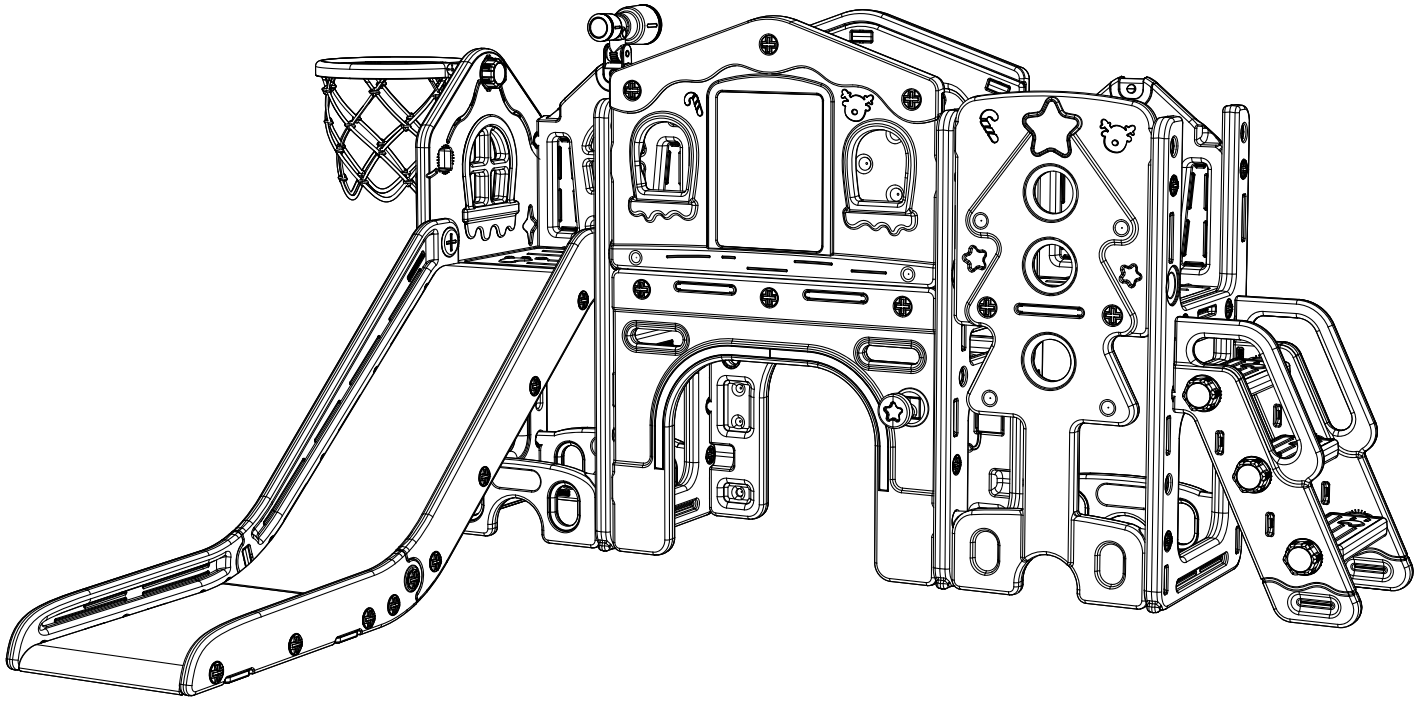

**E-mail Service : toddlerslide@gmail.com**

Please read and keep the manual properly, it contains important information.

# MAINTENANCE INSTRUCTIONS

1. Check the product regularly to prevent loose and broken components.
2. Use mild soap and water for daily cleaning.
3. The following examinations are required at the beginning of each season (twice a month)

(1)Check if any parts are missing or broken.

(2)Check if all the connection parts are tight.

# ⚠ WARNING

1. CHOKING HAZARD-Small parts. Sharp points. Only adults assemble it, and the product should be used under the supervision of an adult.
2. Children on this product should not wear scarves, gloves, cloaks, or any clothes with long strips.
3. Children on this product should not wear a necklace or hang anything around the neck.
4. MAKE SURE the surface of the product is dry and free of foreign objects before use. Stay away from fire.
5. MAKE SURE all the connection parts are tightly assembled before allowing children to play on it.
6. DO NOT cut, heat, or change the shape of the product.
7. DO NOT use jump rope, clothes line, etc., to hang items not specially designed for this product.
8. DO NOT place the product in direct sunlight to reduce the risk of sunburn.
9. DO NOT use the product in an unintended way.
10. DO NOT use the product when it is wet or on a snow day.
11. Falling onto a hard surface like a concrete floor may cause severe injury or even death. Close supervision is required for adults during use.
12. Stop using the product when the temperature is below 32°F (0℃ ). Because the plastic material may become more fragile and easier to break.
13. Attached stickers must be applied by an adult.

# ⚠BATTERY WARNINGS

**⚠ DANGER** **Risk of explosion!**

Risk of explosion if the battery is replaced by an incorrect type.

**Please strictly observe the following use warnings, misuse or abuse may result in leakage, rupture, or fire, and may cause personal injury.**

- Do not mix old and new batteries.
- Do not mix different types of batteries.
- Insert batteries with the correct polarity.
- Remove exhausted batteries from the toy.
- Follow the battery manufacturer's warnings and recommendations.
- Never attempt to recharge primary batteries.
- Never short circuit batteries as this may lead to high temperatures, leakage, or rupture.
- Never heat batteries to revive them.
- Remember to switch off the toy after use.
- Never attempt to disassemble, crush, puncture, or open batteries.
- Keep batteries out of the reach of children, especially small batteries that could be easily ingested.
- Clean the battery contacts and also those of the device before battery installation.
- Remove batteries from the toy that is not to be used for an extended period. Remove used batteries promptly.

# BEFORE FIRST USE

**⚠ DANGER** **Risk of suffocation!**

**Keep any packaging materials away from children and pets-these materials are a potential source of danger, e.g. suffocation.**

- Remove all the packing materials.
- Remove and review all components before starting assembly.
- Check the toy for transport damages.

# INFORMATION BEFORE ASSEMBLING

## Check if following spare parts are in the box:

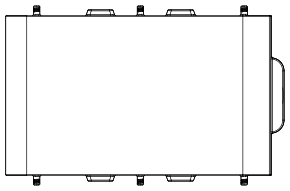

① x1

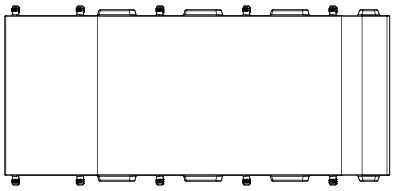

② x1

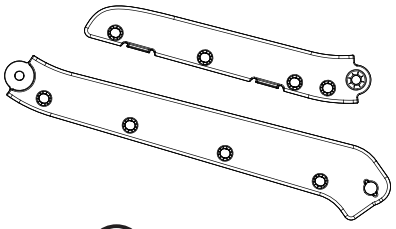

③ x2 pair

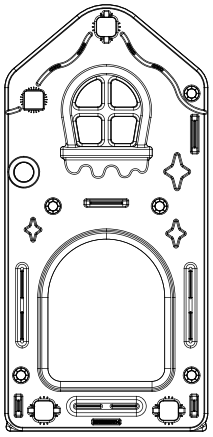

④ x1

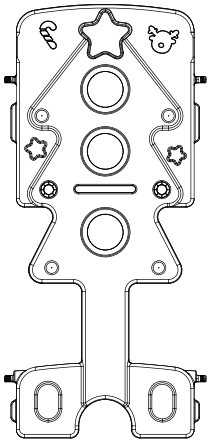

⑤ x1

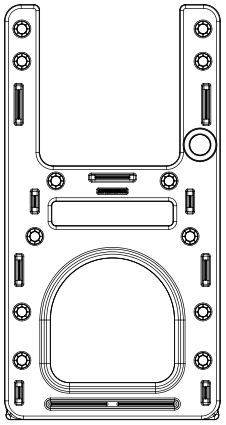

⑥ x3

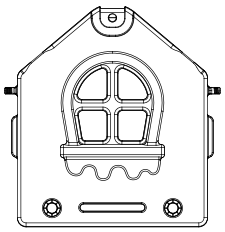

⑦ x2

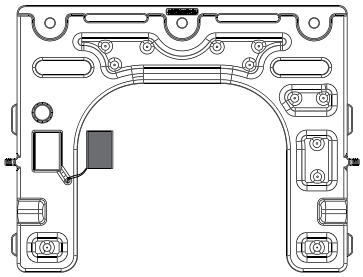

⑧ x1 (With Lights)

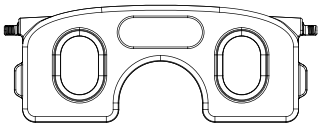

⑨ x3

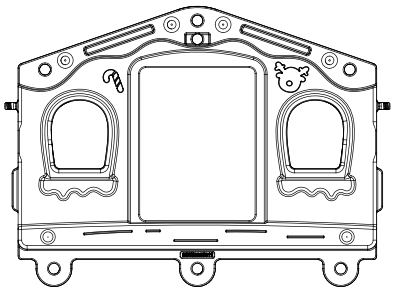

⑩ x2

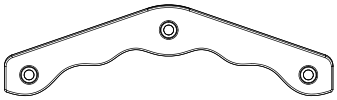

⑪ x2

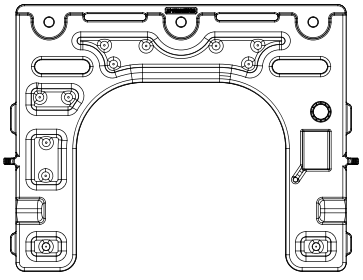

⑫ x1 (Without lights)

# INFORMATION BEFORE ASSEMBLING

## Check if following spare parts are in the box:

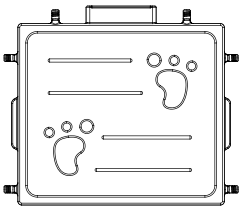

⑬ x1

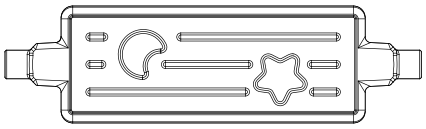

⑭ x3

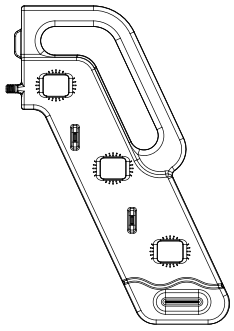

⑮ x2

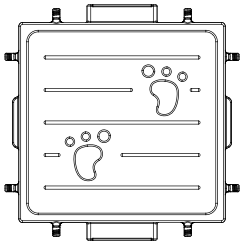

⑯ x1

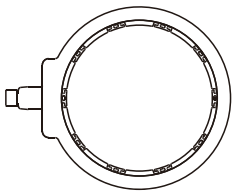

⑰ x1

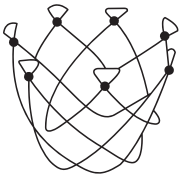

⑱ x1

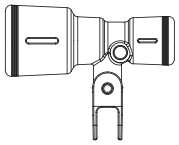

⑲ x1

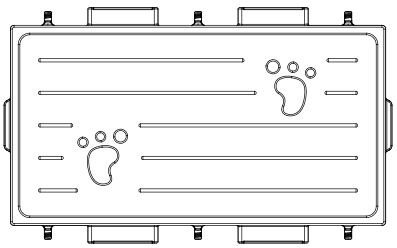

⑳ x1

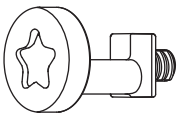

㉑ x1

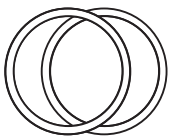

㉒ x4



㉓ x1

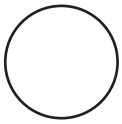

㉔ x1(Ball)

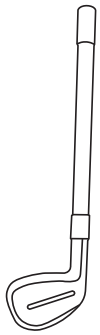

㉕ x1



㉖ x1(Sticker)

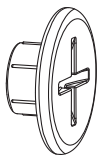

㉗ x2

# INFORMATION BEFORE ASSEMBLING

**Check if following spare parts are in the box:**

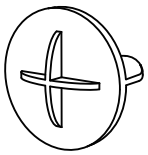

28 x1

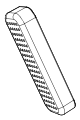

29 x4



30 x68



31 x1

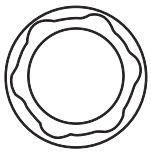

32 x7

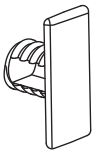

33 x8

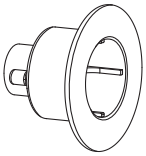

34 x2

# ⚠ HOW TO ASSEMBLE SCREWS

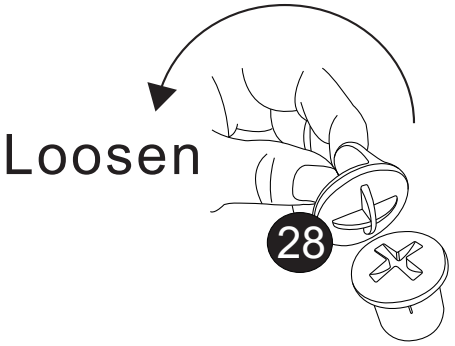


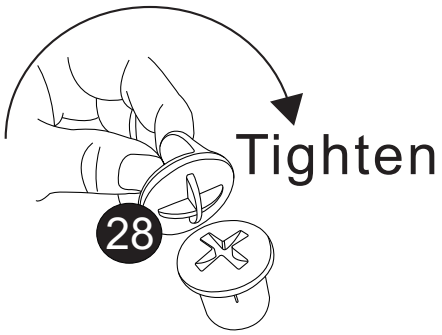

# ASSEMBLING

## STEP 1

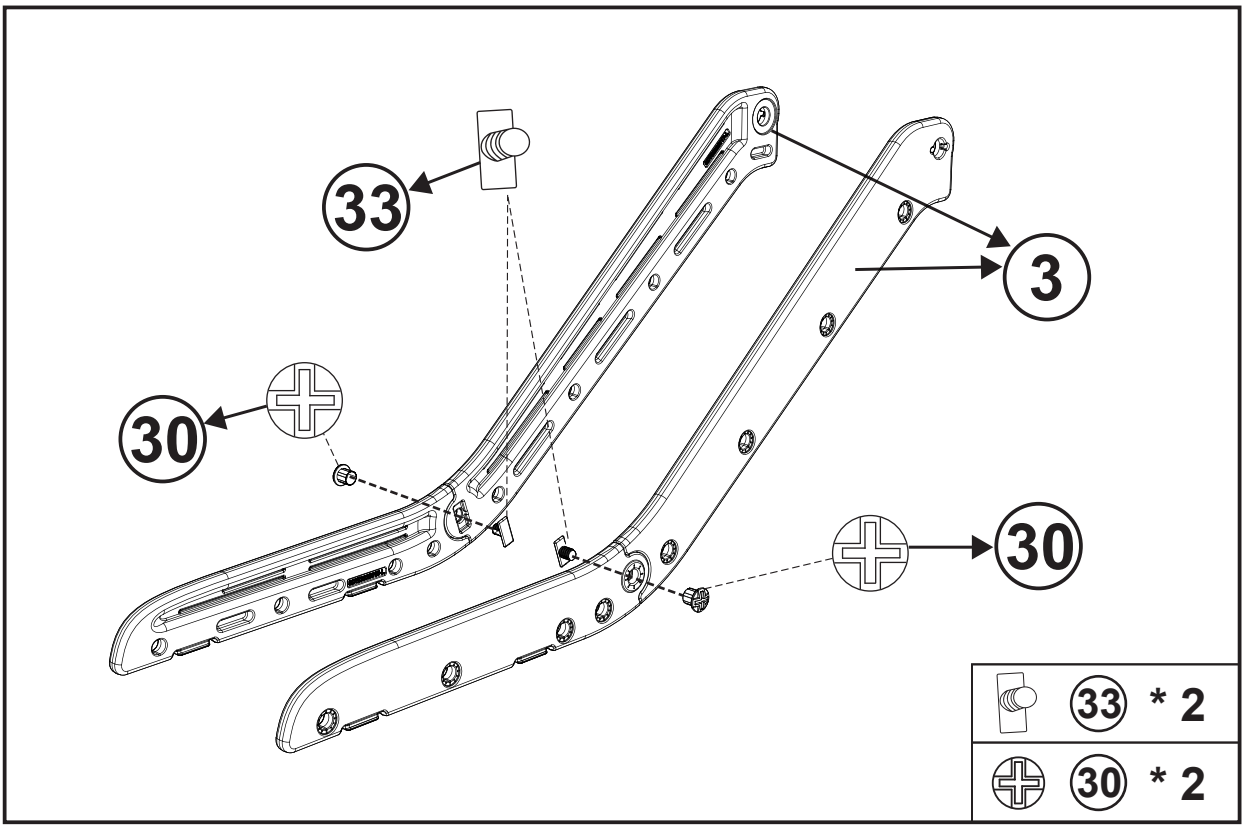


## STEP 2

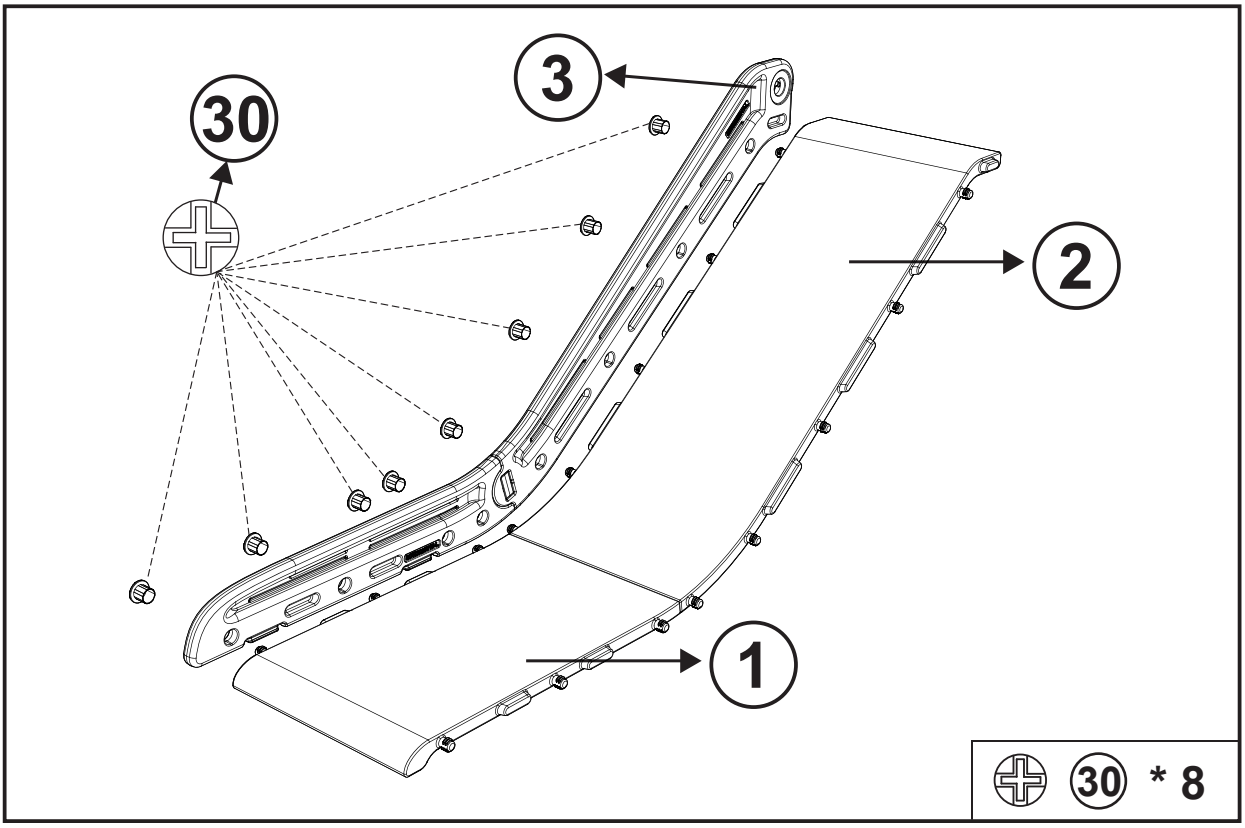

# ASSEMBLING

## STEP 3

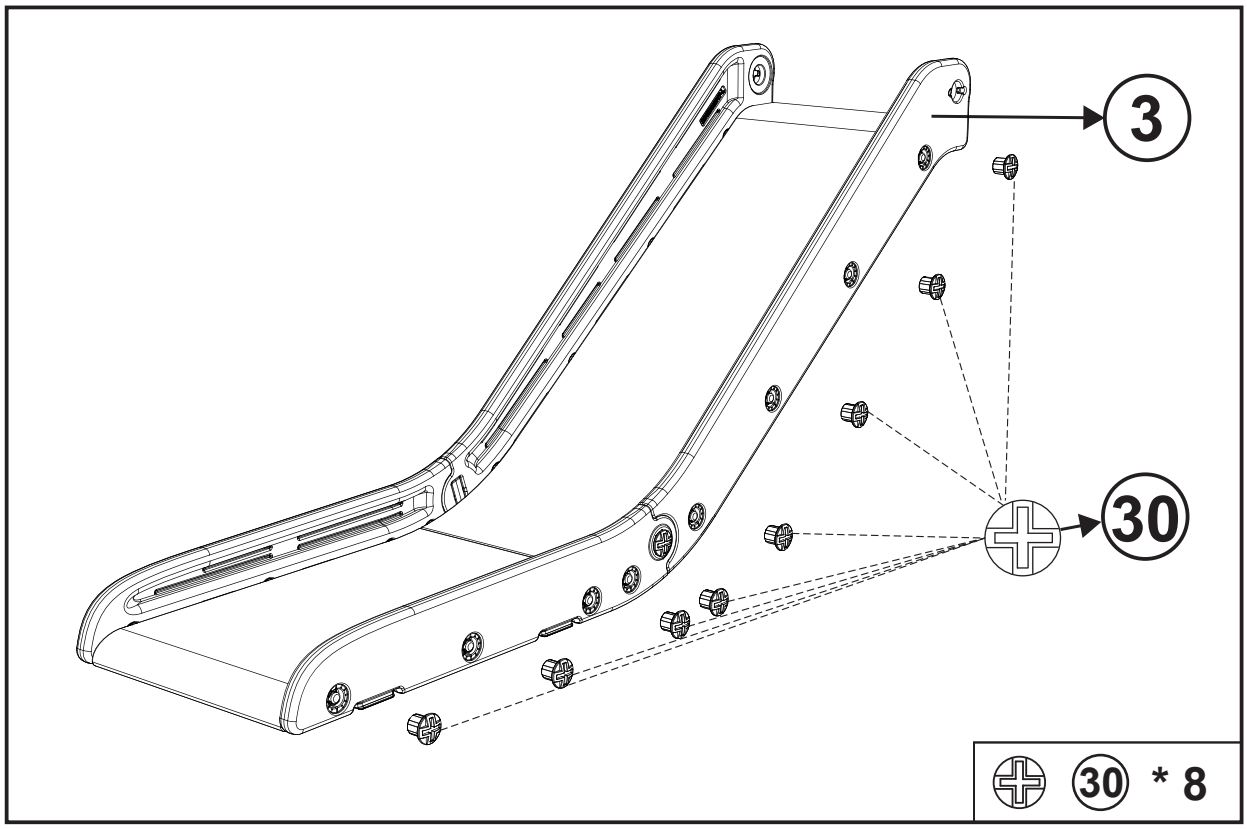


## STEP 4

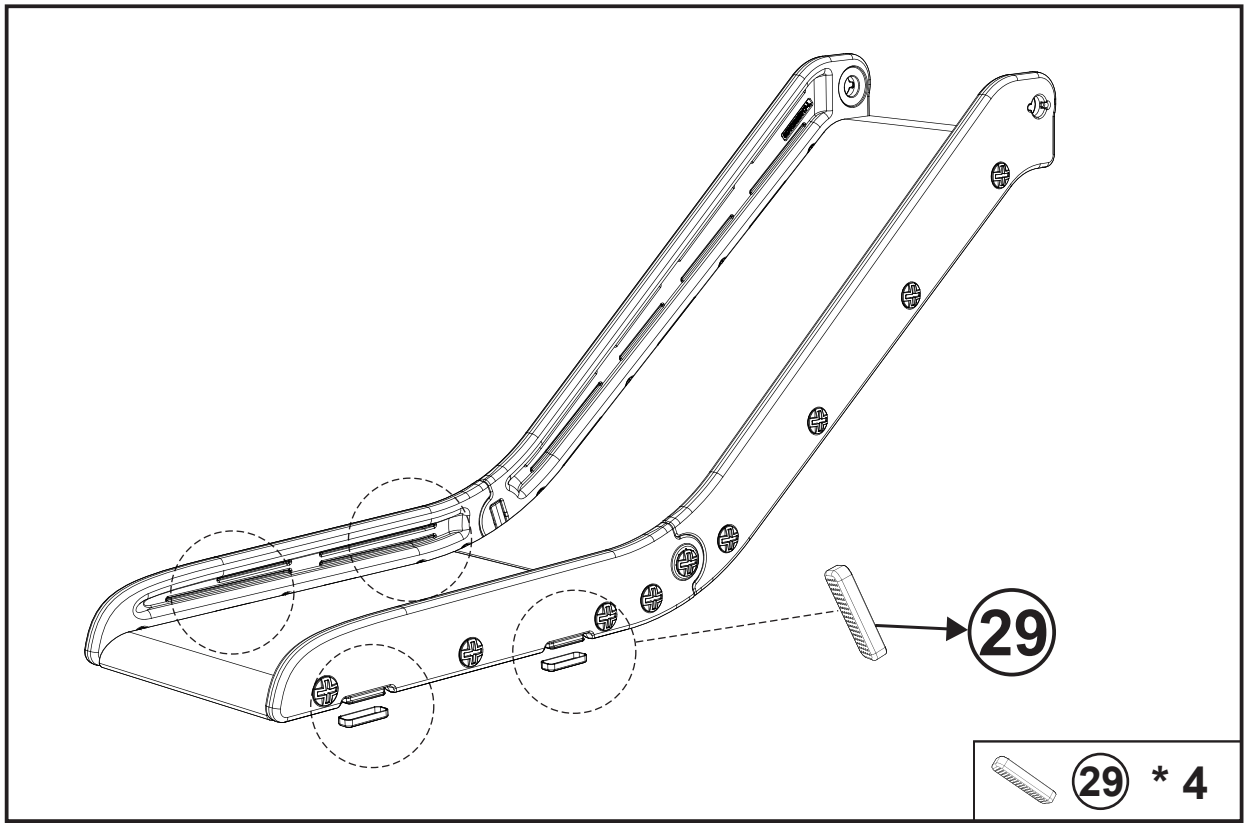

# ASSEMBLING

## STEP 5

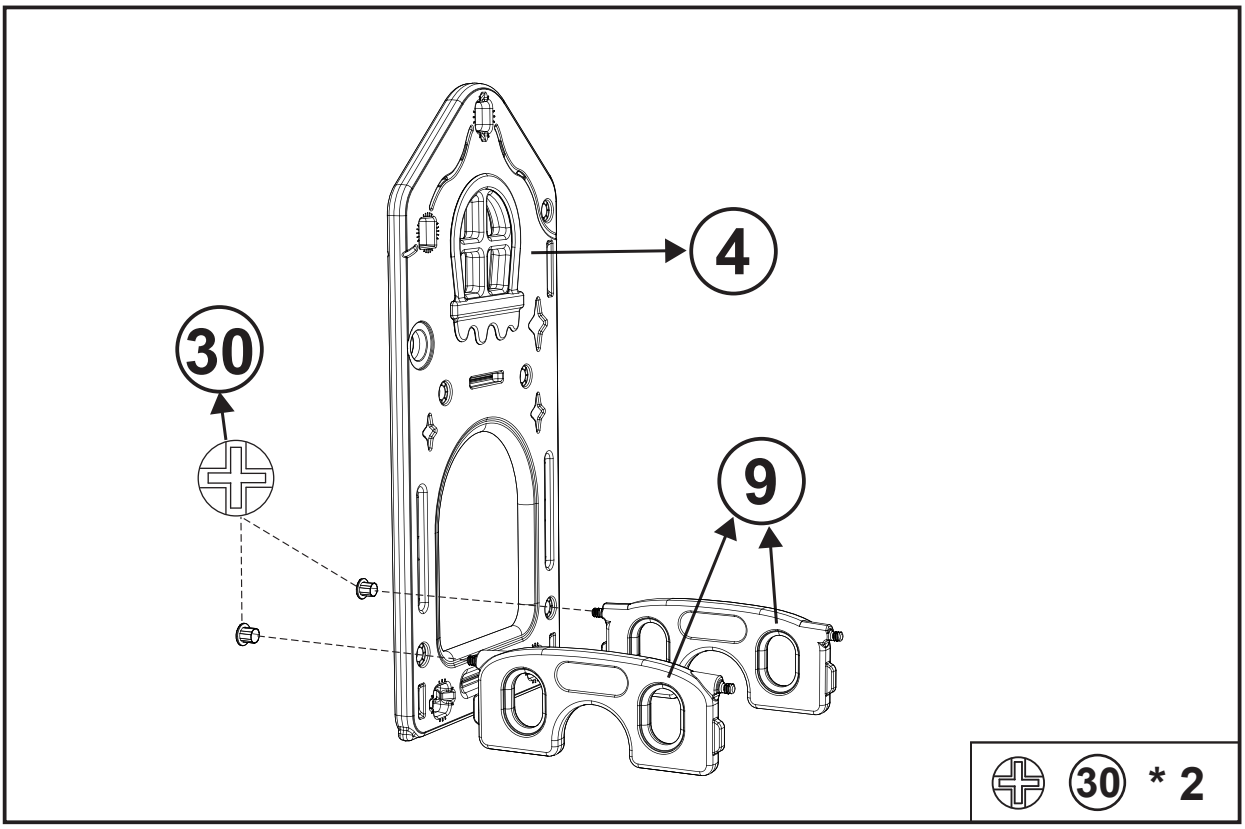


## STEP 6

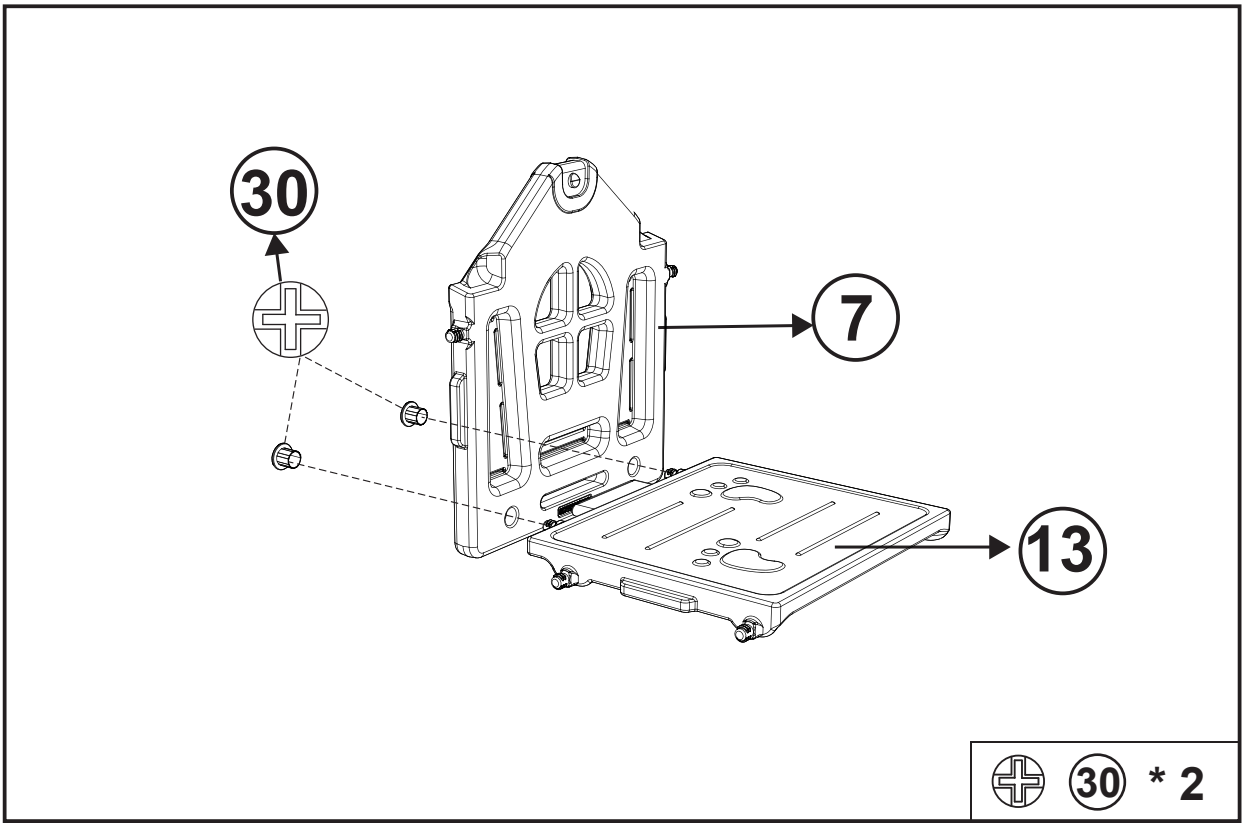

# ASSEMBLING

## STEP 7

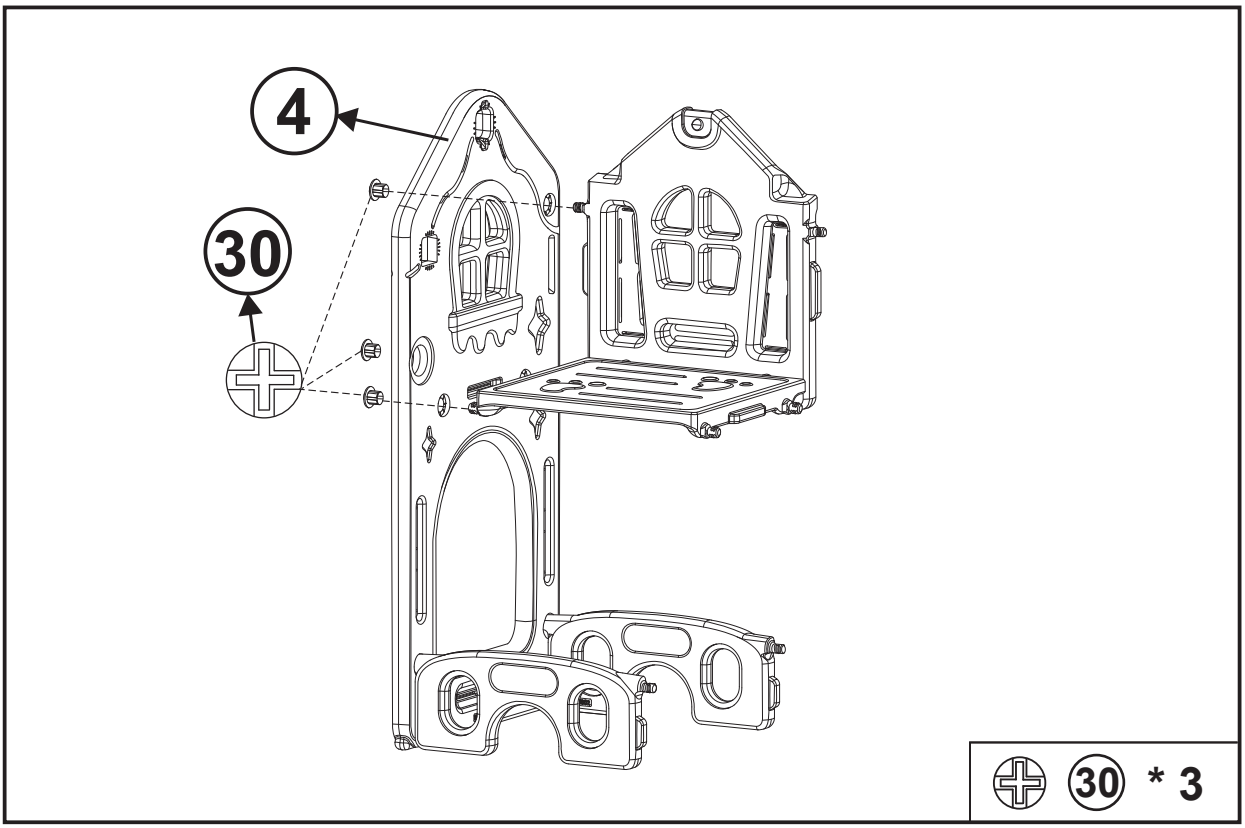


## STEP 8

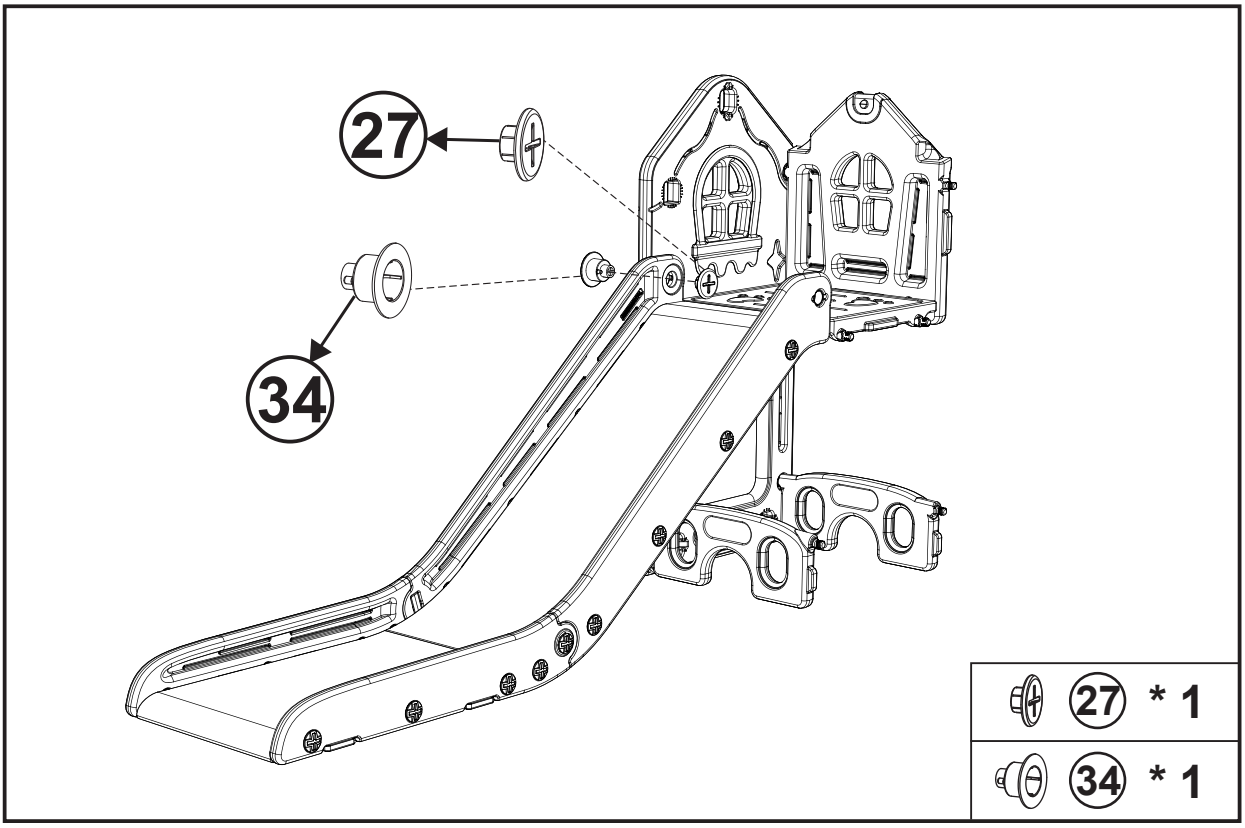

# ASSEMBLING

## STEP 9

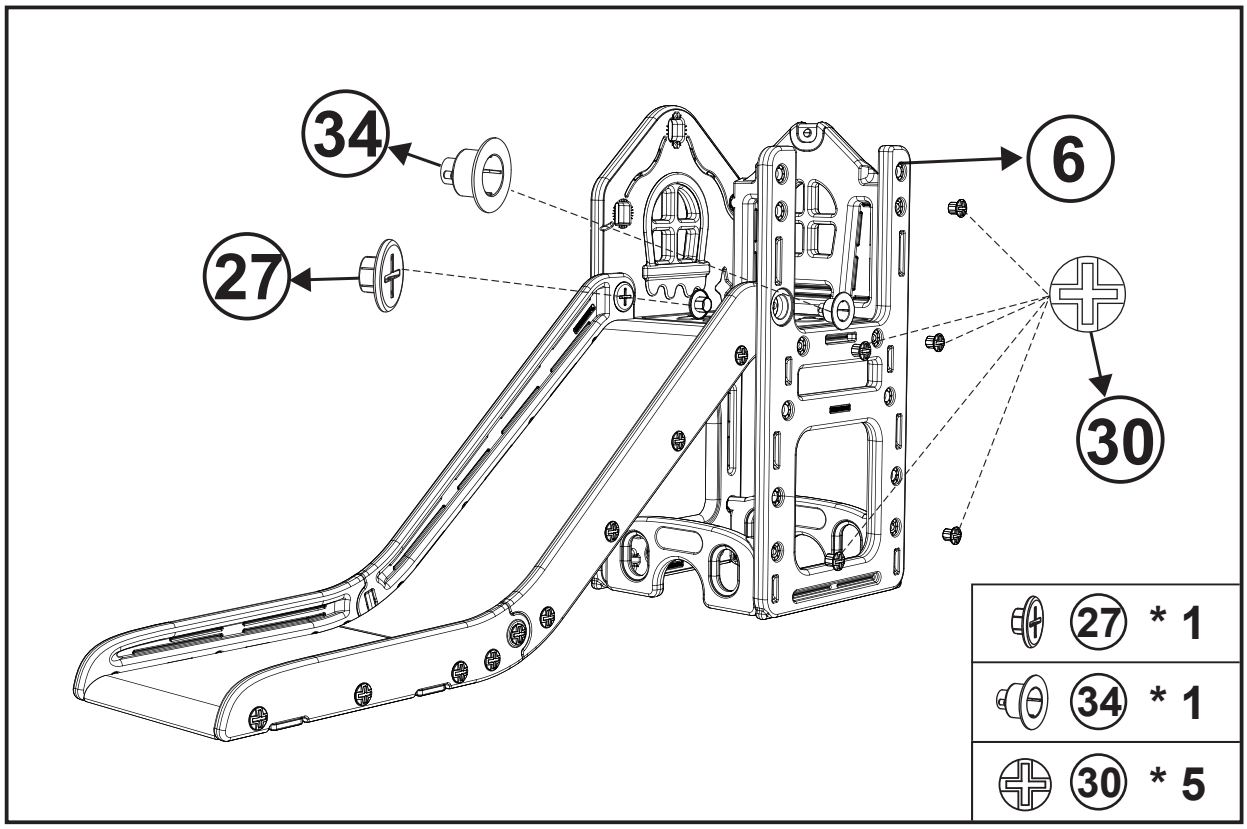


## STEP 10

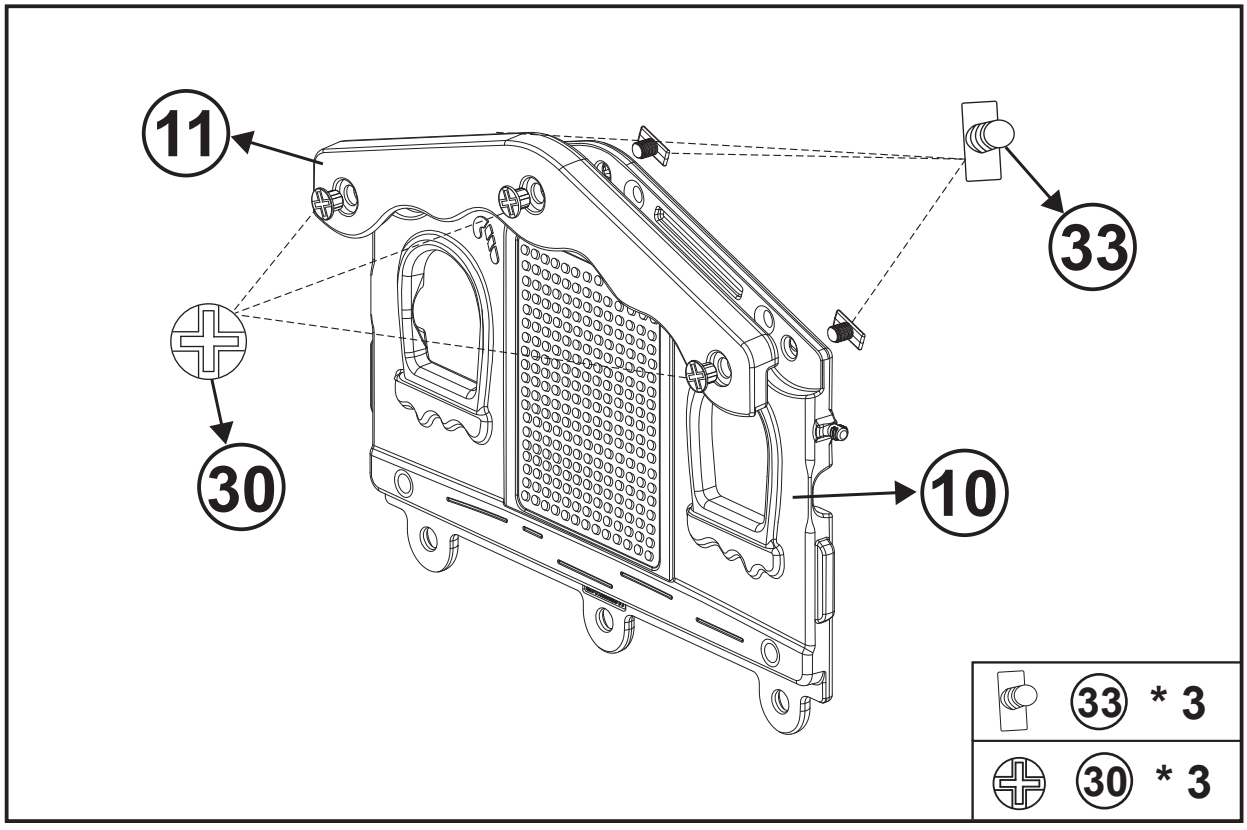

# ASSEMBLING

## STEP 11

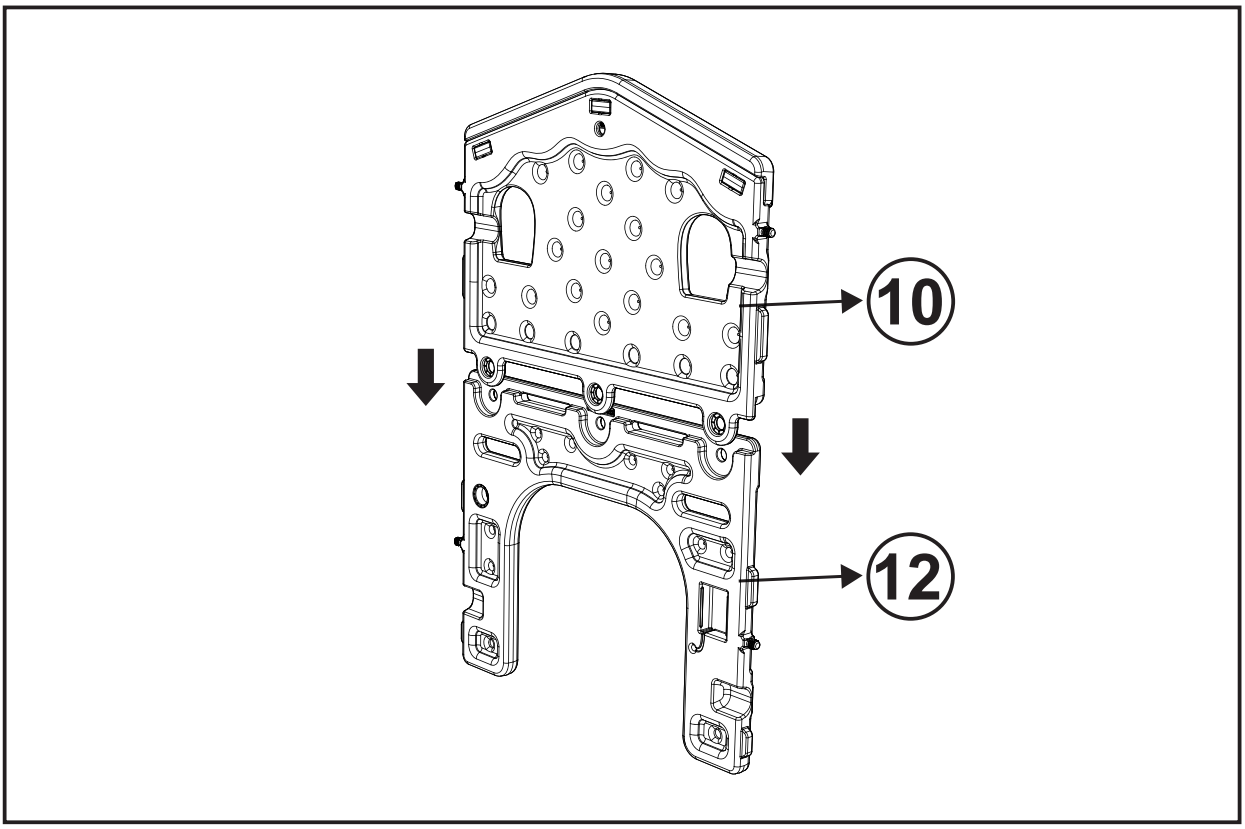


## STEP 12

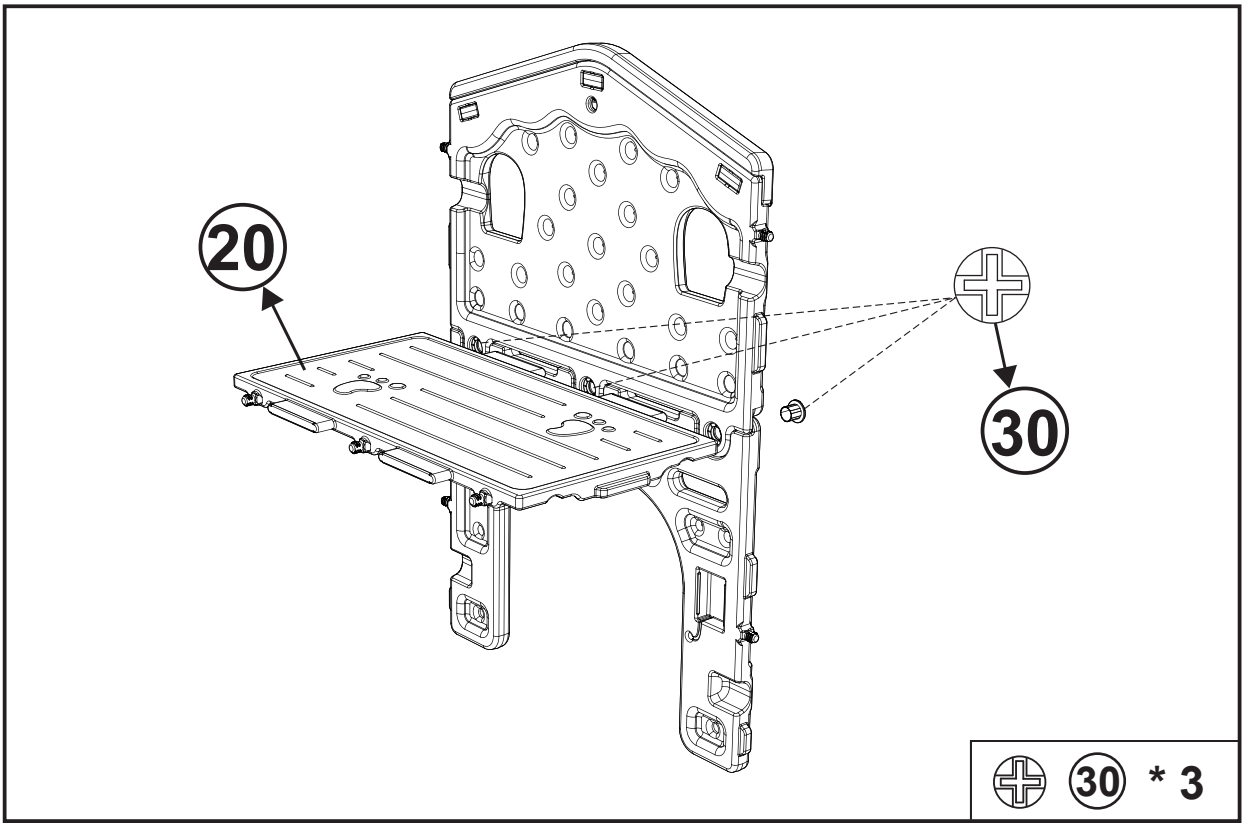

# ASSEMBLING

## STEP 13

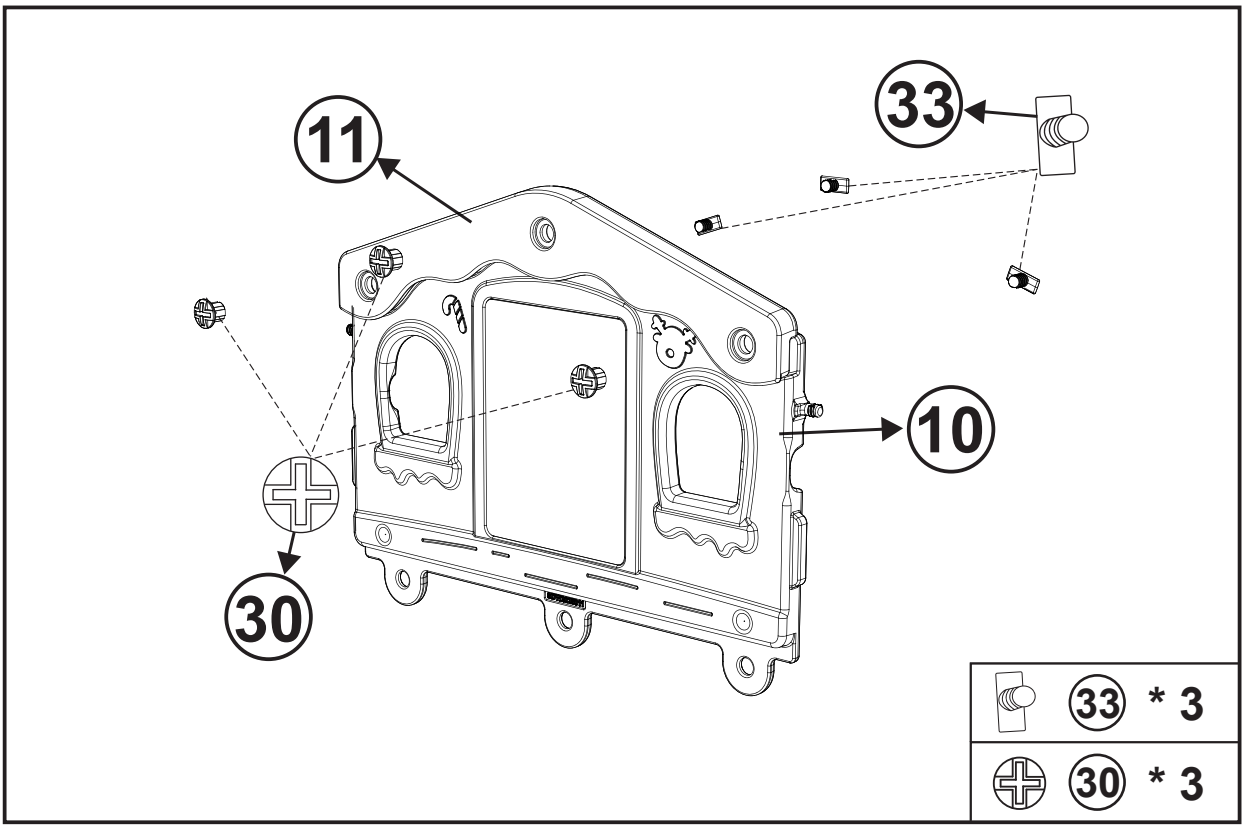


## STEP 14

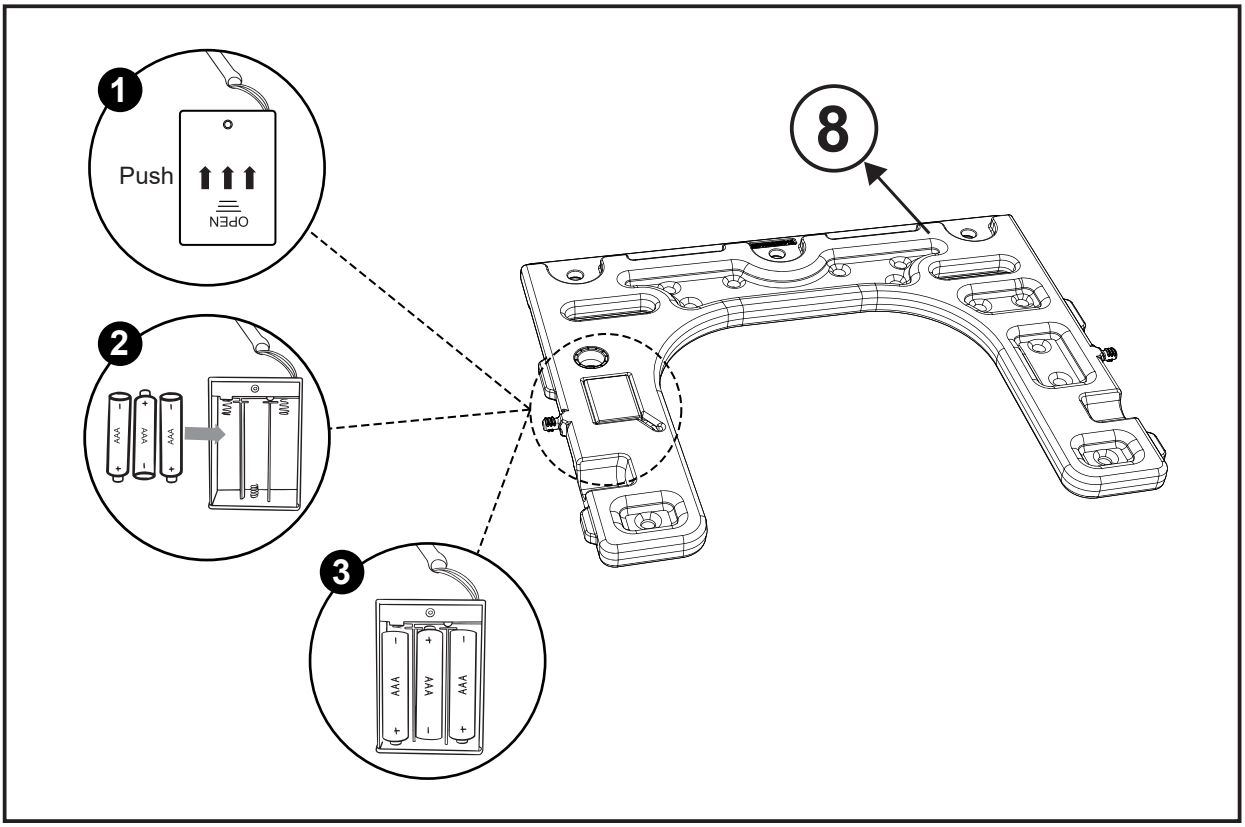

# ASSEMBLING

## STEP 15

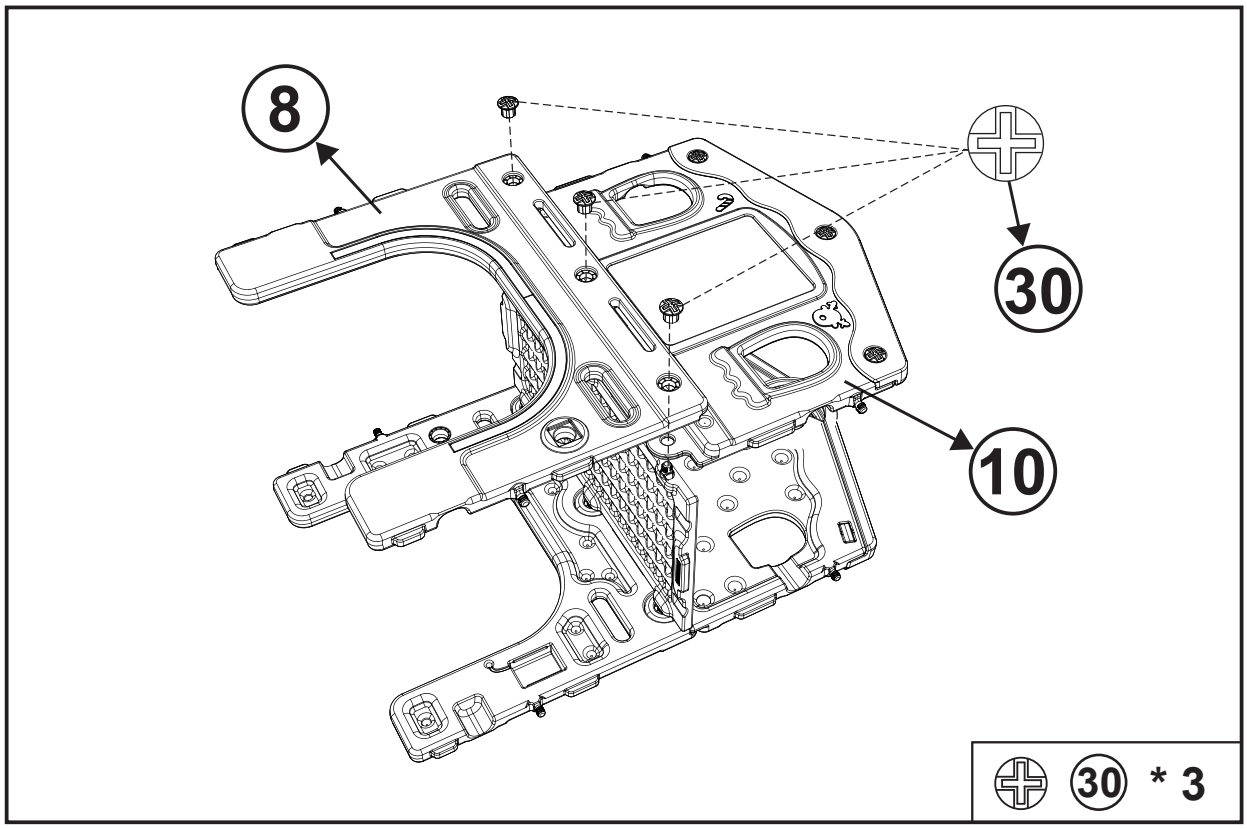


## STEP 16

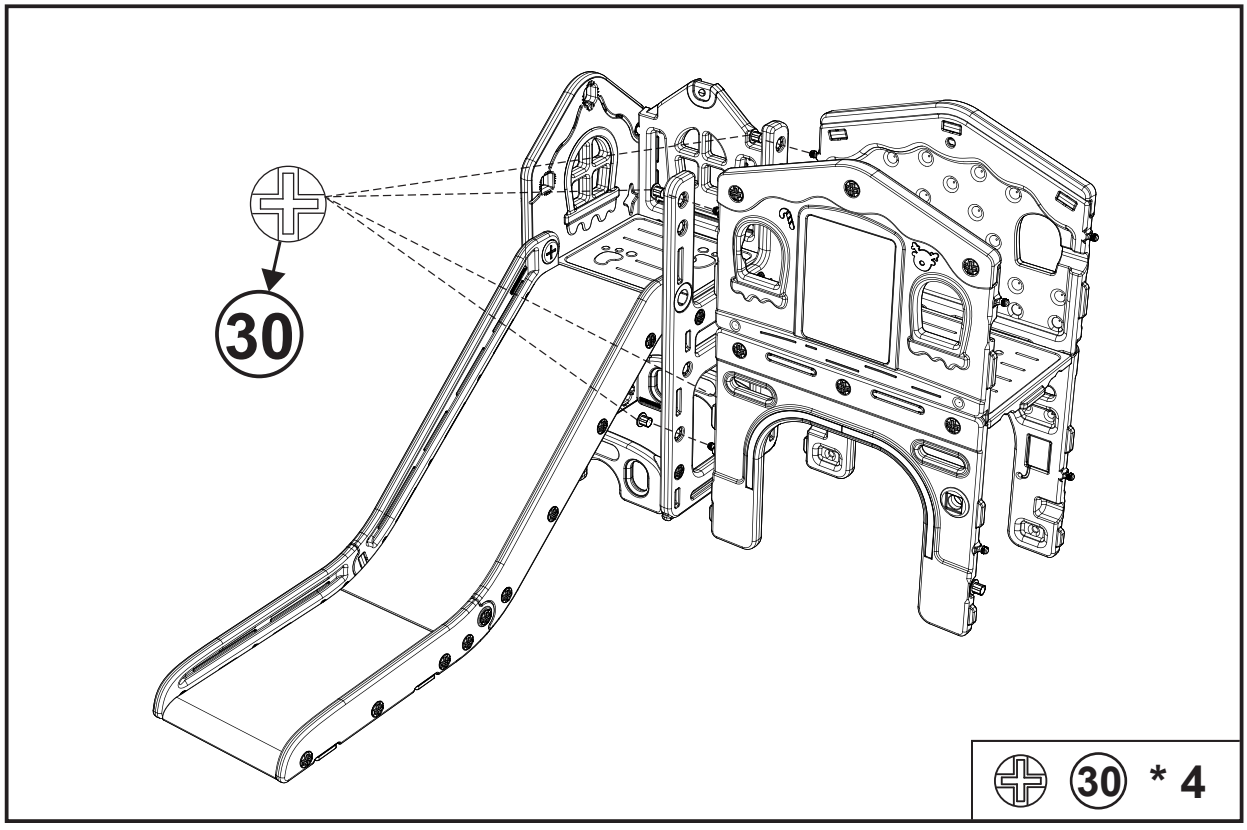

# ASSEMBLING

## STEP 17

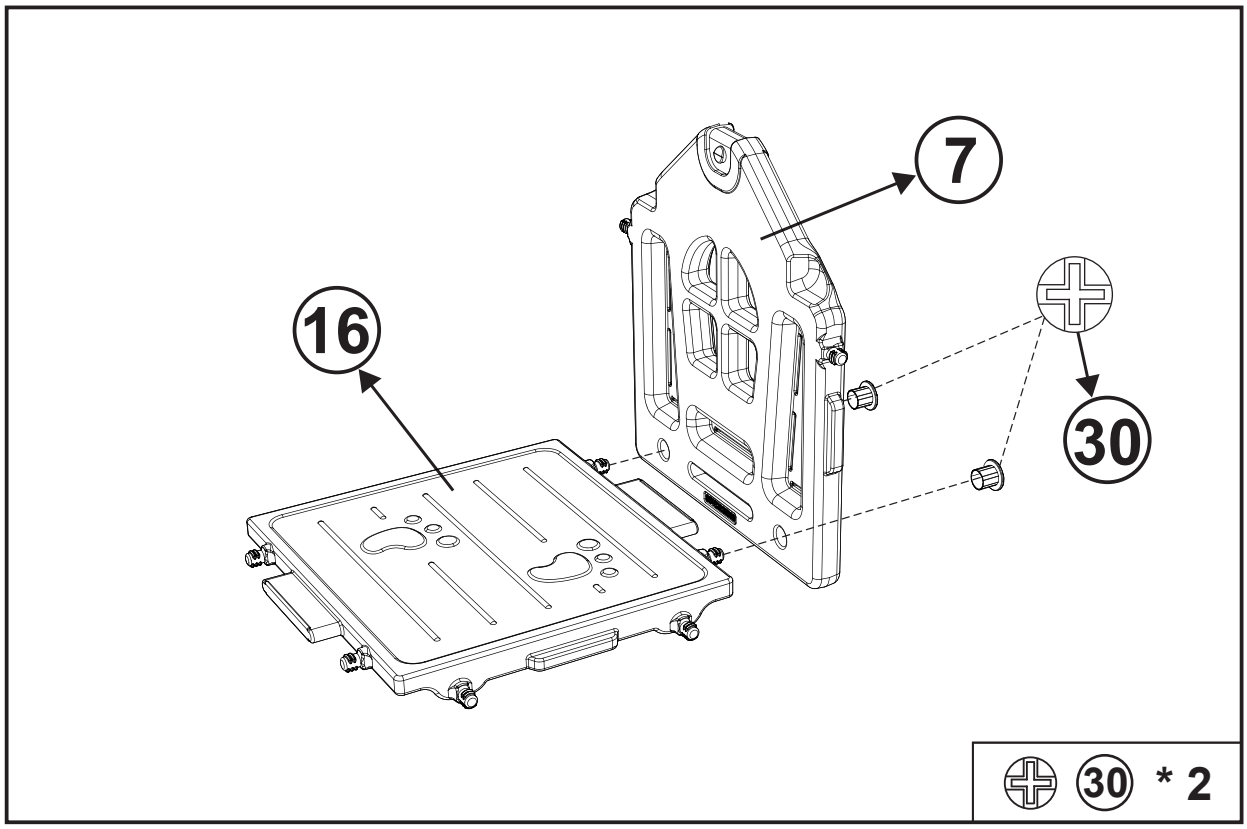


## STEP 18

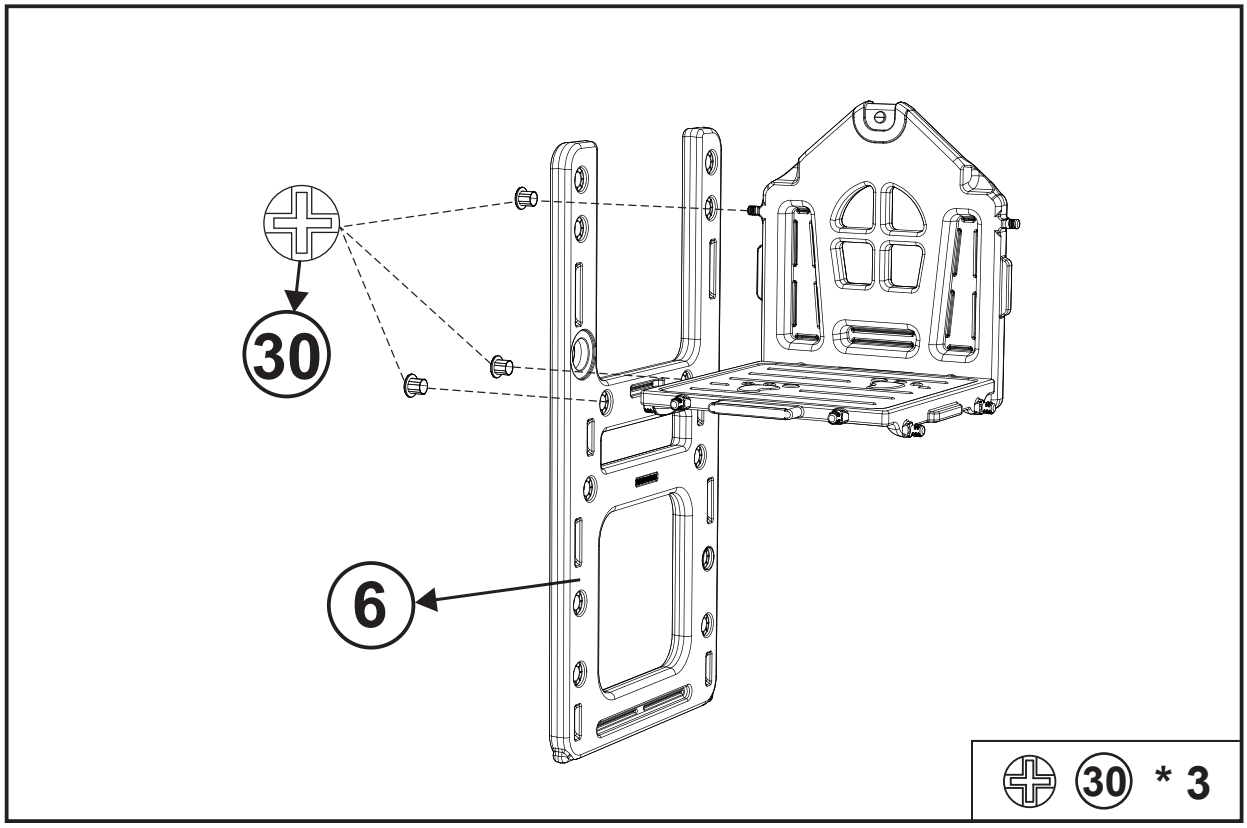

# ASSEMBLING

## STEP 19

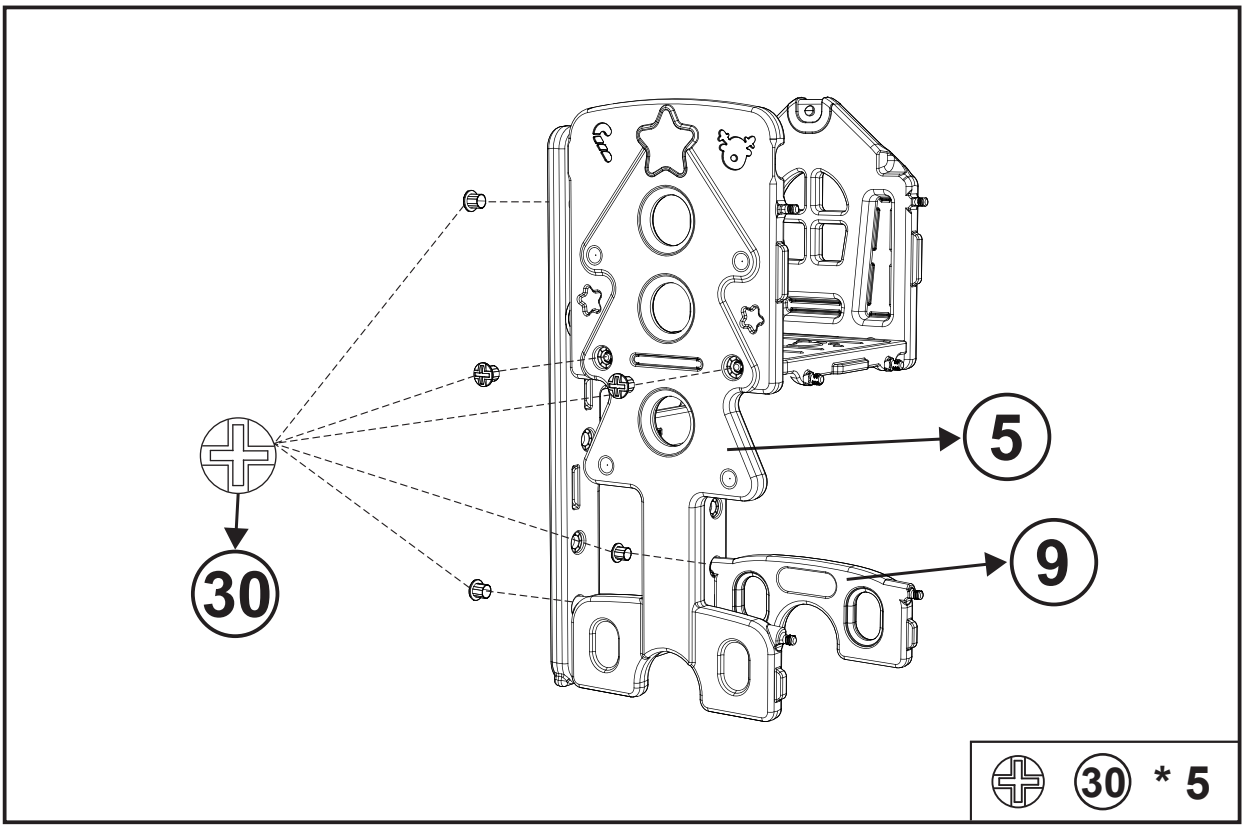


## STEP 20

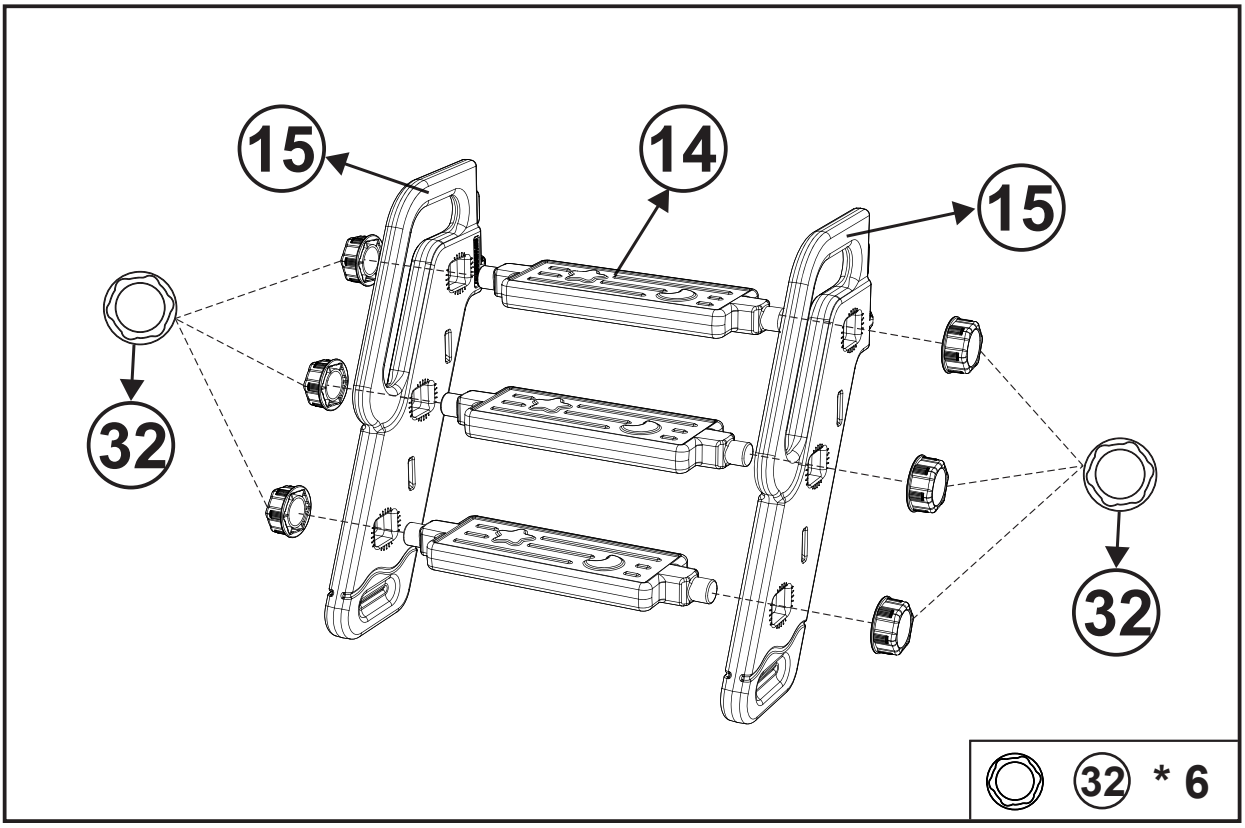

# ASSEMBLING

## STEP 21

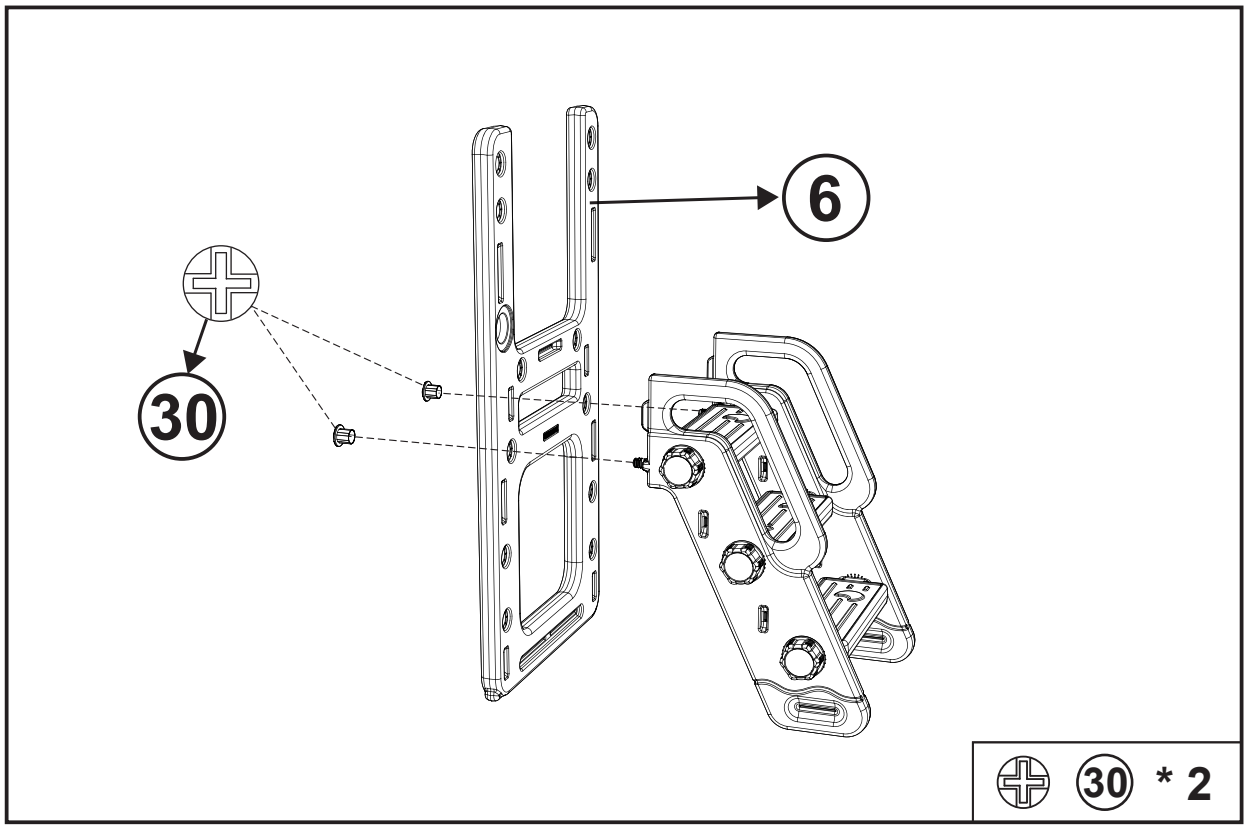


## STEP 22

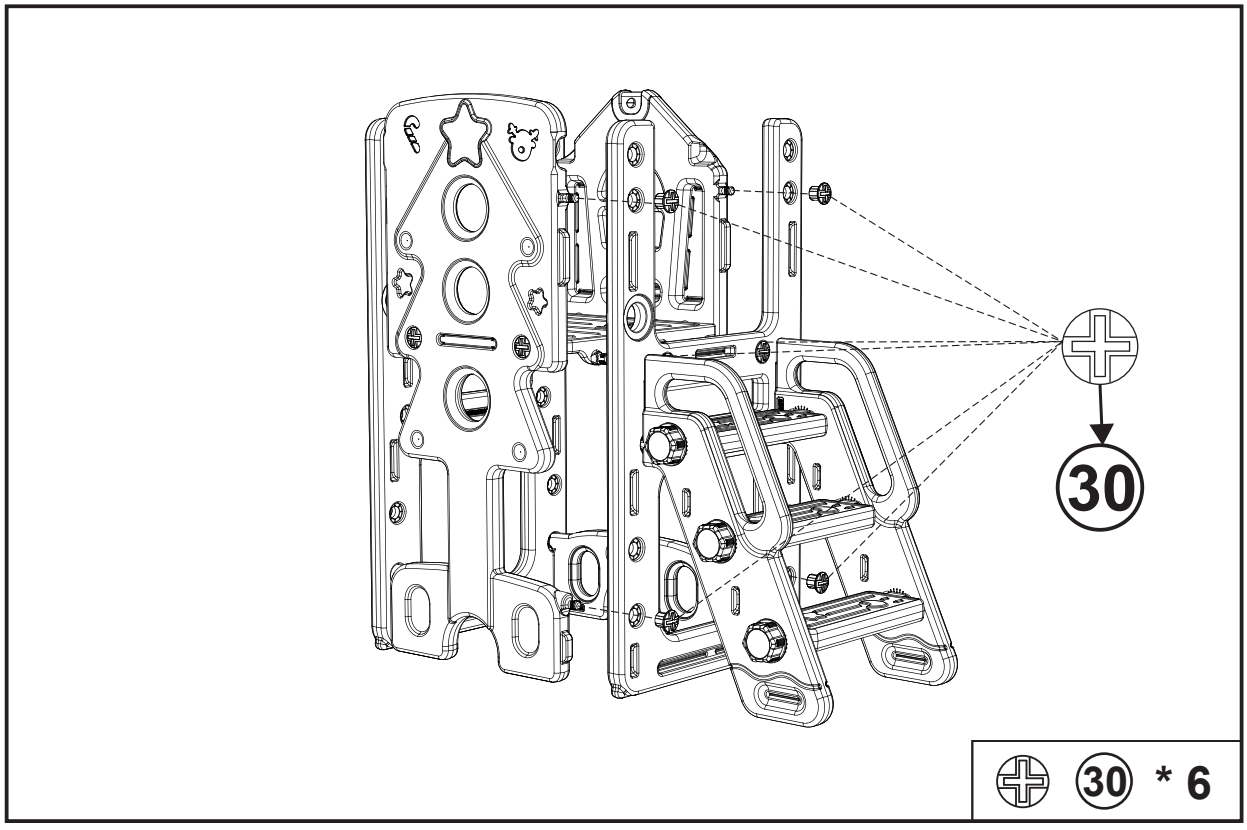

# ASSEMBLING

## STEP 23

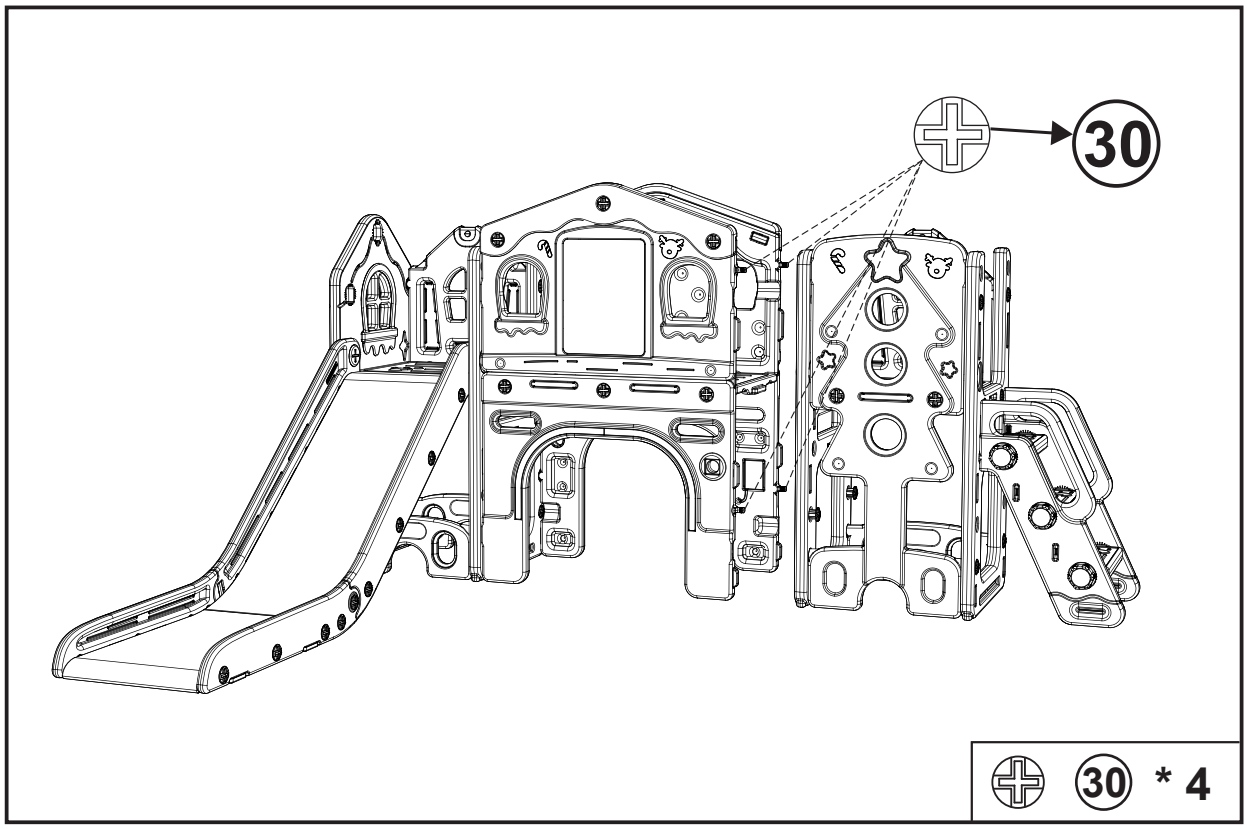


## STEP 24

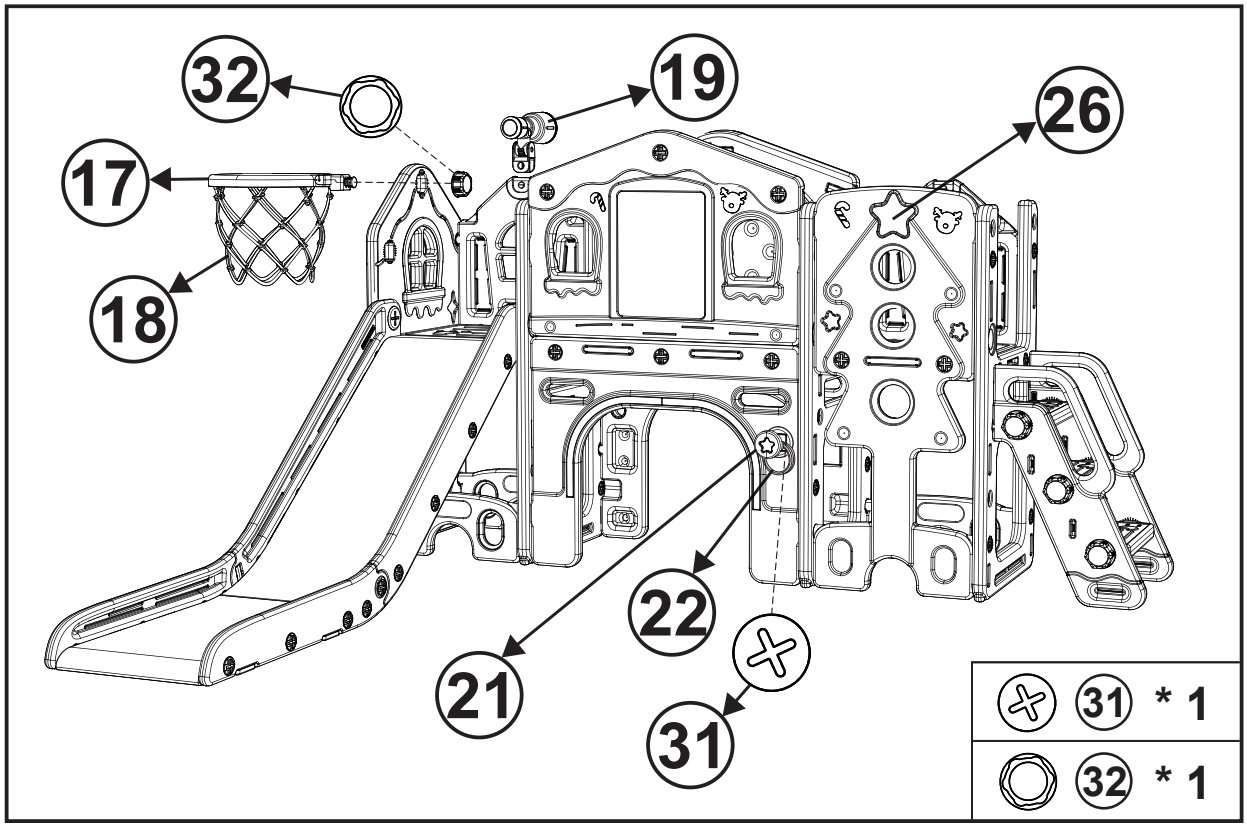

# BASKETBALL NET INSTALLATION STEPS

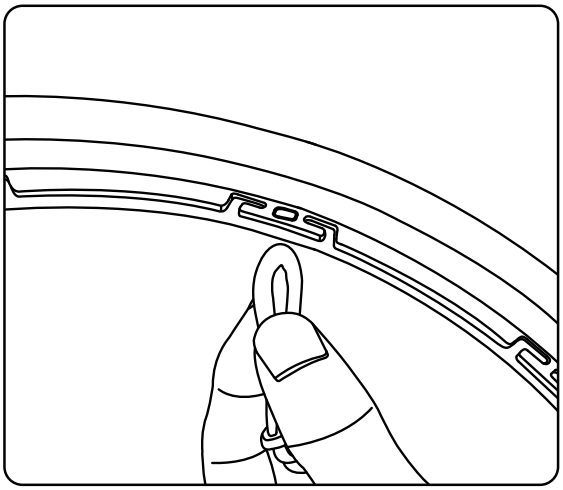

❶ Pick up one end of thebasketball net.

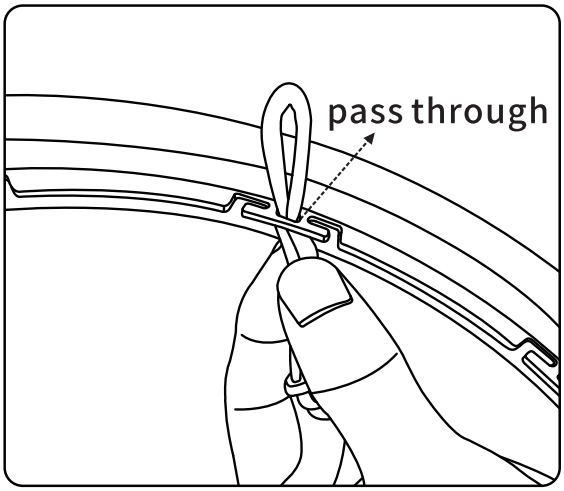


❷ Pass the basketball net through the middle of the basketball hoop hanging hole.

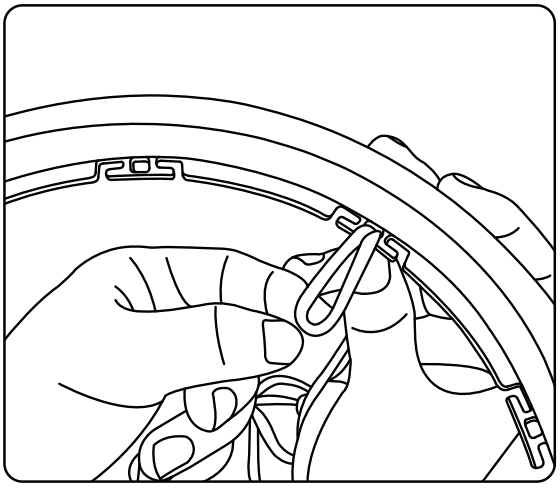

❸ Reserve enough passed parts to facilitate subsequent operations.

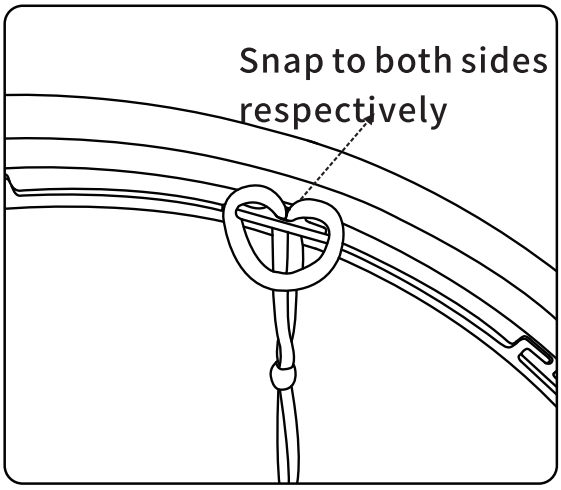


❹ Snap the basketball net into the grooves on both sides of the hanging hole.

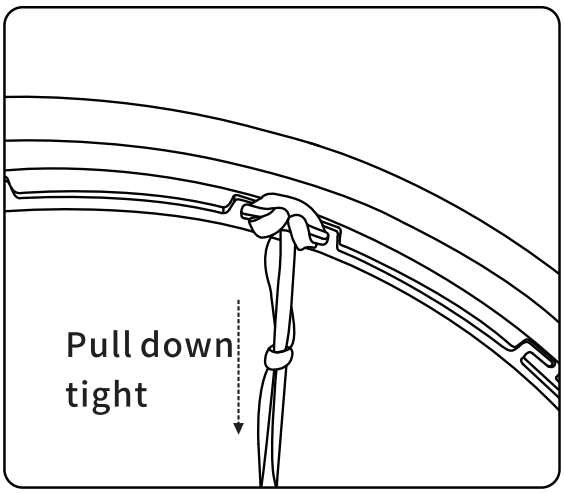


❺ Tighten the basketball net downwards so that the ropes passing through the hanging holes form a double knot.

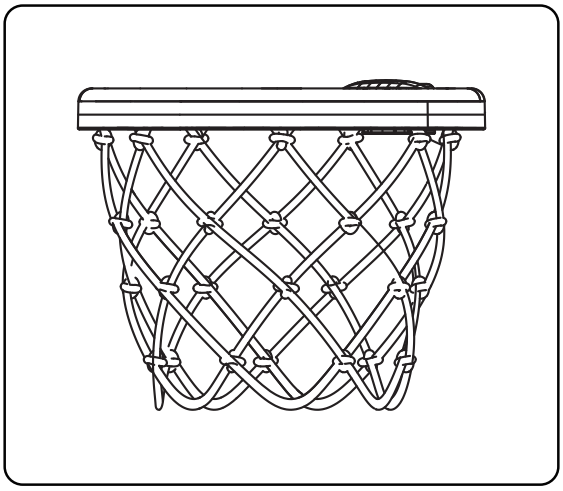

❻ Use the same method to hang basketball nets in other directions to the corresponding holes.

# Please scan the QR code above for installation video!

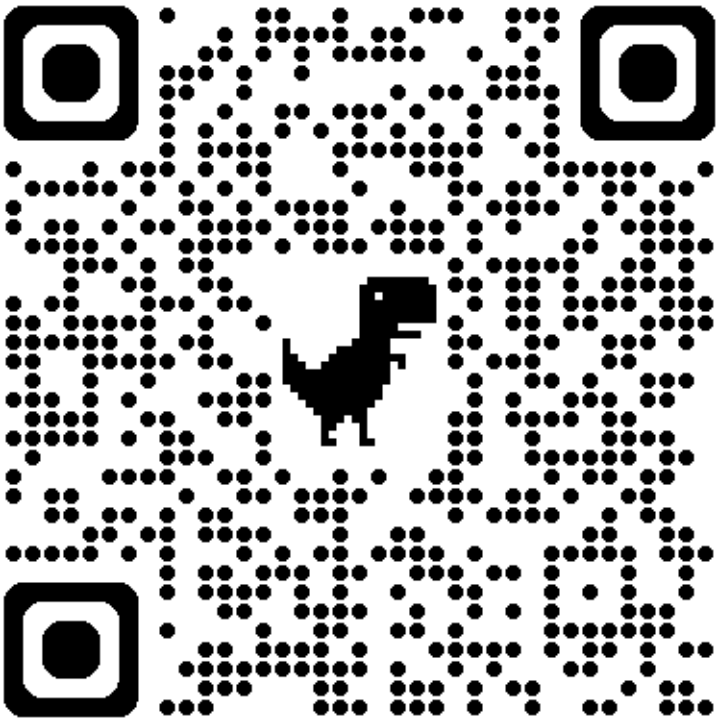

# E-mail Service : toddlerslide@gmail.com

***THANK YOU***

*Thank you for purchasing the kid slide from our store. If you experience any problem while using it, please feel free to contact us. We will solve the problem for you quickly and provide the best customer service!*