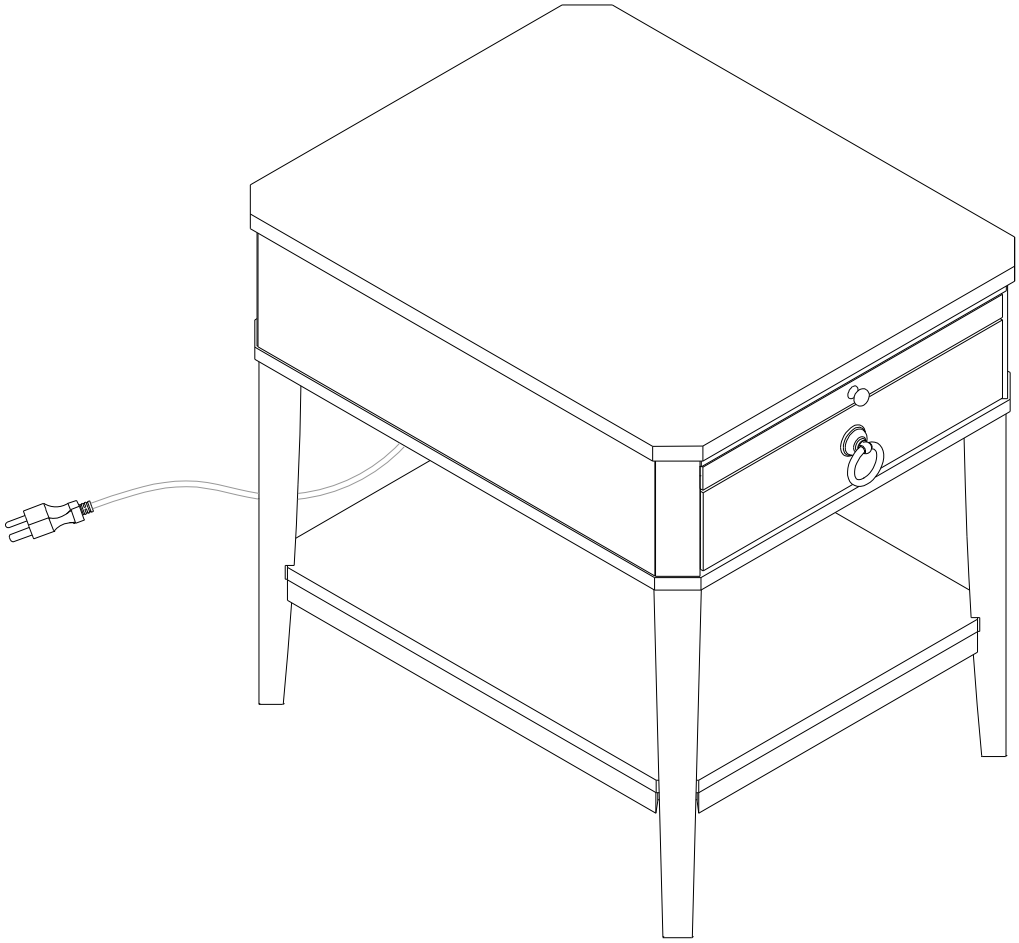

ITEM NO. ETHH1797

Scan for manual,
video & advice.

If you have any questions or concerns,
don't hesitate to reach out to us.

Call us: +1(833)324-2464 (8 AM to 5 PM PST Monday-Friday)
Email: customerservice@hulalahome.com

MAINTENANCE AND WARNINGS

Thank You For Choosing Our Furniture.
Please read the instructions and warnings carefully before use, to ensure safe and satisfactory operation of this product.

NOTE :
This brochure contains IMPORTANT safety info. Please read and keep it for future reference.

LB
Weight Limitation
40 LBS

Installation:
30 minutes.

Two Person

Before You Start

Please follow the steps below:

- Unbox the package and check if all parts and accessories are complete.
- If you find something missing, stop assembly and contact your supplier immediately.
- Please do not completely tighten all the hardware until the entire assembly is completed! Be sure to tighten all the hardware once the assembly completed.
- NOTE:Should be assembled on soft surface to keep balance.

After-Sales Service

- If you encounter any issues or need technical support during use, please contact our after-sales team. We offer long-term maintenance and warranty services.

Warranty

We strive to offer high , quality products, and we also try our best to satisfy each and every customer that orders from us with product or service as needed. Each customer must provide a record of their order such as the order number, or item receipt for any items that are out of the warranty period you may also still receive replacement parts by purchasing them with our company if they are available.

Are you having dificulty with assembly? Missing parts? Please send email with your order number to **customerservice@hulalahome.com**

For return, please check the return policy with the retailer or market place you bought from. Appreciate your purchasing from us. Pop up your life by our furniture piece!

Daily Maintenance

- Keep furniture away from heat.
- Do not use cleaning agents containing acids, alkalis,or corrosive substances, as they may damage the surface. It is recommended to use neutral cleaning agents or specialized furniture cleaners.
- Do not place furniture under direct sunlight, material will possibly fade over time.
- Do not use on site dry cleaning machine.
- Children should not climb or jump on the furniture.
- Do not write on furniture without a padded barrier to protect the surface.
- Not for commercial use, for residential use only.

Exploded Diagram

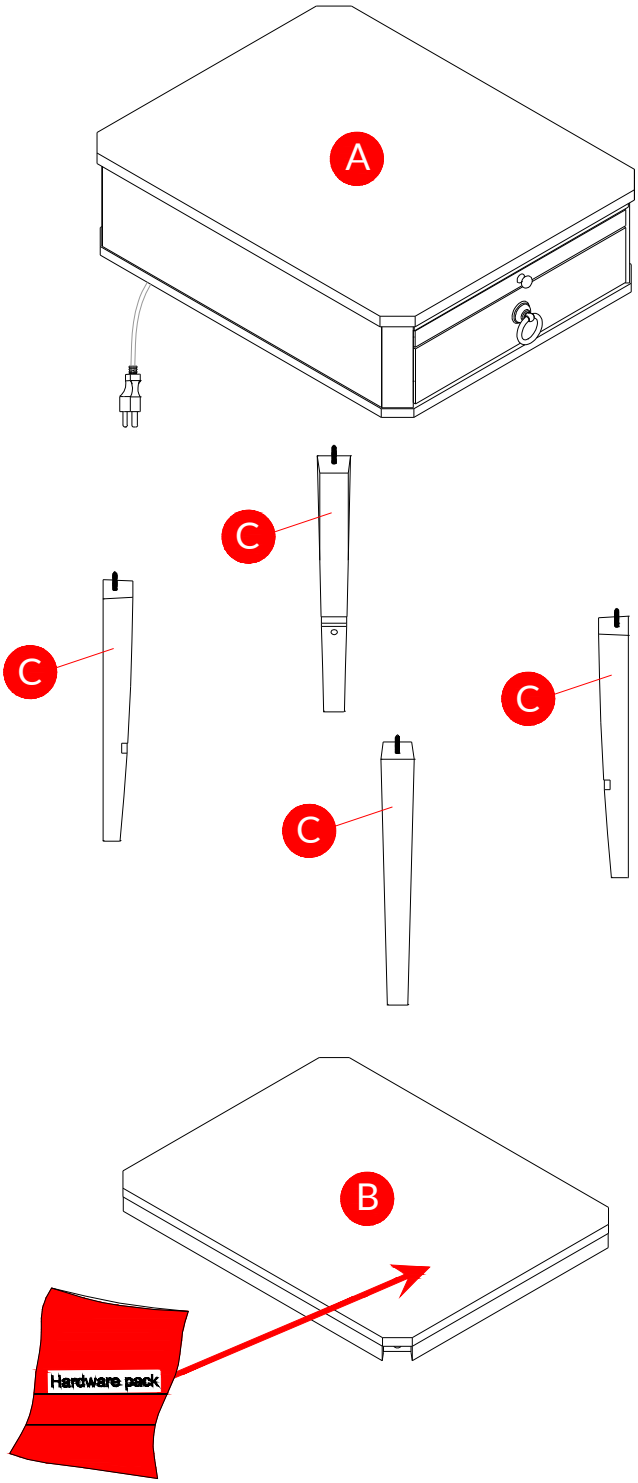

Note:
The hardware kit is located
on the back of the base plate.

Parts List

A ×1

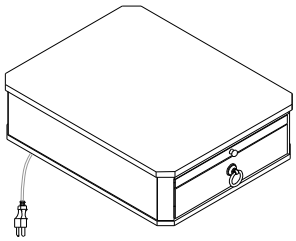

Table top

B ×1

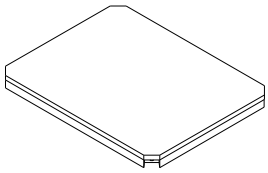

Bottom panel

C ×4

Legs

Hardware List

1 ×4

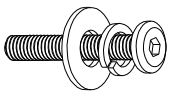

Bolts-Ø1/4"x57mm

2 x1

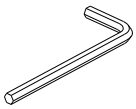

Allen key - 68*25*4mm

Assembly Instructions

Step 1

Insert Part (C) Table Legs into Part (A) Tabletop.

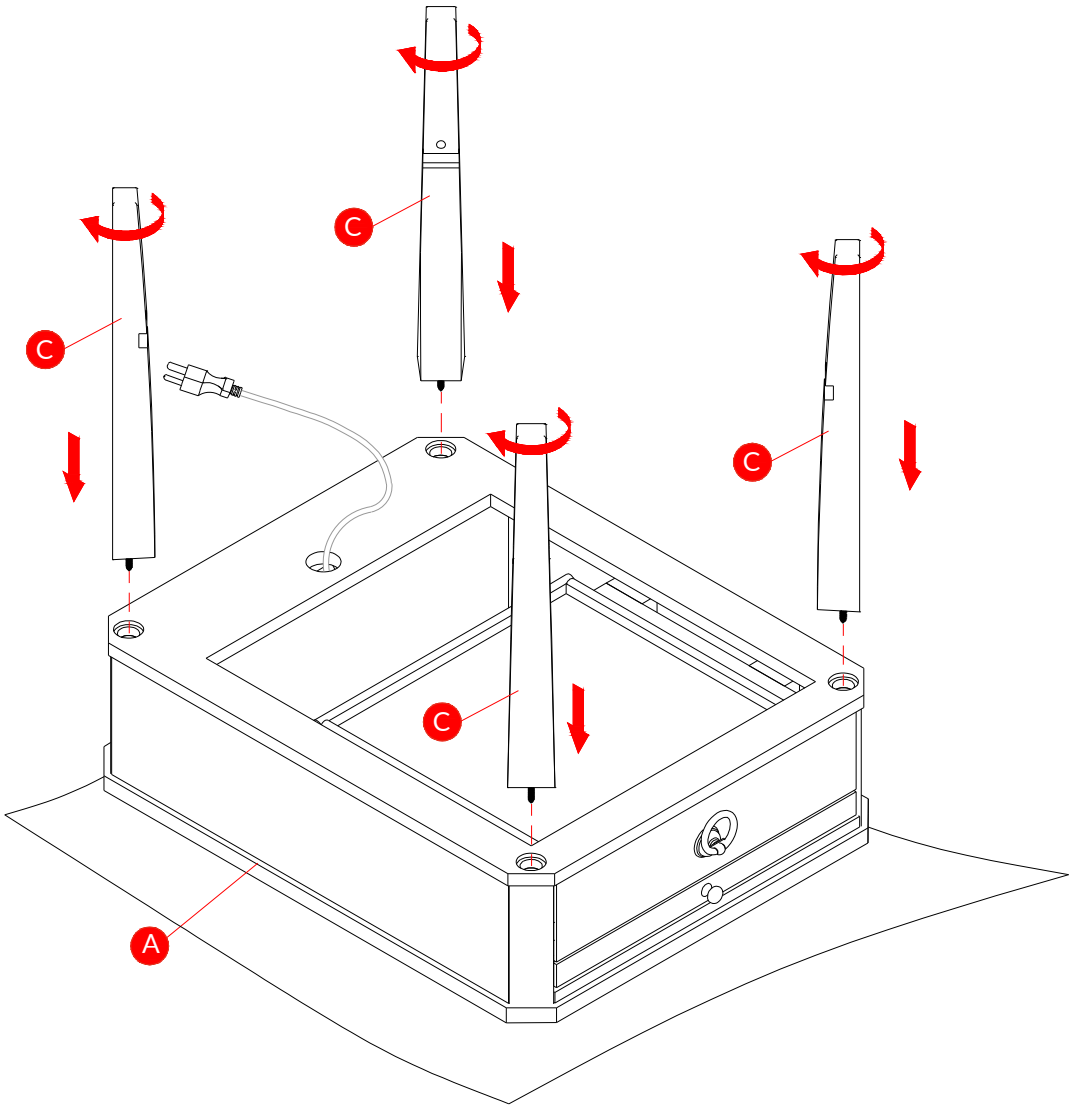

Step 2

Insert bottom panel (B) into legs (C), make sure all holes align aligned and using bolts (1) then tighten the screw with an Allen key (2).

1	×4	Ø1/4"x57mm
2	×1	68*25*4mm

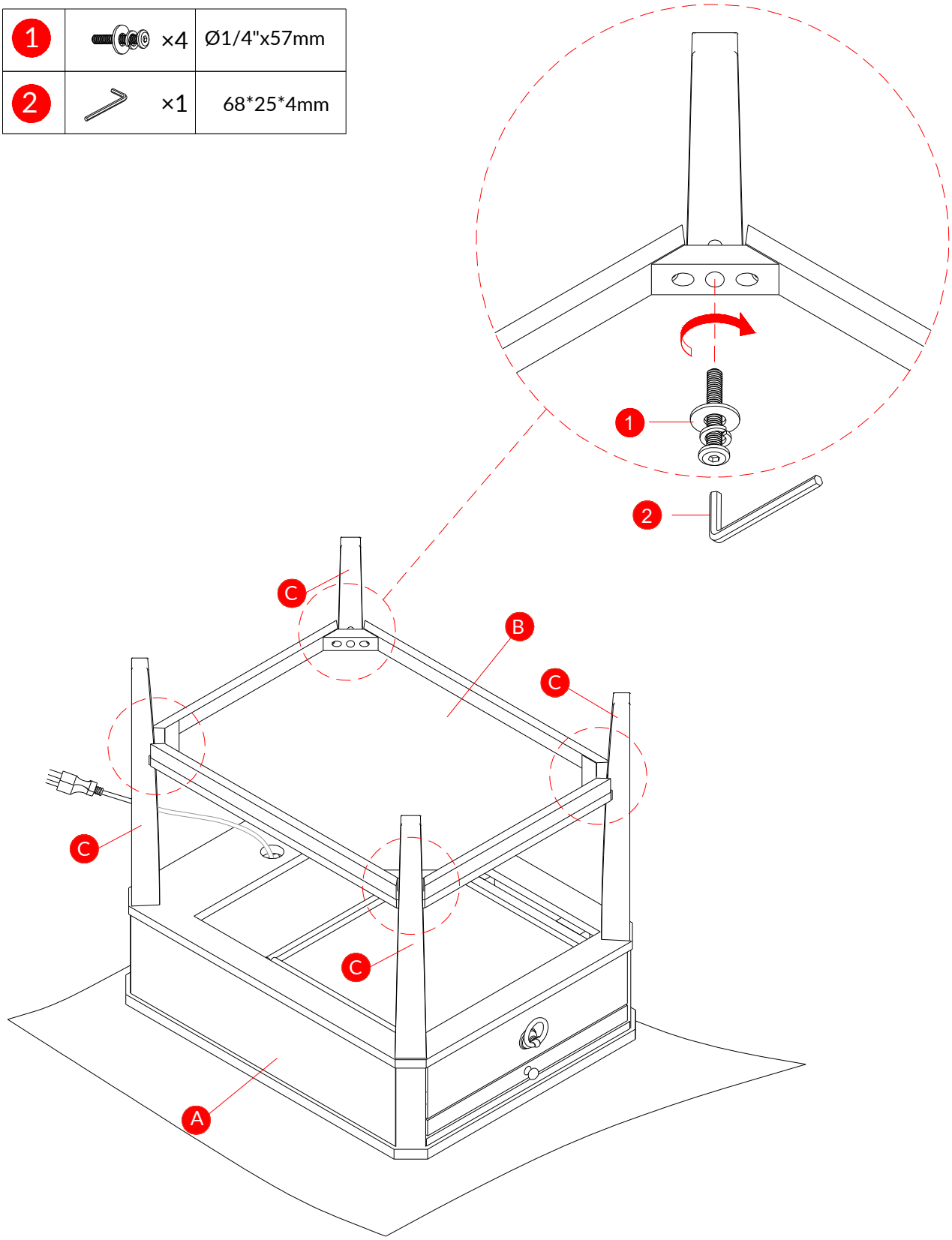

Step 3

Complete.

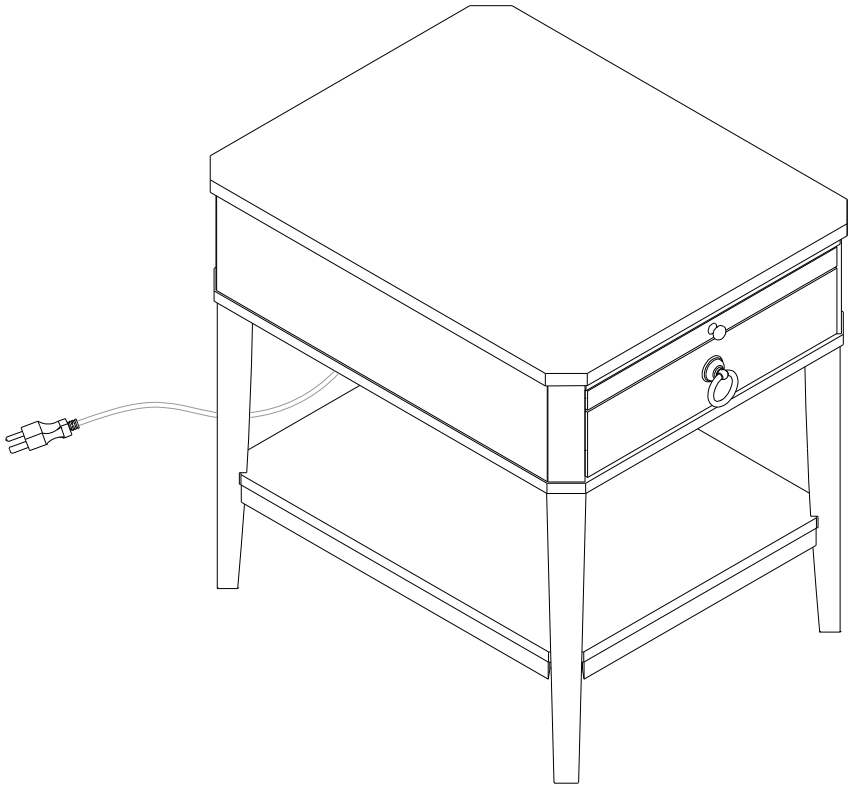

WWW.HULALAHOME.COM
Email: customerservice@hulalahome.com
Call us: +1(833)324-2464 (8 AM to 5 PM PST Monday-Friday)