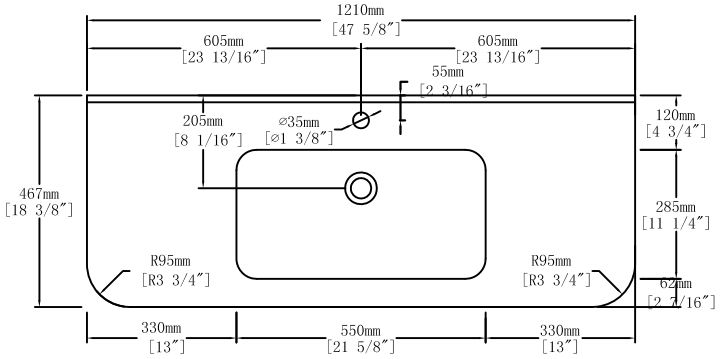

Top View

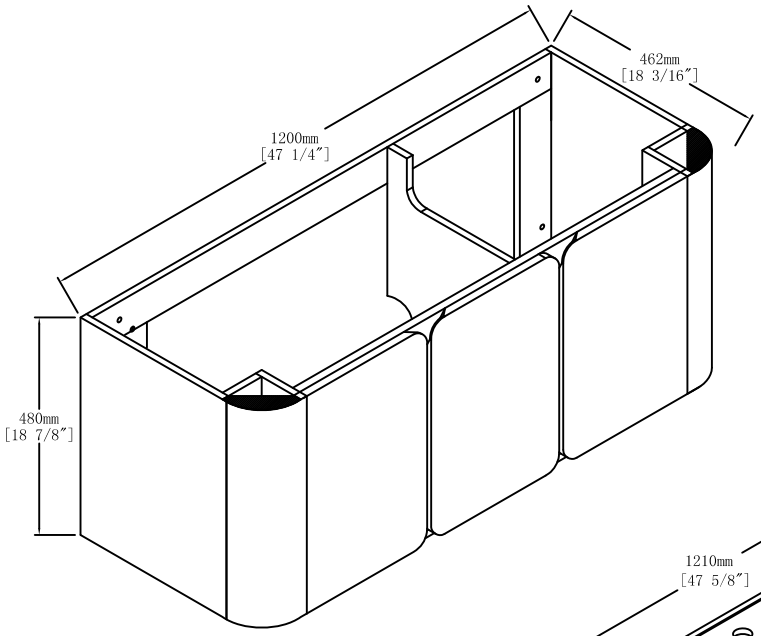

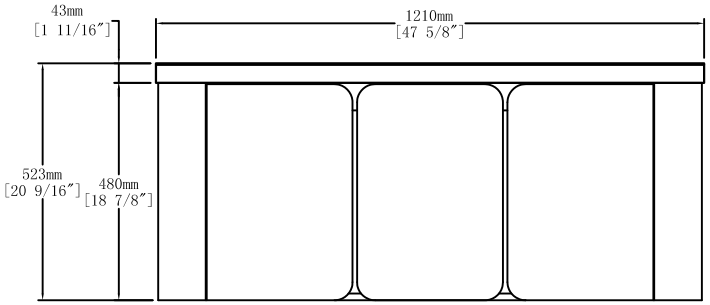

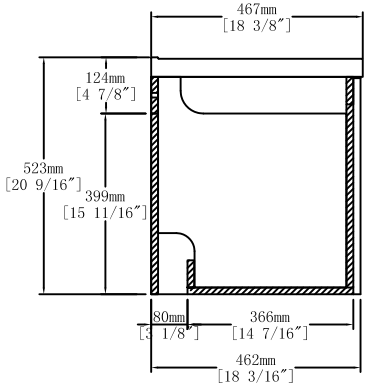

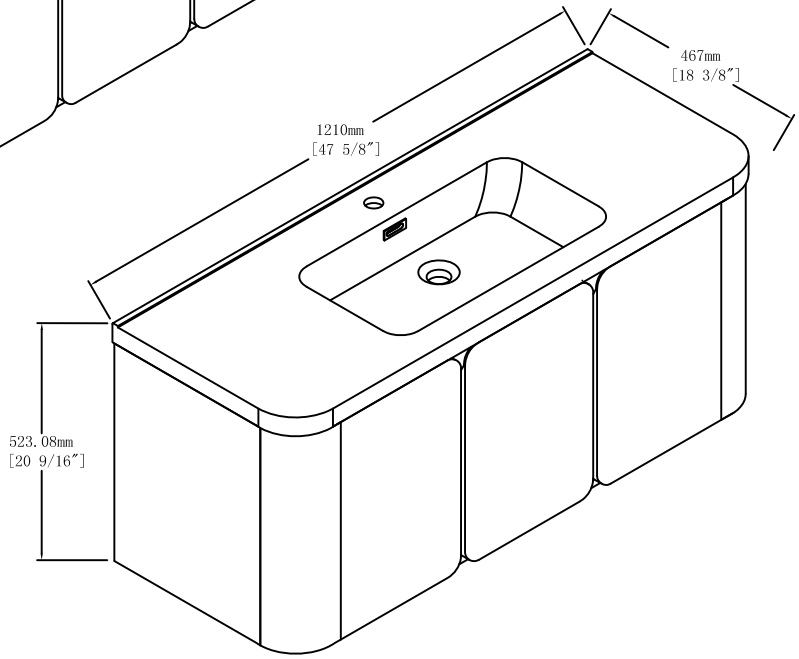

Version	V1
Date	2025-10-28