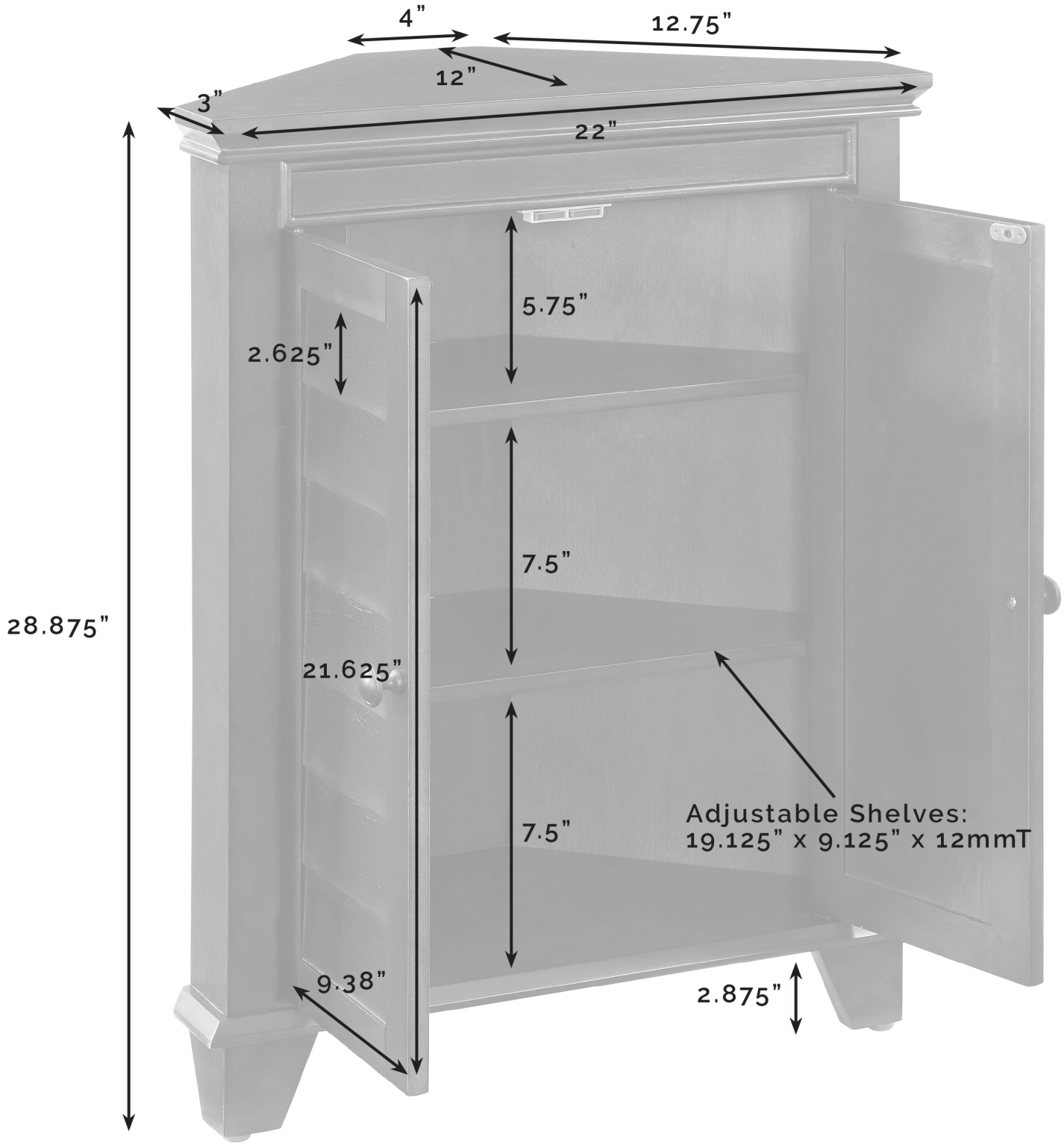Overall Dimensions: 22" W x 12" D x 28.875" H