tool cabinet

Product ID. QIY72

Scan for Support
support@garvee.com

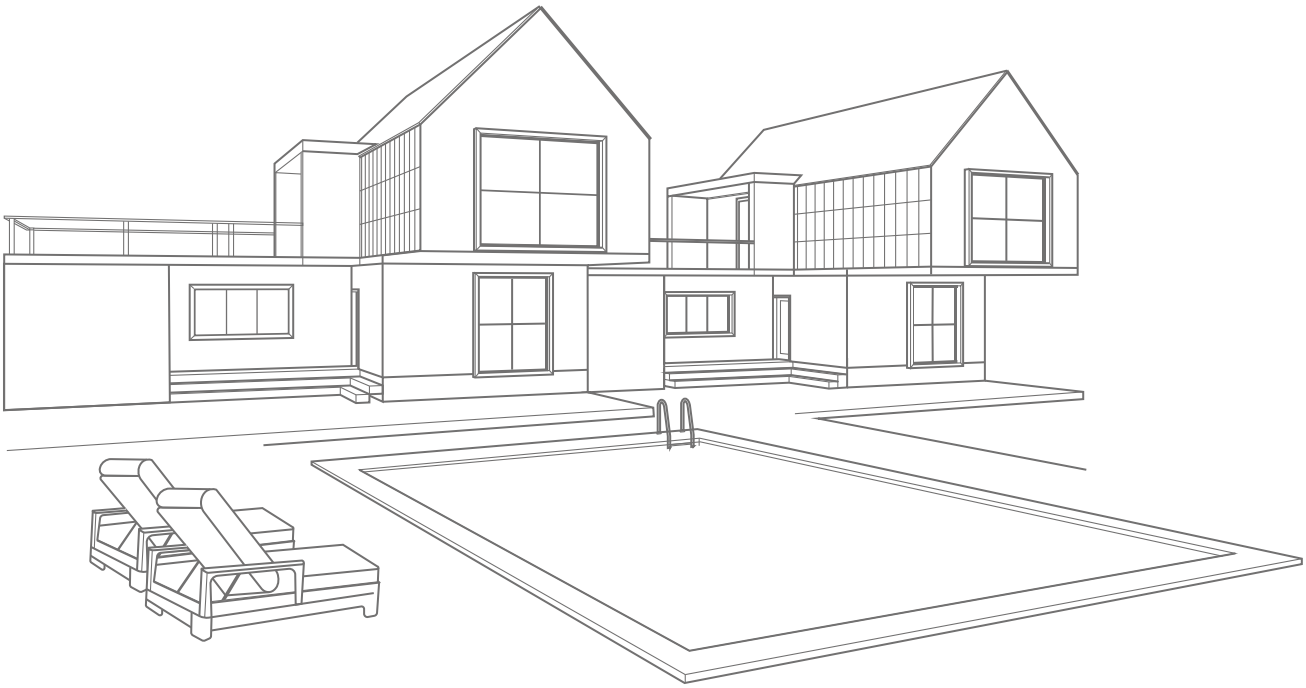

GARVEE.com

V260409XILA

72’’ Tool Cabinet with upper cabinet

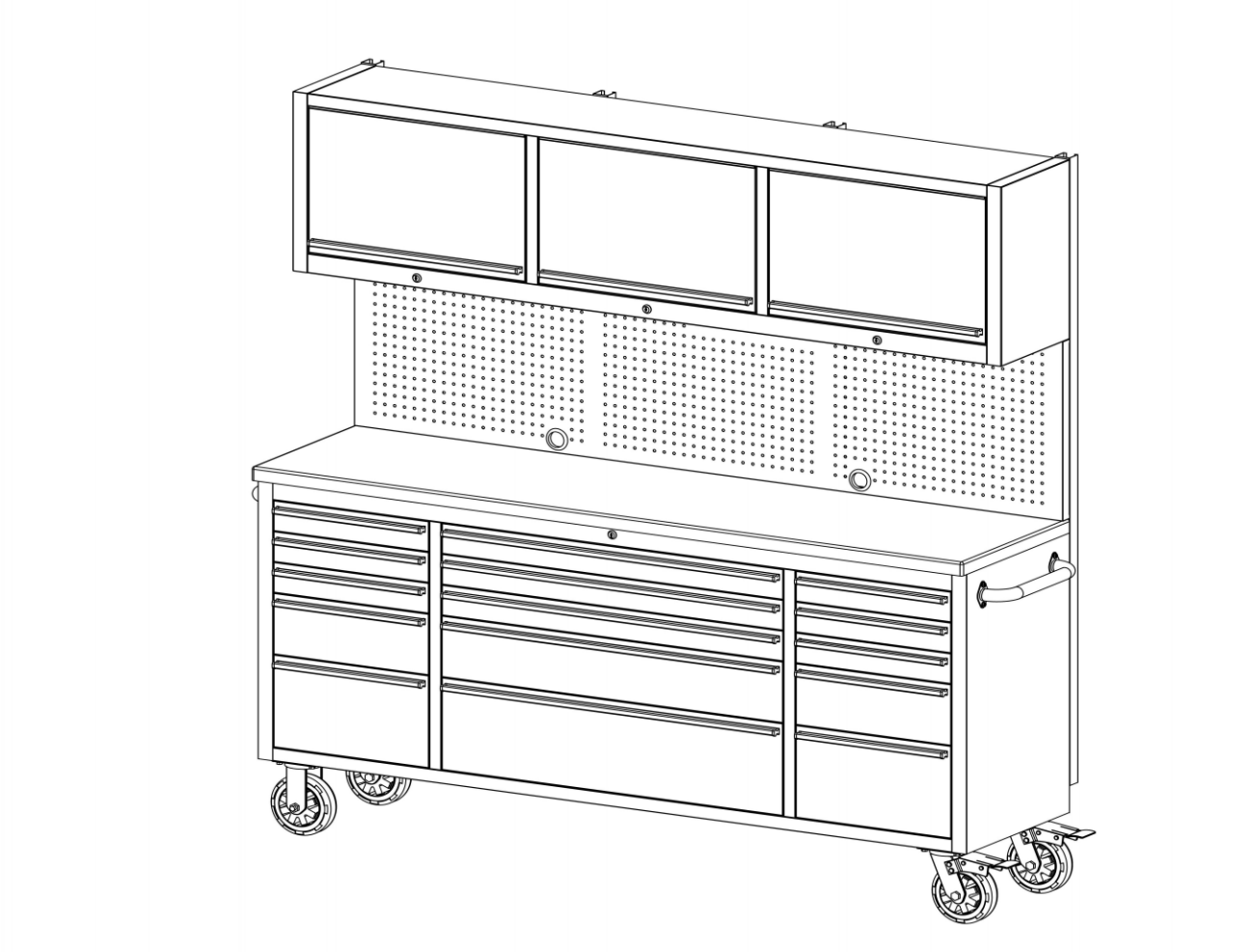

Actual product may differ
slightly from image shown.

OPERATION MANUAL

CAUTION: To reduce the risk of injury, user must read and understand operation manual. Save these instructions for future reference.

TABLE OF CONTENT

Safety Symbols.....2
Safety Instructions.....3
Parts List.....4
Assembly and Operation.....6
Maintenance and Safety.....9

SAFETY SYMBOLS

CAUTION:

1. Read and follow all safety and assembly instructions before using this product for the first time.
2. Fill in the following information and retain the manual for future reference:

	Do not open more than one drawer at a time.
	Do not step on drawers.
	Do not allow children near the unit.
	Set the brake on the locking casters unless you are moving the unit.
	Lock drawers and lid before moving the unit.
	Do not lift unit by yourself.

SAFETY INSTRUCTION

The purpose of safety symbols is to attract our attention to possible dangers. The safety symbols, and the explanations with them, deserve your careful attention and understanding. The symbol warnings do not by themselves eliminate any danger. The instructions and warnings they give are no substitute for proper accident prevention measures.

WARNING: Be sure to read and understand all safety instructions in this manual, including all safety alert symbols such as "DANGER," "WARNING," and "CAUTION," before using this product. Failure to follow all instructions listed below may result in electric shock, fire and/or serious personal injury.

SYMBOL MEANING

SAFETY ALERT SYMBOL: Indicates DANGER, WARNING, or CAUTION. May be used in conjunction with other symbols or pictographs.

DANGER: Failure to obey this warning May result in serious injury to yourself or to others. Always follow the safety precautions to reduce the risk of personal injury.

CAUTION: Failure to obey this safety warning MAY result in serious injury to yourself or to others. Always follow the safety precautions to reduce the risk of personal injury.

CAUTION: Failure to obey this safety warning MAY result in personal injury to yourself or others or property damage. Always follow the safety precautions to reduce the risk of personal injury.

PARTS LIST

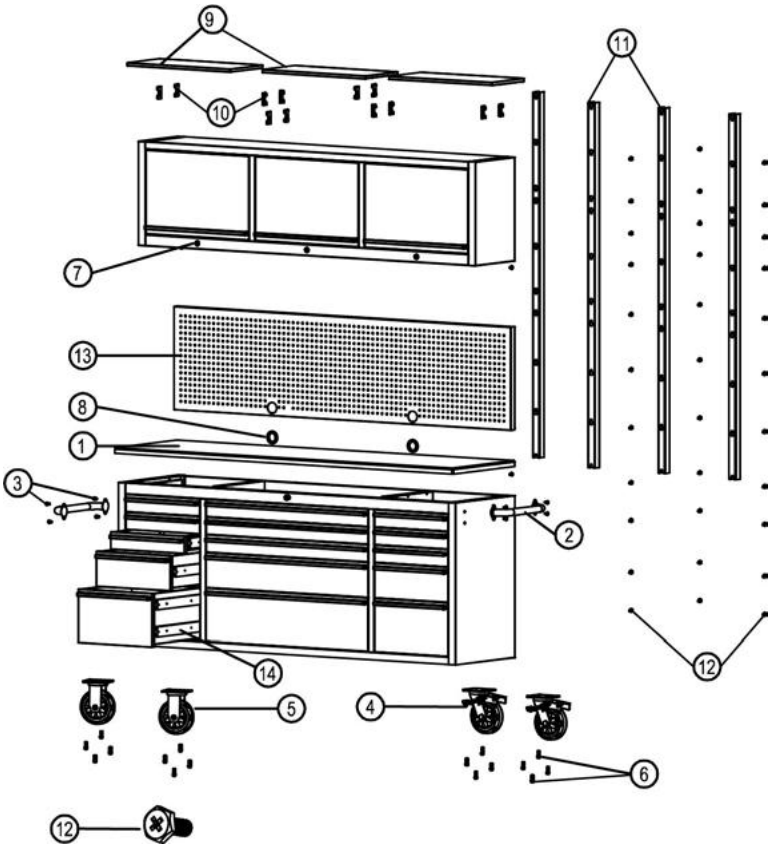

Ref#	Part#	Qty
1	Bench Top	1
2	Handle	2
3	1/4"*12mm Hex Bolt	8
4	Swivel caster(W/brake)	2
5	Rigid caster	2
6	3/8”*25 mm Hex Bolt	16
7	Lock and Key	4
8	Grommet	2
9	Shelffor upper cabinet	3
10	Hook	12
11	Rails	4
12	1/4"*14 mm Hex Bolt	40
13	Pegboard	1
14	Slide Sets	36

ASSEMBLY

NECESSARY TOOLS REQUIRED FOR ASSEMBLY

- 10 mm socket (for cabinet side handles)
- 12 mm socket
- screwdriver

INSTALL THE HANDLE

Position the handle over the holes and attach with the 1/4”*14 mm hex bolts provided. Tighten securely using a 10 mm socket.

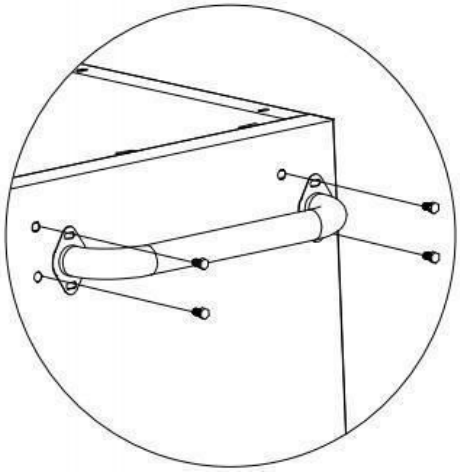

INSTALL THE CASTERS

Carefully lay the cabinet on its back using a soft mat under the back for protection. Position two swivel casters on the bottom of the cabinet, on the right side (same side as the handle). Insert 3/8’’*25 mm hex bolts through the casters and into the bottom of the cabinet.Tighten securely using a 12 mm socket. Repeat for the two rigid casters on the other side of cabinet.

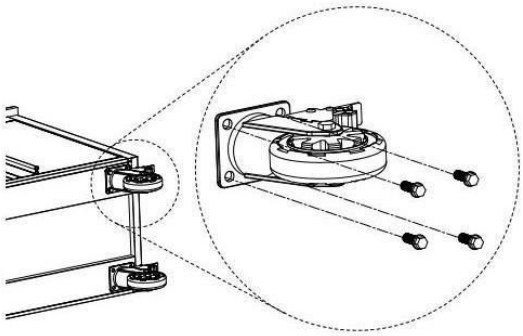

RAIL, PEGBOARD AND UPPER CABINET INSTALLATION

Attach the four rails to the tool cabinet with four 1/4" x 14 mm hex bolts each.

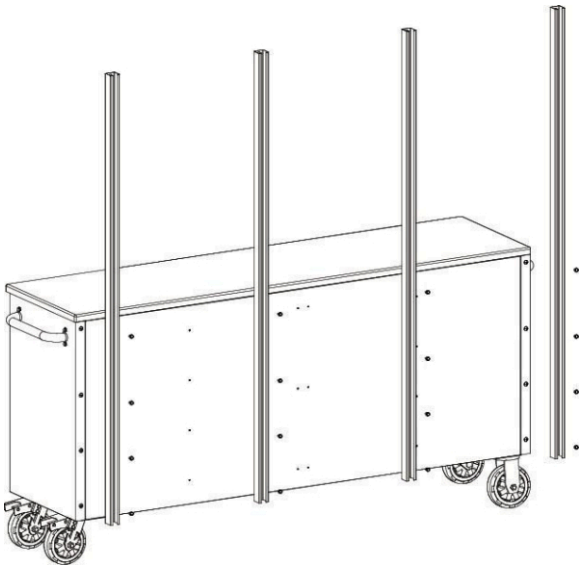

ASSEMBLY

Attach the pegboard to the rails with twelve 1/4" x 14 mm hex bolts.

Attach the upper cabinet to the rails with twelve 1/4" x 14 mm hex bolts.

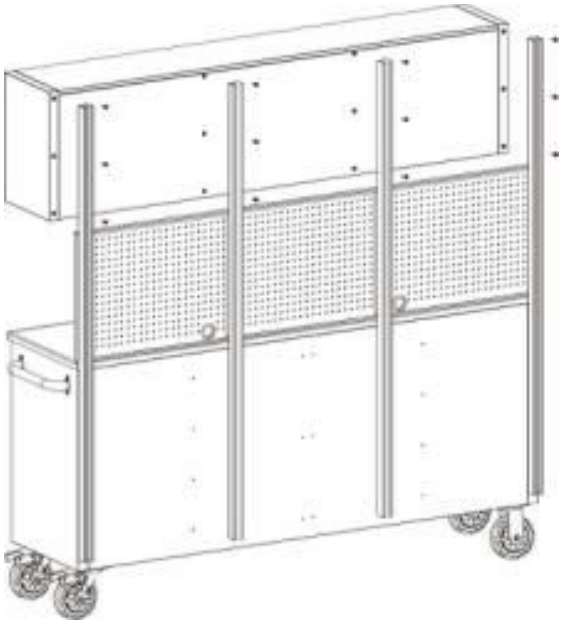

SHELF ASSEMBLY

Insert four hooks inside the upper cabinet at the desired height. Place the shelf on the shelf supports. Repeat for the other shelves

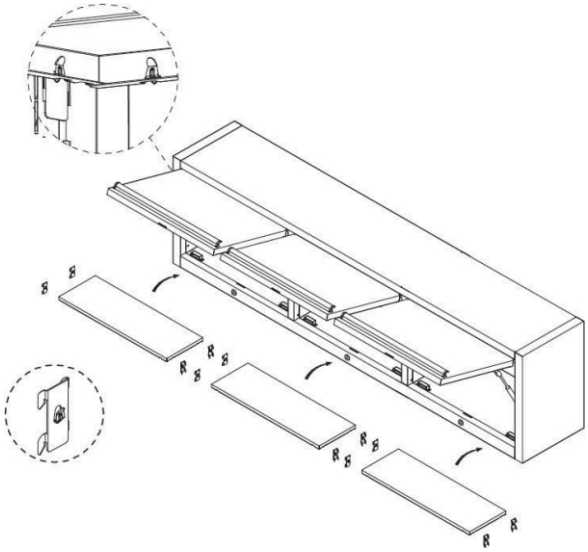

TO REMOVE DRAWERS

Pull the drawer out so it is almost fully extended. **PUSH UP ON THE LEFT** hand black release lever, while PULLING DOWN ON THE RIGHT hand black release lever. While holding the levers in the positions as instructed above, pull the drawer outward until it is released from the drawer slide.

PUSH UP (LEFT HAND SIDE)

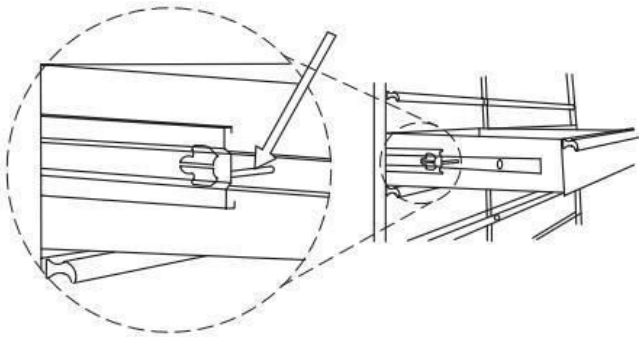

PULL DOWN (RIGHT HAND SIDE)

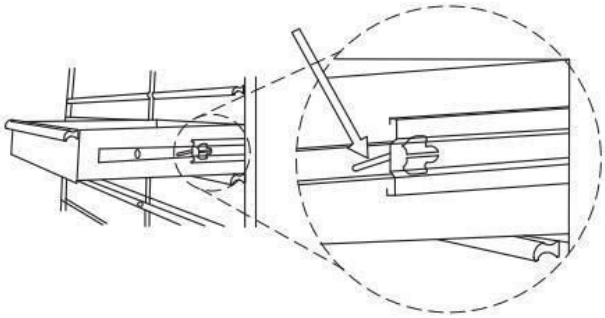

TO REPLACE DRAWERS

Extend the drawer slides from the tool chest. Insert the brackets on each cabinet slides, being careful that they are positioned properly. Once properly inserted, completely close the drawer to set the slides in their proper positions.

MAINTENANCE

For casters, use high quality bearing grease(annually/yearly).
Lubricate the slides (twice a year) with a product like WD40 or other quality lubricant. This is especially important when the temperature decreases, as the bearing can become stiff.
Periodically the drawer fronts, drawer trim, and other surfaces should be cleaned with mild detergent and water.
Using solvents of any kind on the wood top may damage the finish. Liquid spills should be removed immediately. Using a soft clean cloth, blot the spill gently. Avoid rubbing.

SAFETY

WARNING: Lock the drawers before moving this product. The drawers could come open and make the product unstable and tip, which may cause personal injury or product damage.

CAUTION: The maximum weight for each drawer should be no more than 100 lbs.

CAUTION: The maximum product weight, including contents, should be no more than 2000 lbs for roller cabinets.

WARNING: DO NOT attempt to lift the cabinet by its side handles using chains, ropes or other lifting devices. Use a forklift placed under the bottom of the cabinet. The side handle could fail, which may cause personal injury or damage to the product.

WARNING: DO NOT stand on this product or lean on the worktop.

WARNING: WEAR SAFETY GLASSES when removing or re-positioning the slides. The tool could slip, which may cause personal injury.

CAUTION: When moving this product, do not pull it. Push the product to prevent personal injury.

CAUTION: USE THE BRAKES when not moving this product. This will prevent the product from rolling, which may cause personal injury or product damage.

MAINTENANCE AND SAFETY

⚠ CAUTION: BE CAREFUL when opening more than one drawer. The product could become unstable and tip, which may cause personal injury or product damage.

⚠ WARNING: DO NOT mount this product on a truck bed or any other moving object. This may cause personal injury or product damage.

⚠ CAUTION: Secure this product properly before moving it with a forklift.

⚠ WARNING: DO NOT tow with power equipment. The product could tip, which may cause personal injury or product damage.

⚠ CAUTION: DO NOT alter this product in any manner. For example, do not weld external lock bars or attach electrical equipment. This may cause product damage or personal injury.

⚠ CAUTION: Keep this product on level surfaces. The product may become unstable and tip if stored or moved on an uneven surface, which may cause personal injury or product damage.

ANTI TIPPING HARDWARE KIT

WARNING

PLEASE NOTE: WE STRONGLY RECOMMEND THAT THIS PRODUCT IS PERMANENTLY FIXED TO A WALL
PLEASE USE THE PROVIDED "TIP OVER PREVENTION KIT" TO SECURELY FIX PRODUCT TO YOUR WALL

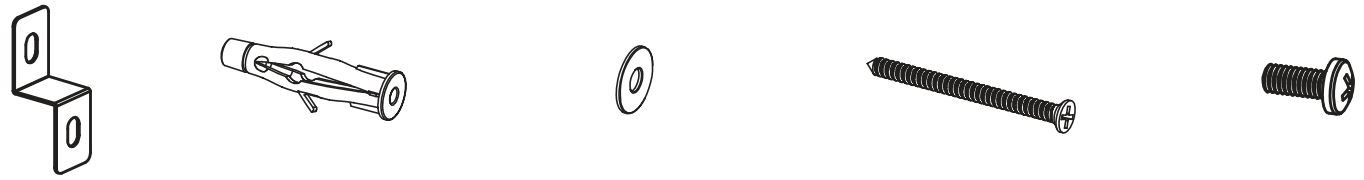

A x 2 B x 2 C x 2 D x 2 E x 2

IT IS STRONGLY RECOMMENDED THAT YOU ANCHOR THIS PRODUCT.

TOPPLING FURNITURE CAN CAUSE SERIOUS INJURIES AND DEATH.

A "TIP OVER PREVENTION KIT" HAS BEEN PROVIDED WITH THIS PRODUCT TO STOP YOUR FURNITURE FROM TIPPING FORWARD. IT IS STRONGLY RECOMMENDED THAT YOU SECURELY ATTACH THIS PRODUCT TO A WALL OR OTHER SOLID SURFACE USING THE PROVIDED FIXINGS.

IMPORTANT: REGULARLY CHECK THAT ANCHORS ARE SECURELY MAINTAINED. STABILITY OF TALL ITEMS MAY BE AFFECTED BY THICK PILE CARPET OR UNEVEN FLOORS.

CAUTION:
FOR YOUR SAFETY WHEN ATTACHING THE ANCHOR FIXINGS, PLEASE NOTE THE FOLLOWING:

- CHECK FOR ANY ELECTRICAL WIRES OR PLUMBING INSIDE THE WALL BEFORE DRILLING ANY HOLES (IF YOU ARE UNSURE PLEASE SEEK PROFESSIONAL ADVICE FROM A QUALIFIED TRADESPERSON)
- WALLS ARE CONSTRUCTED FROM DIFFERENT MATERIALS, FOR EXAMPLE, MASONRY (SOLID BRICK) OR PLASTERBOARD LINED CAVITY WALLS (HOLLOW). IT IS IMPORTANT THAT YOU USE THE APPROPRIATE FIXINGS FOR YOUR WALL TYPE.

Installation for Brick, Masonry Wall and Plaster Wall

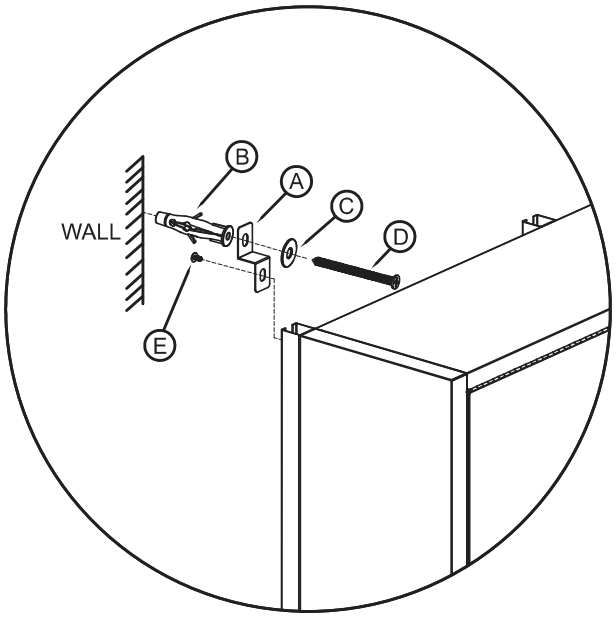

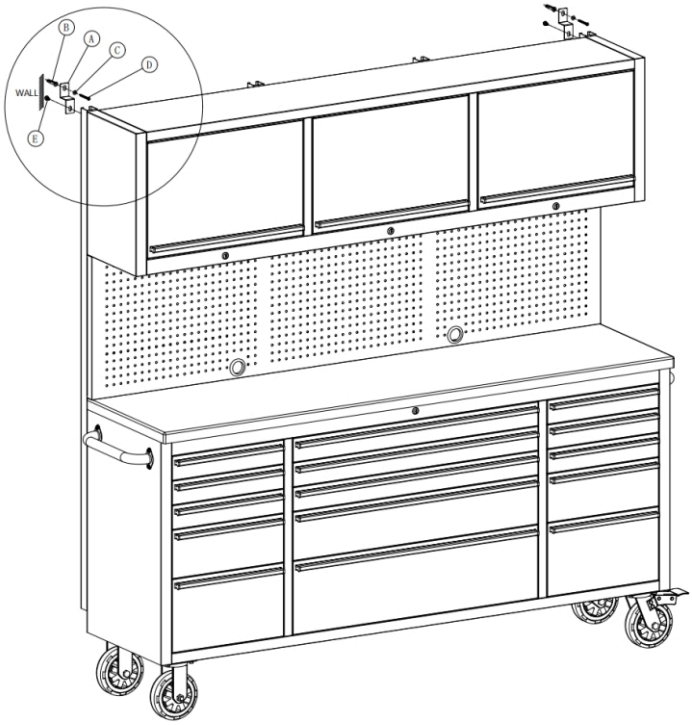

Limited Liability & Warning

No Unauthorized Modifications/Repairs: Do not modify or attempt to repair this product unless you are an authorized technician. Unauthorized actions may create hazards and void all warranties

Misuse & Non-Compliance: We are not liable for any injury, damage, or loss resulting from:

(a) misuse, abuse, neglect, or improper installation;

(b) failure to follow instructions or safety precautions;

(c) use of unauthorized parts/accessories;

(d) unauthorized modifications/repairs;

(e) accidents, natural disasters, or external causes.

If you doubt any step of installation or operation, stop using the product and contact authorized service or the customer support.

LIMITACIÓN DE RESPONSABILIDAD Y ADVERTENCIA

Modificaciones o Reparaciones No Autorizadas: NO modifique ni intente reparar este producto a menos que sea un técnico autorizado. Las acciones no autorizadas pueden generar riesgos y anularán todas las garantías.

Uso Indebido e Incumplimiento: No asumimos responsabilidad alguna por lesiones, daños o pérdidas que resulten de:

(a) uso indebido, abuso, negligencia o instalación incorrecta;

(b) incumplimiento de las instrucciones o precauciones de seguridad;

(c) uso de piezas o accesorios no autorizados;

(d) modificaciones o reparaciones no autorizadas;

(e) accidentes, desastres naturales o causas externas.

Si tiene dudas sobre algún paso de la instalación o el funcionamiento, deje de usar el producto y póngase en contacto con el servicio técnico autorizado o con atención al cliente.

GARVEE

support@garvee.com