Owner Manual



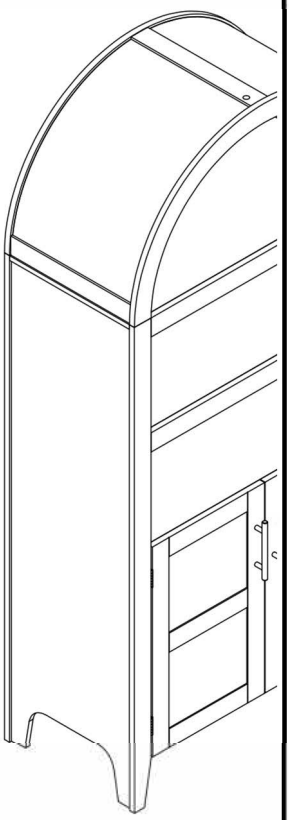

WARRANTY

We strive to offer high quality product and we also try our best to satisfy each customer that order from us, no matter on products or services as needed. Each customer receives a record of their order, such as the order number or item receipt. For any items that are out of warranty period, you may still be able to purchase the replacement parts from our company if they are available.

MAINTENANCE AND WARNING

If you are experienced in furniture assembly, you may work alone. Otherwise, please assemble with assistance.

Follow the step-by-step instructions carefully. This instruction manual will reduce your assembly time and difficulties. Please pay close attention to part orientation and fitment during assembly.

Keep away from heat and open flames.

Protect the surface from sharp or abrasive objects.

Do not use harsh cleaners, polishes, or solvents.

Use a mild soap and warm water solution (1:10) to clean.

Do not place in direct sunlight; fading may occur over time.

Avoid jumping or striking the cabinet. Do not write on it without a protective surface.

For residential use only. Not designed for commercial use.

Do not jump on the product.





Two people





Around 60min

PRODUCT DESCRIPTION

Features an arched curved top with slim gold bar handles for soft vintage lines. The matte black wood grain finish delivers sophisticated texture, matching French, retro, light luxury and modern decor styles.

Crafted from premium high-density manufactured wood with ultra-smooth surface. Bonded wood grain veneer resists scratches, peeling and bubbling. Dense fiber structure and wrapped edge sealing enhance moisture resistance and stability.

Full-height back, reinforced double doors. Four angled legs ensure stable, wobble-free support. Warp-resistant panels with magnetic latches for easy opening.

Practical Mixed Storage: three open shelves plus a concealed double-door cabinet.

Multi-Functional adjustable shelves allow custom heights for dinnerware, glasses, books and baskets, separating display and clutter neatly.

Open and closed tiered shelves maximize capacity, organizing tableware and utensils. Full anti-tip hardware secures it to the wall, safer for homes with kids or pets.

EXPLODED VIEW

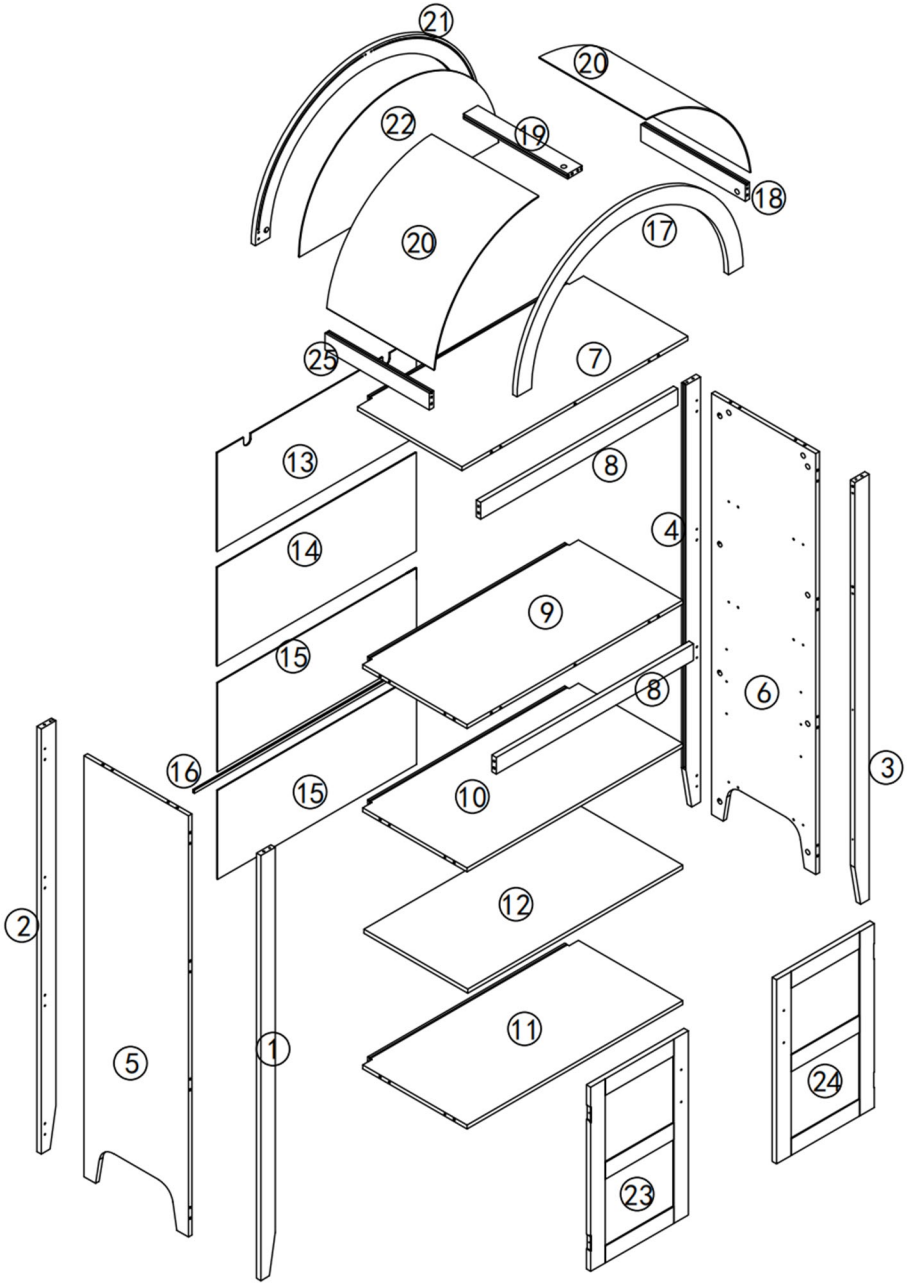

PARTS

① x1  Support bar	② x1  Support bar	③ x1  Support bar	④ x1  Support bar
⑤ x1 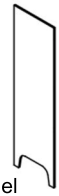 Side panel	⑥ x1  Side panel	⑦ x1 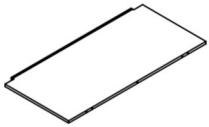 Partition Panel	⑧ x2 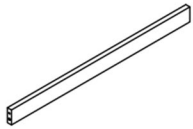 Front bar
⑨ x1 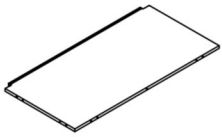 Partition Panel	⑩ x1 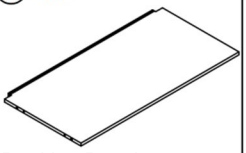 Partition Panel	⑪ x1 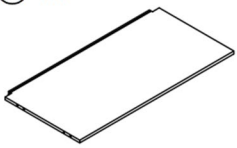 Partition Panel	⑫ x1 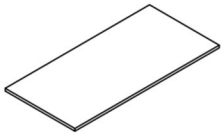 Partition Panel
⑬ x1 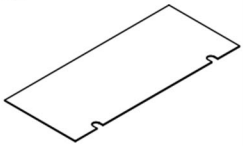 Back Panel	⑭ x1 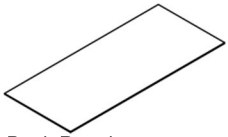 Back Panel	⑮ x2 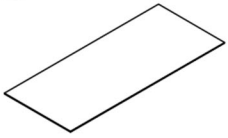 Back Panel	⑯ x1  Long panel
⑰ x1  Front arched panel	⑱ x1 ㉕ x1  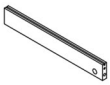 Side board Side board	⑲ x1  Middle board	⑳ x2 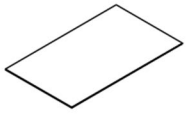 Arched panel
㉑ x1  Back arched panel	㉒ x1  Semicircular back panel	㉓ x1 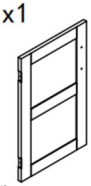 Door	㉔ x1 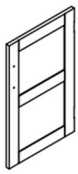 Door

HARDWARE

TOOL LIST

NOTE: Designated with (★) We provide additional spare parts in the hardware package

A x 45 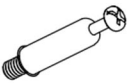 Cam bolt	B x 45  Cam nut	C x 50  Wooden dowel Ø6*30mm	D x1  Screwdriver
E x 32  Screw M3.5 x 12 mm	F x 35  Screw M3 x 16 mm	G x35  Backplate buckle	H x 4  Shelf support
J x 2 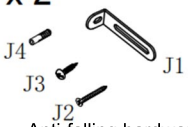 J4 J1 J3 J2 Anti-falling hardware	L x 4  Hinge	M x 2  Door magnetic plate	N x 2 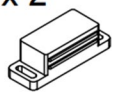 Magnetic catch
O x 3  Screw	P x 2 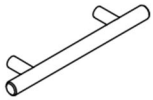 Handle	Q x 4  Screw	

Please make sure all hardware&packing material fitting the list. Especially some small accessories may be missing during transportation. Please contact us if you have any question.

step 1 ---Install the support bar(A)&Wooden dowel (C)

Insert cam bolt (A) into pre-drilled holes of support board (2&4) ,tighten it with screwdriver.
Insert wooden dowel (C) into it as shown.

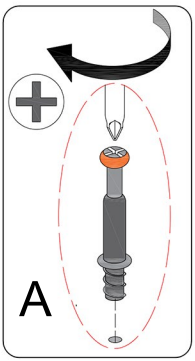

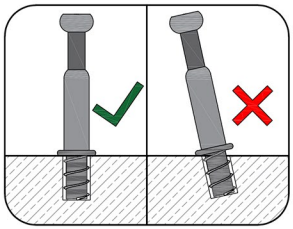

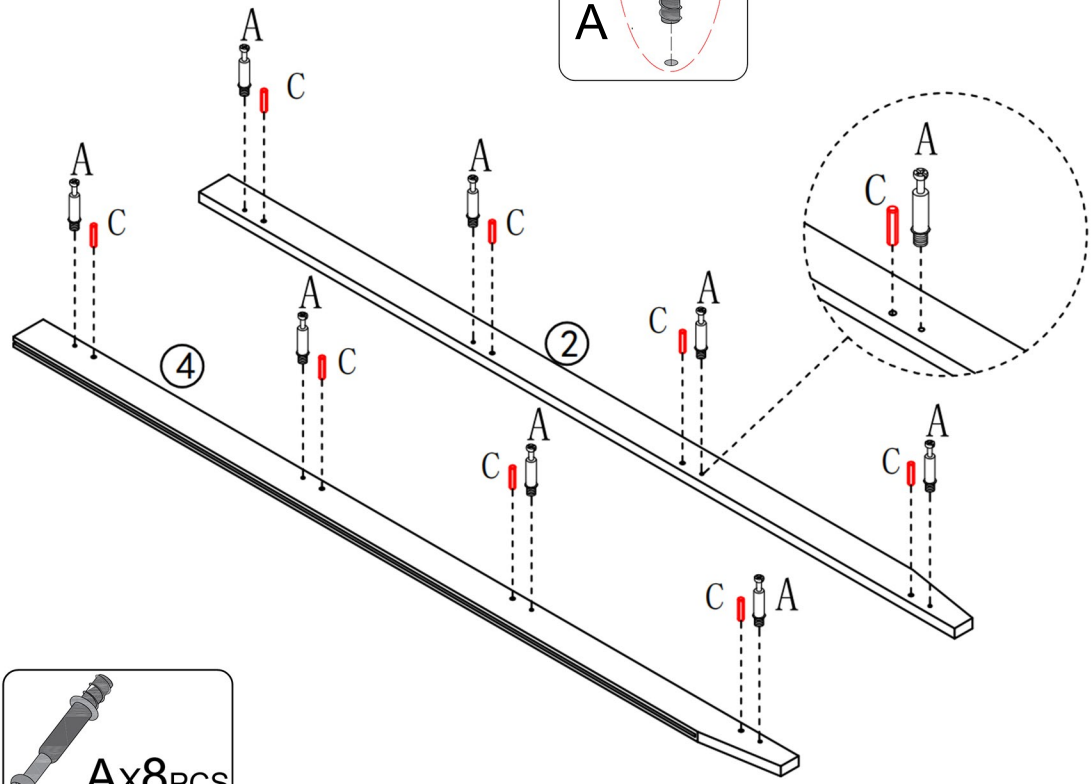
A
C
A
C
A
C

step 2 ---Install the support bar (4)

1.Insert support bar (4) into it as shown.
2.Insert Cam nut (B) into the pre-drilled holes of Side panel (6),tighten it with screwdriver.

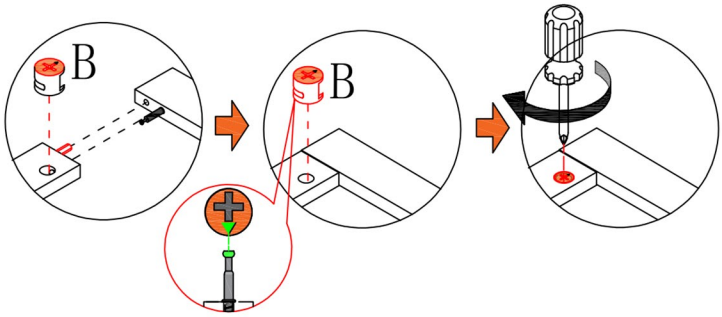

Three-in-One Connector Installation Diagram

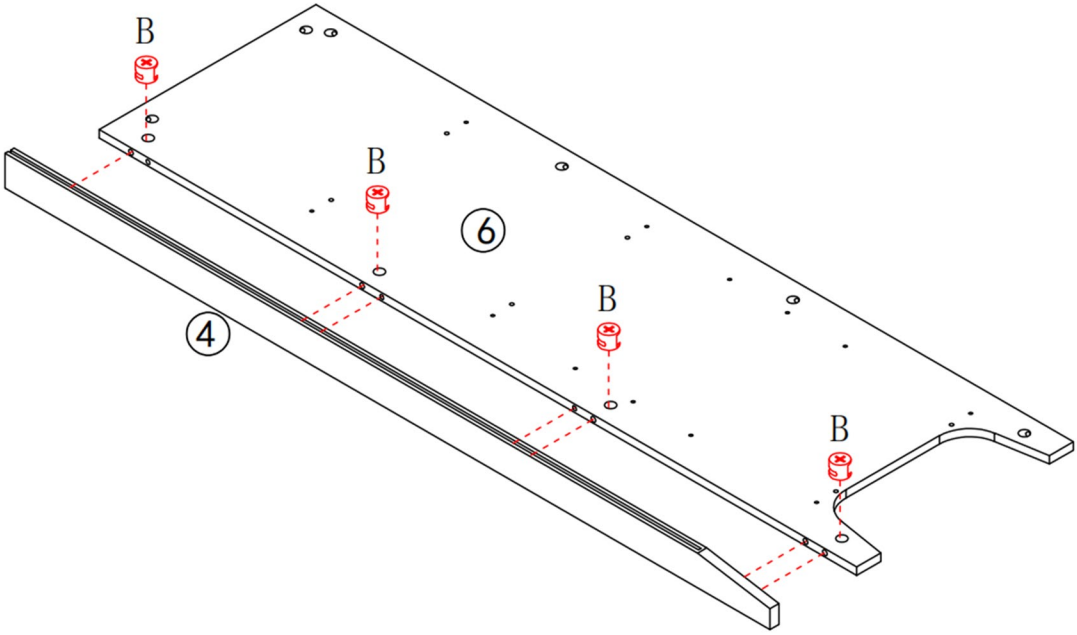



step 3 ---Install the support bar (2)

1.Insert support bar (2) into it as shown.
2.Insert Cam nut (B) into the pre-drilled holes of Side panel (5),tighten it with screwdriver.

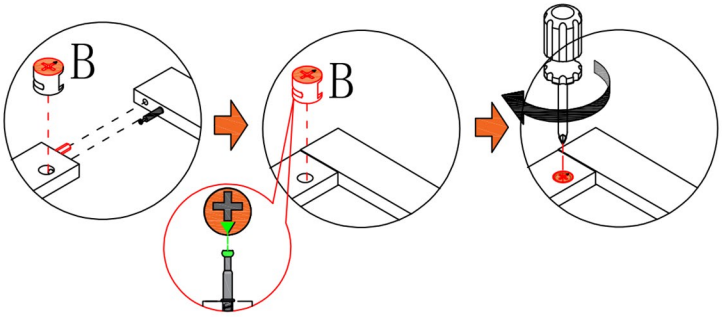

Three-in-One Connector Installation Diagram

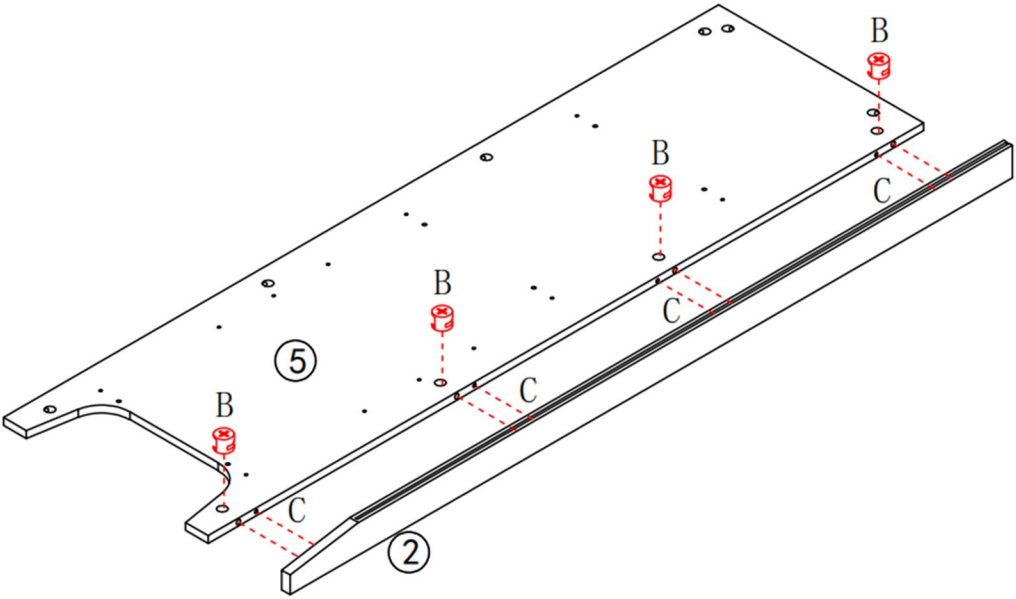



step 4 ---Install the cam bolt &Wooden dowel into Side panel (5&6)

1.Insert cam bolt (A) into pre-drilled holes of Side panel (5&6) ,tighten it with screwdriver.
2.Insert the wooden dowel (C) into it as shown.

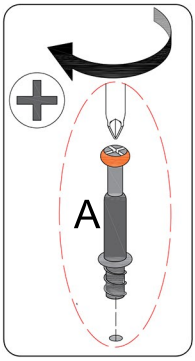

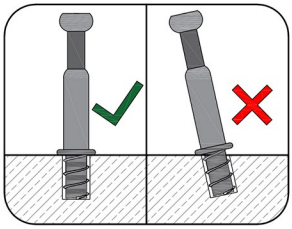

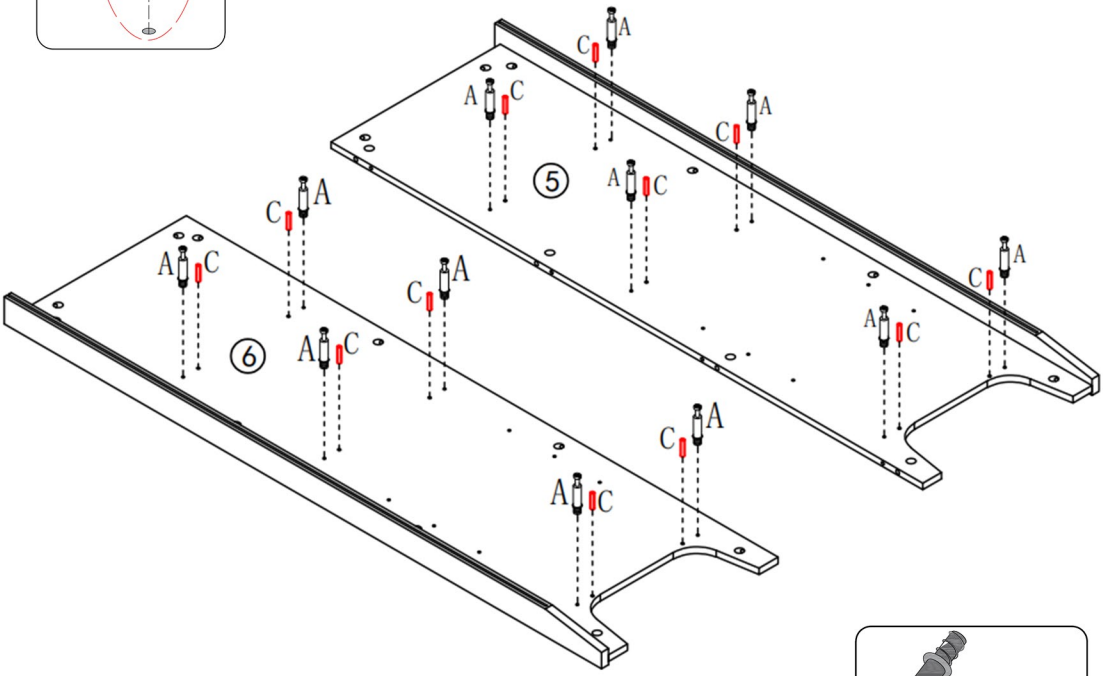





step 5 ---Install the anti-falling hardware and partition panel

1.Screw the cam bolt (A) into the corresponding hole of Partition panel (7).
2.Use screw (J3) to attach anti-falling hardware (J1) to Partition panel (7) , tighten it with screwdriver.
3.Use screw (E) to attach magnetic catch (N) to Partition panel (10), tighten it with screwdriver.

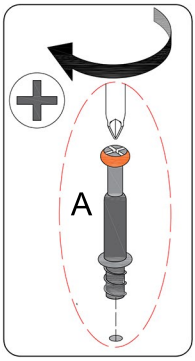

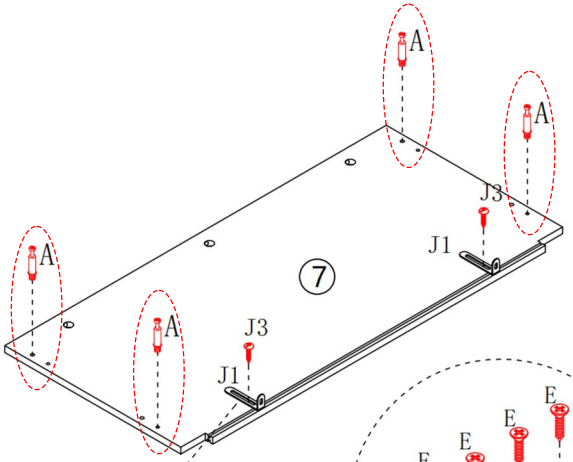

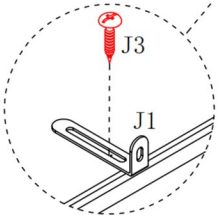

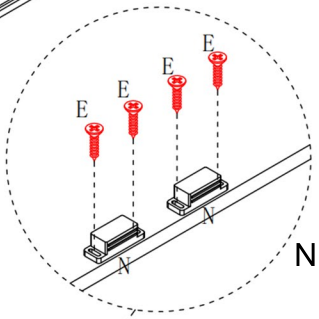

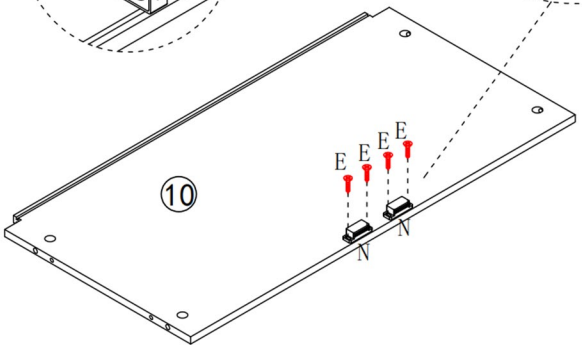

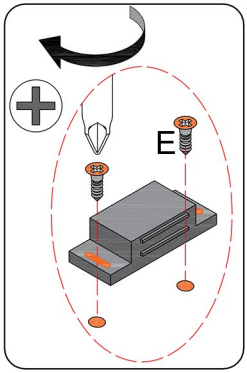


EX4PCS


J3X2PCS


NX2PCS

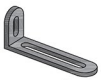
J1X2PCS

step 6 ---Install the partiton panel (9&10&11)

1.Insert the partition panel (9&10&11) into it.
2.Insert the cam nut (B) into the pre-drilled holes of partition panel (9&10&11),tighten it with screwdriver.

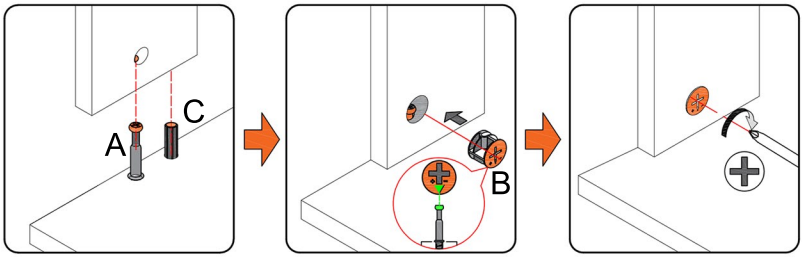

Three-in-One Connector Installation Diagram

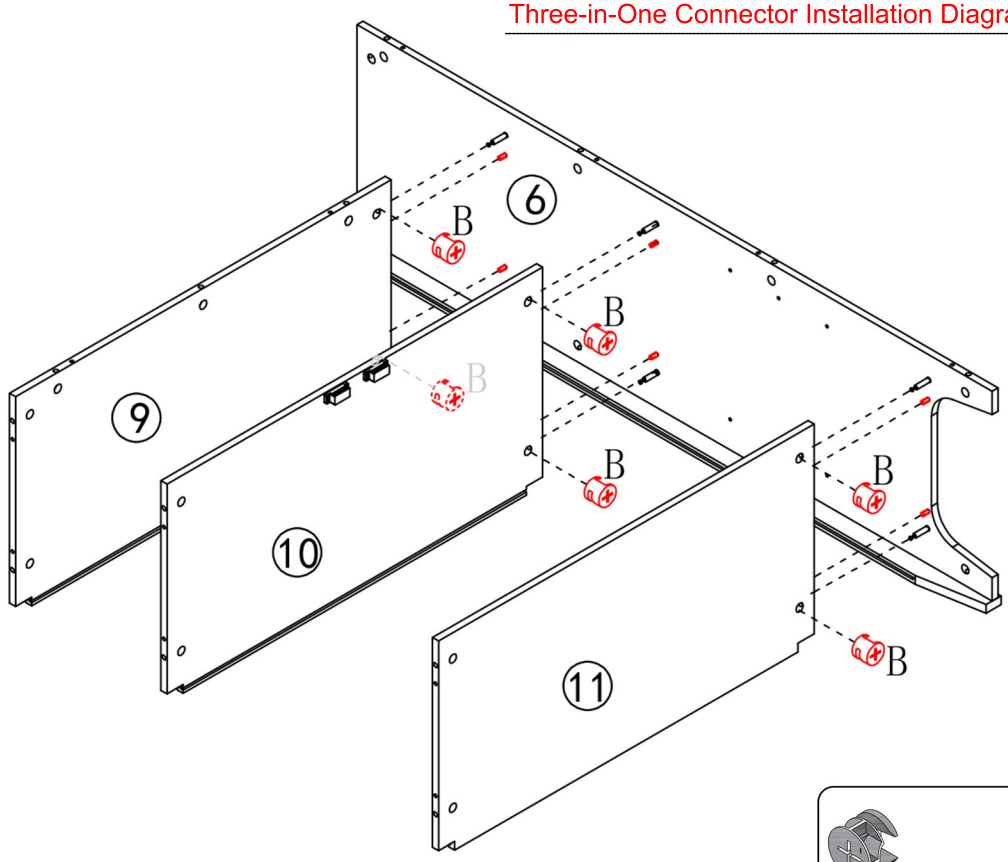



step 7 ---Install the Back panel (14&15)

Slide the Back panel (14&15) into the grooves along the partition panel (9,10&11). Ensure it fits flush and aligns tightly with the internal channels.

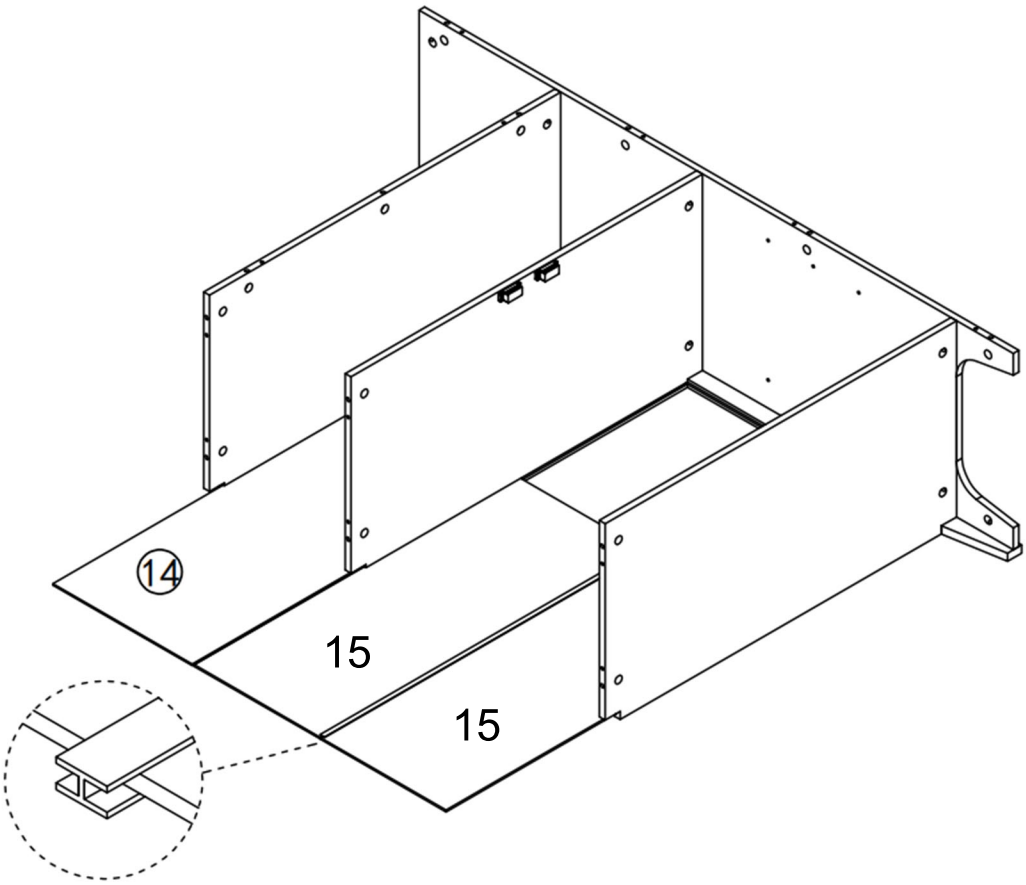

step 8 ---Install the side panel (5)

1.Insert the Side panel (5) into it as shown.
2.Insert the cam nut (B) into the pre-drilled holes of partition panel (9&10&11),tighten it with screwdriver.

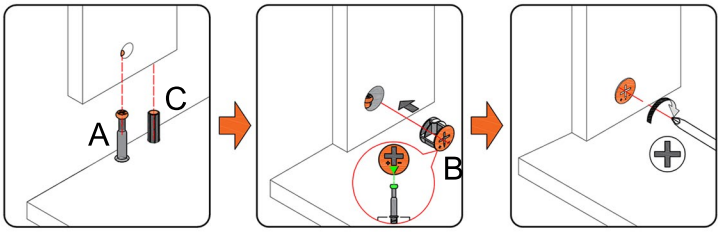

Three-in-One Connector Installation Diagram

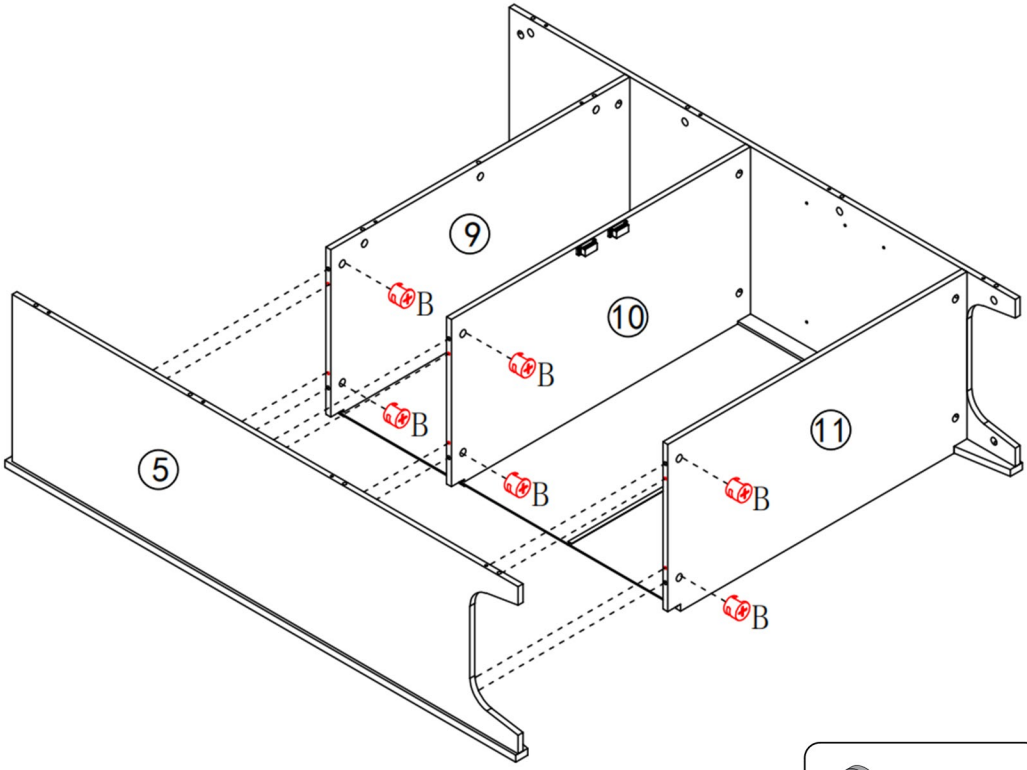



step 9 ---Install the back panel (13)

Slide the Back panel (13) into the grooves along the Side panel (5&6).

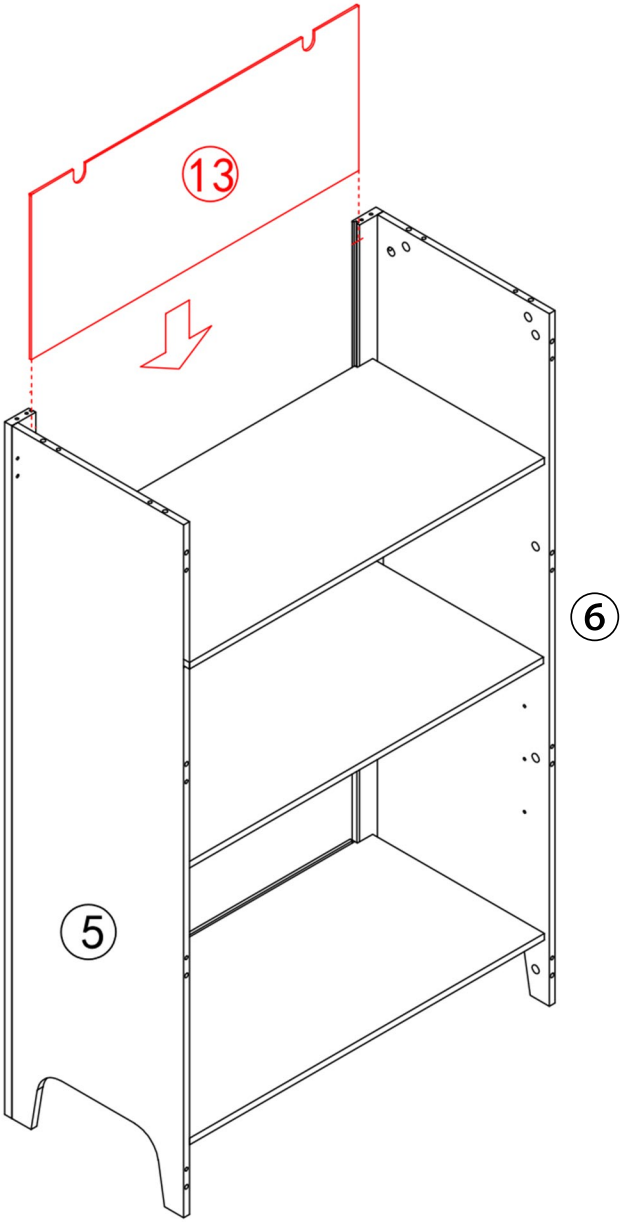

step 10 ---Install the Partition panel (7)

1.Install the wooden dowel (C) into the pre-drilled holes of side panel (5&6).
2.Insert the partition panel (7) into it.
3.Insert the cam nut (B) into the pre-drilled holes of side panel (5&6), tighten it with screwdriver.

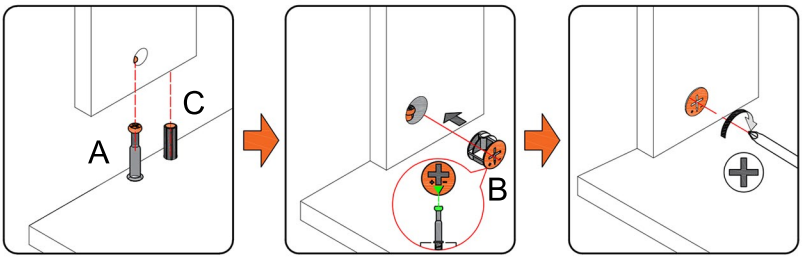

Three-in-One Connector Installation Diagram

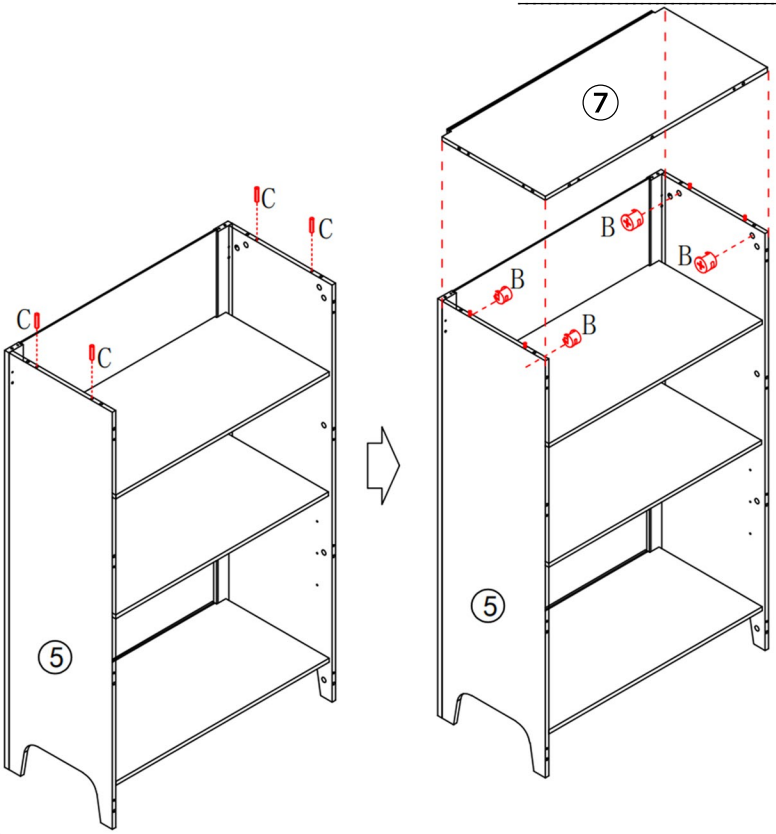

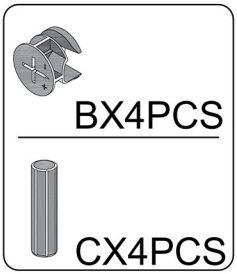

step 11 ---Pre-installed Support bar(1&3)&Front bar (8)

1.Insert the cam bolt (A) into the pre-drilled holes of Support bar (1&3), tighten it with screwdriver.
2.Use screw (E) to attach Hinge (L) to support bar (1&3) as shown.
3.Insert the cam bolt (A) into the pre-drilled holes of Front bar (8), tighten it with screwdriver.

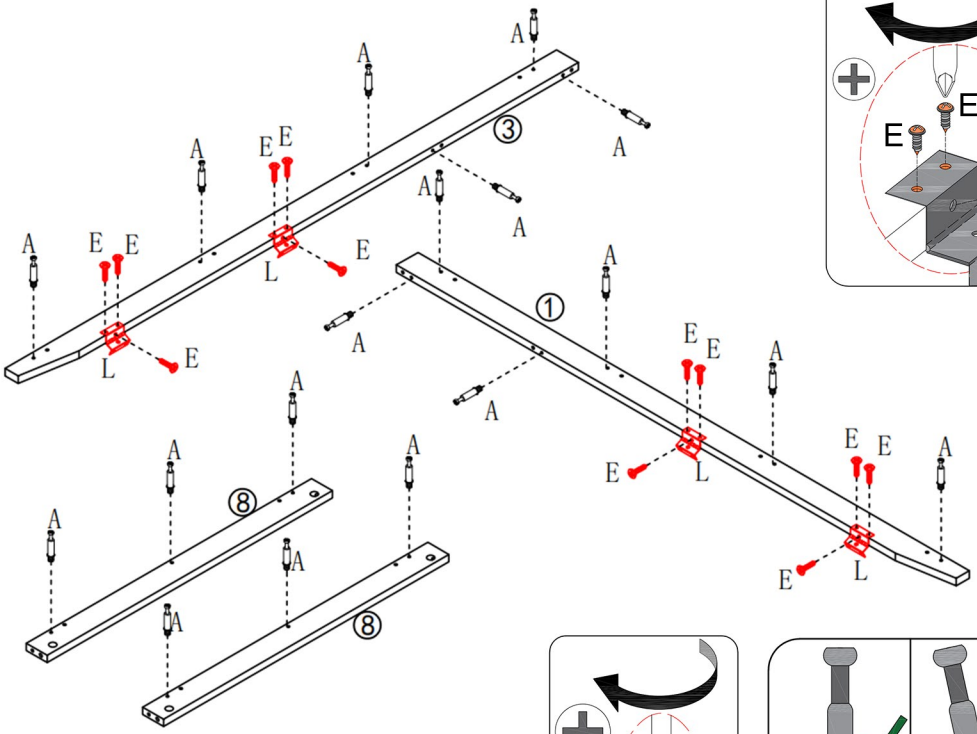

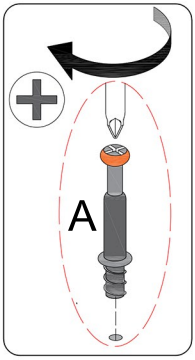

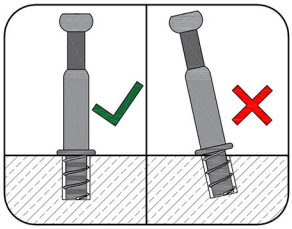

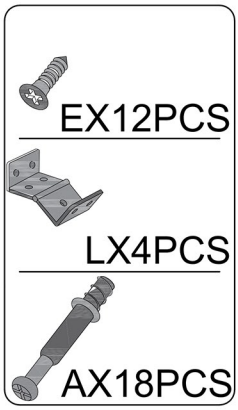

step 12 ---Install the Front bar (8)

1.Install the wooden dowel (C) into the pre-drilled holes of Front bar (8).
2.Insert the Front bar (8) into it as shown.
3.Insert the cam nut (B) into the pre-drilled holes of Front bar (8),tighten it with screwdriver.

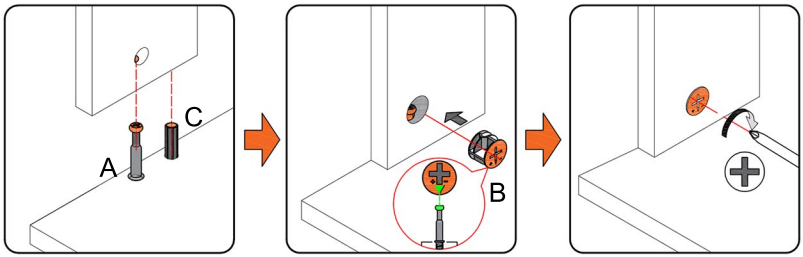

Three-in-One Connector Installation Diagram

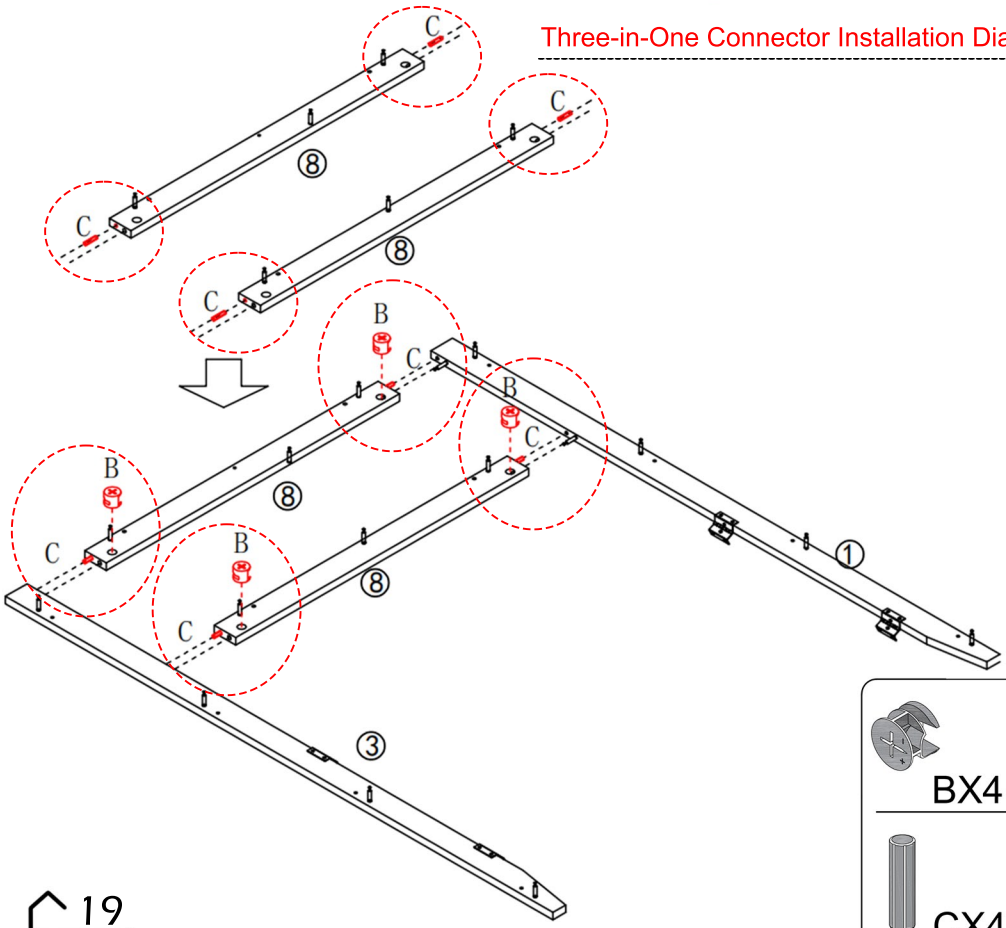

step 13 ---Install the Pre-assembly part at step 12

1.Install the wooden dowel (C) into the pre-drilled holes of Side panel (5&6) and partition panel (7&9&10).
2.Insert the pre-assembly part at step 12 into it as shown.
3.Insert the cam nut (B) into the pre-drilled holes of Side panel (5&6)and partition panel (7&9&10),tighten it with screwdriver.

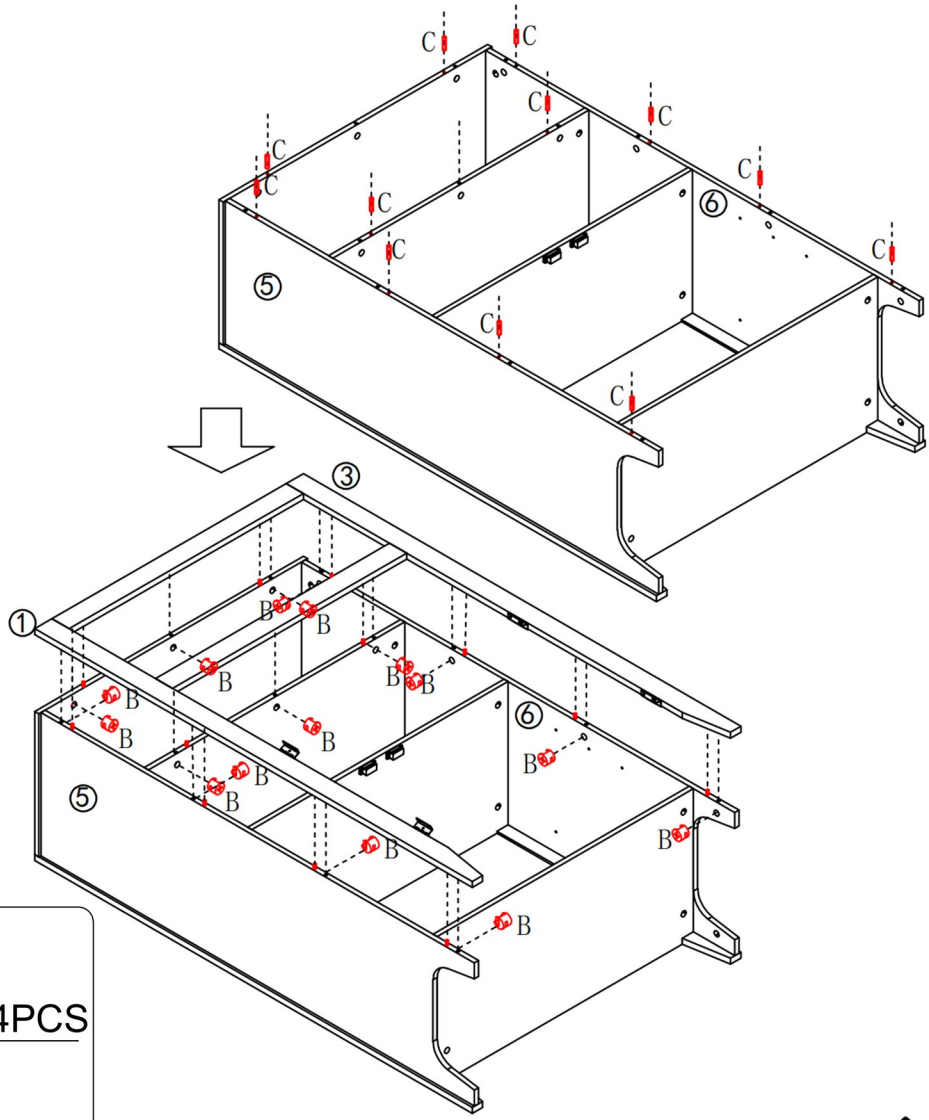


BX14PCS


CX12PCS

step 14---Install the Cam bolt (A)

Align with the pre-drilled holes and use a screwdriver to screw cam bolt (A) into the corresponding position on partition panel (7) as shown.

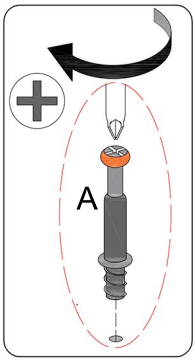

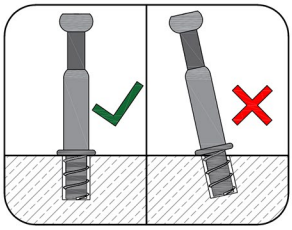

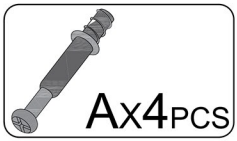

step 15 ---Install the Cam bolt (A)&wooden dowel (C)

1.Insert the cam bolt (A) into the pre-drilled holes of Front arched panel (17).
2.Insert the wooden dowel (C) into Front arched panel (17) as

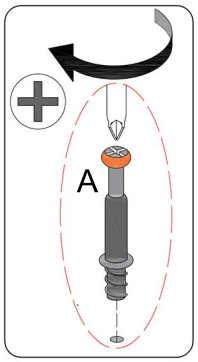

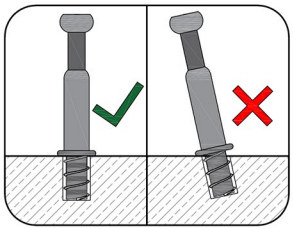





step 16 ---Install the Side board (18&25)

1.Insert Side panel (18&25) into it as shown.
2.Insert the cam nut (B) into the pre-drilled holes of Side panel (18),tighten it with screwdriver.

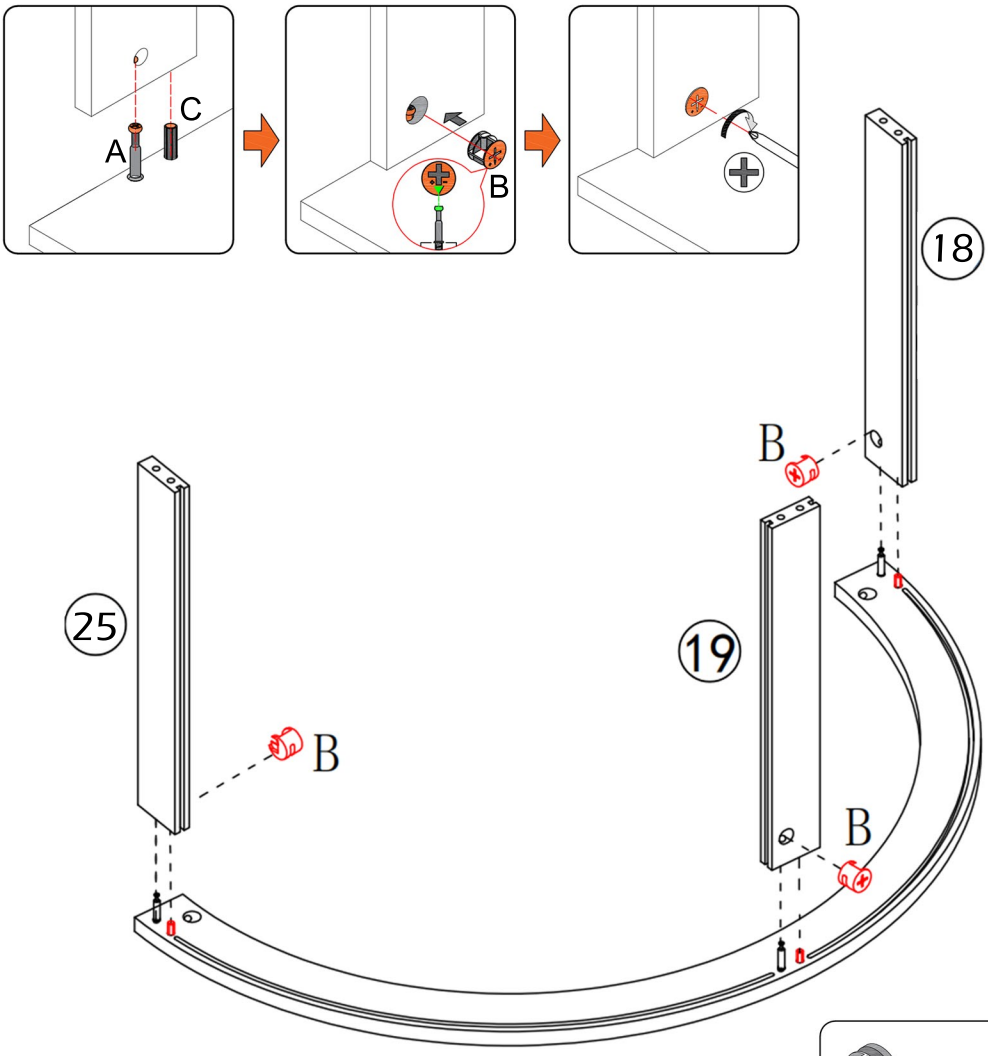



step 17---Install the Arched panel (20)

Slide the Arched panel (20) into the grooves along the Side board (18). Ensure it fits flush and aligns tightly with the internal channels.

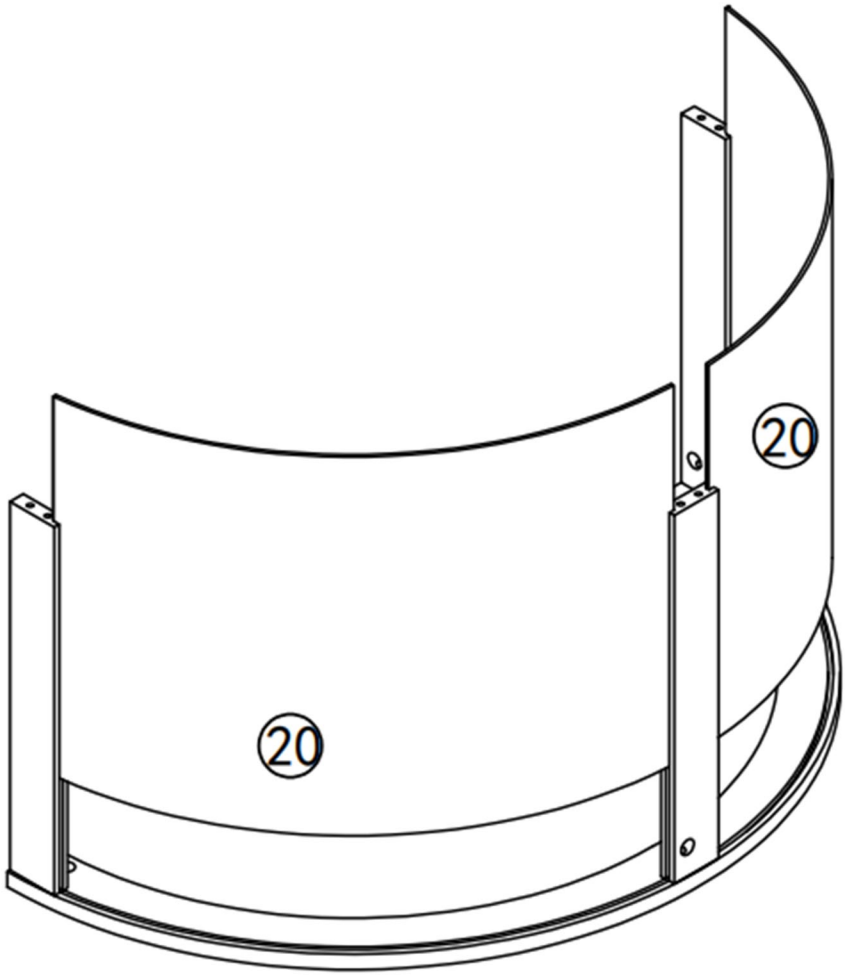

step 18 ---Install the Back arched panel (21)

1.Insert Wooden dowel (C) into pre-drilled holes of Side board(18) ,and then insert Back arched panel (21) into it as shown.
2.Insert screws (O) into the pre-drilled holes of Back arched panel (21), tighten it with screwdriver.

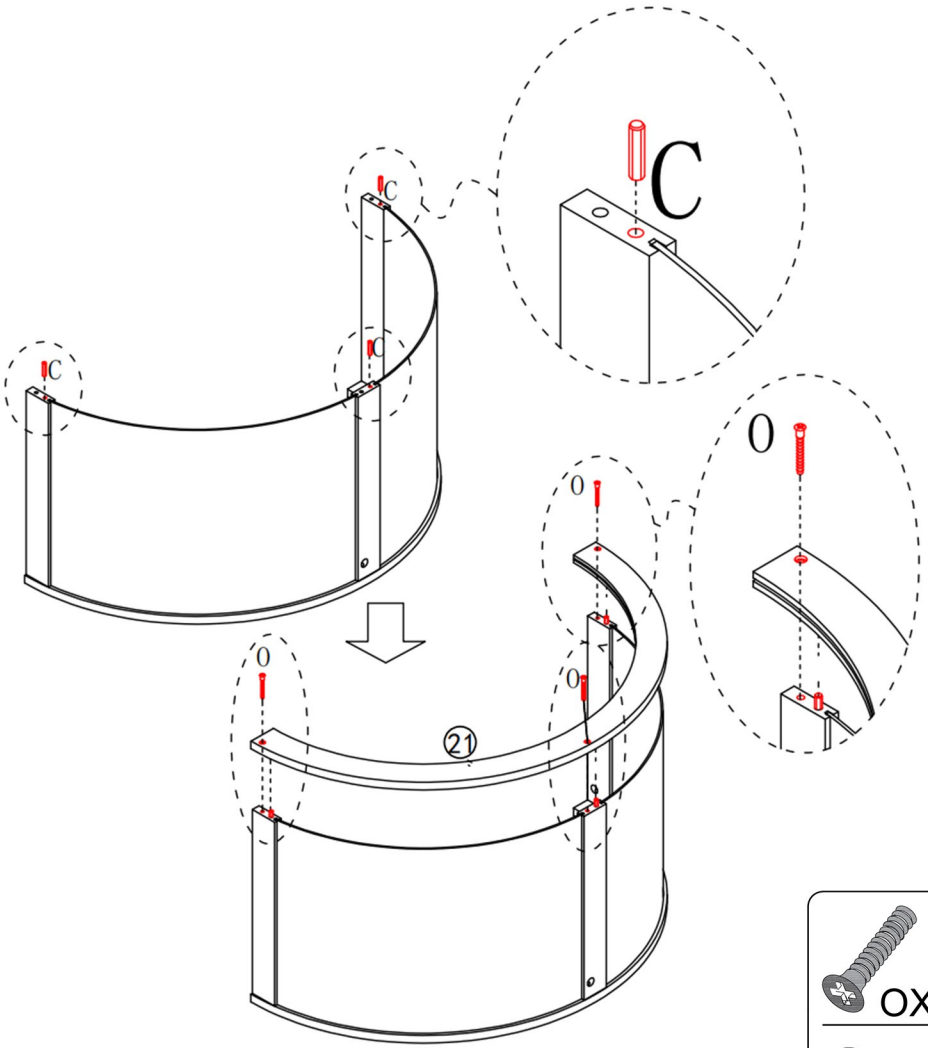

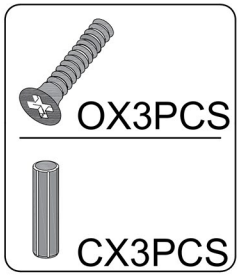

step 19 ---Install the Pre-assembly part at step18

1.Insert Wooden dowel (C) into pre-drilled holes of Partition panel (7) as shown.
2.Insert the Semicircular Back panel (22) into it as shown.
3.Insert Pre-assembly part at step 18 into Partition panel (7) as shown.
4.Insert Cam nut (B) into the pre-drilled holes of Arched panel (17&21), tighten it with screwdriver.

At this step, be sure to insert the wooden dowel (C) first !

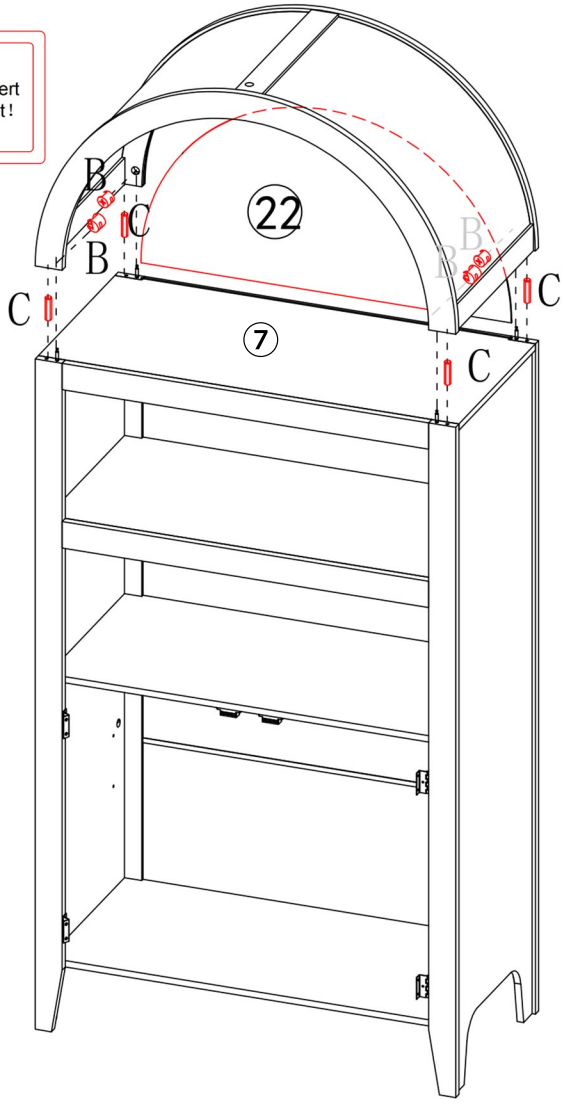

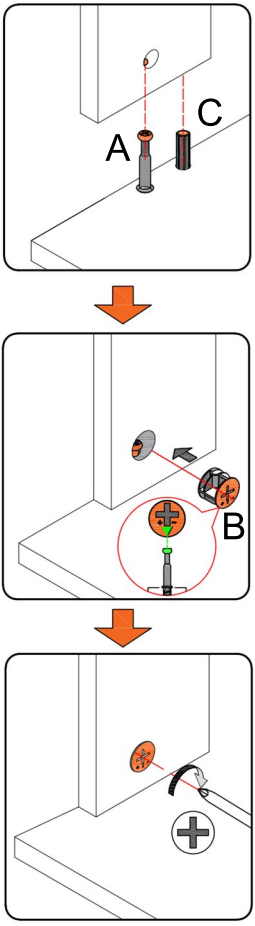



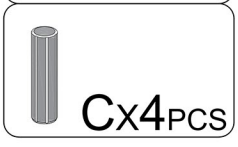

step 20 ---Install the Partition panel (12)

1.Insert Shelf support (H) into the pre-drilled holes of Side panel (5&6) as shown.
2.Place the Partition panel (12) on it as shown.

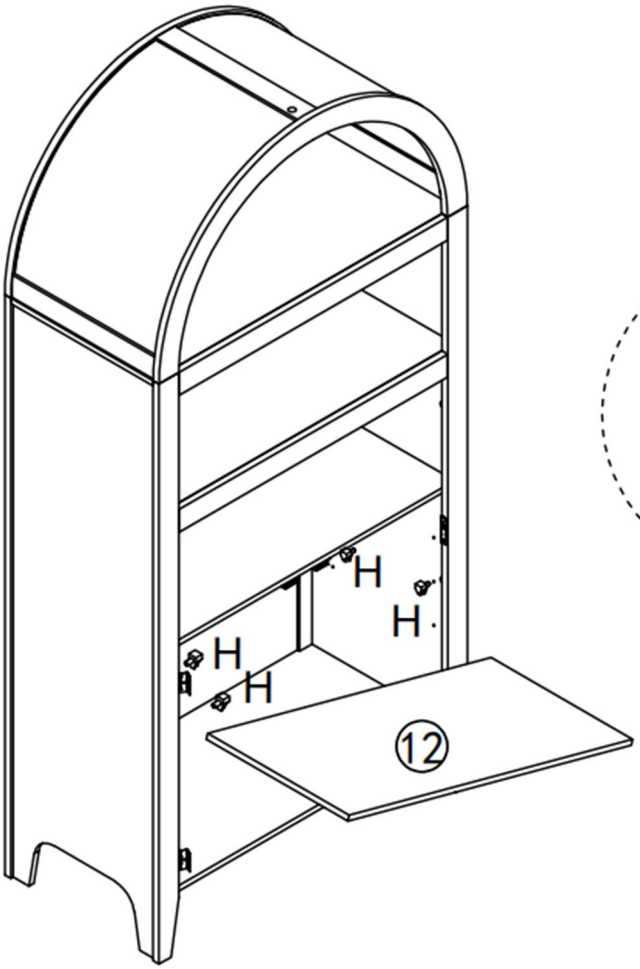

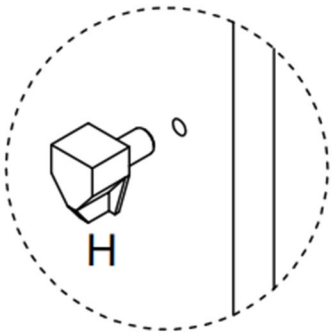



step 21 ---Install the Door magnetic plate (M) & Handle (P)

1.Use screw (E) to attach Door magnetic plate (M) to Door (23&24),tighten it with screwdriver.
2.Use screw (Q) to attach Handle (P) to Door (23&24), tighten it with screwdriver.

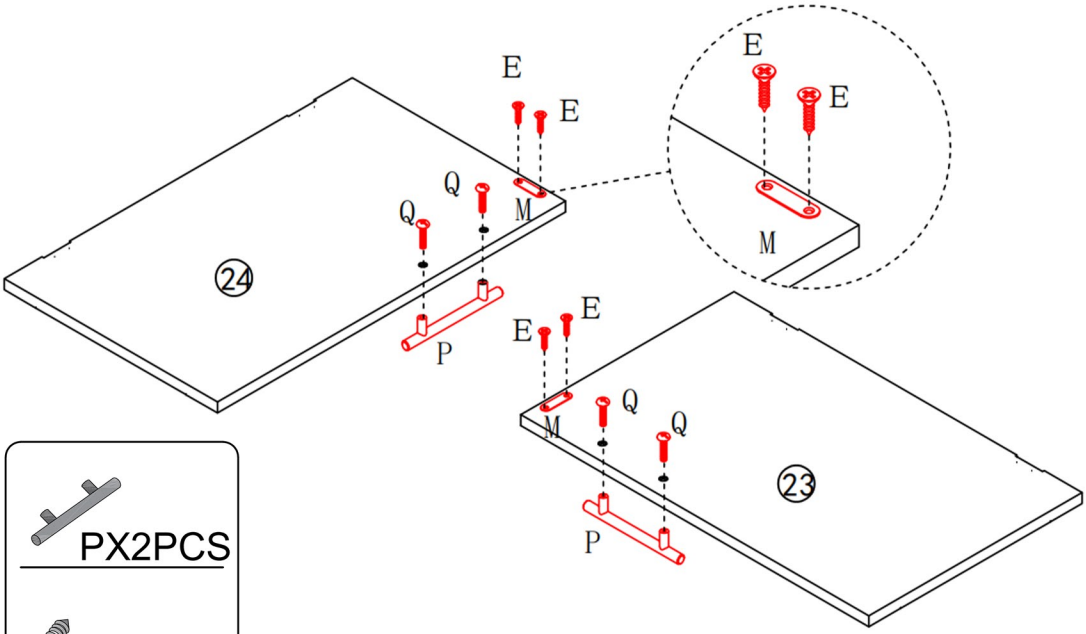

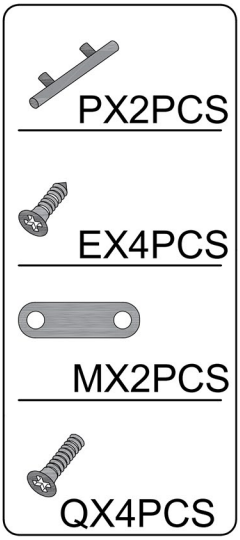

step 22 ---Install the Door (23&24)

Use screw (E) to attach Door (23&24) to Support bar (1&3) as shown, tighten it with screwdriver.

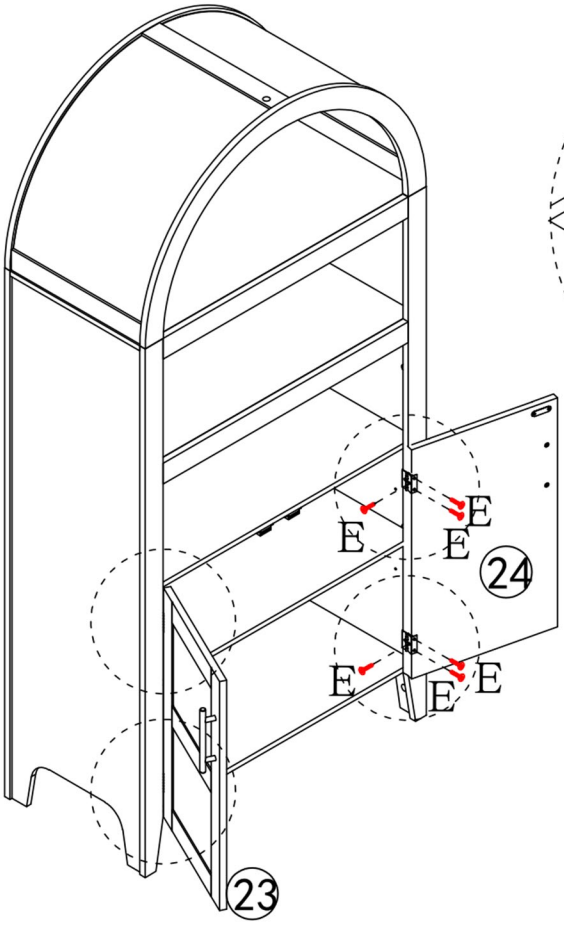

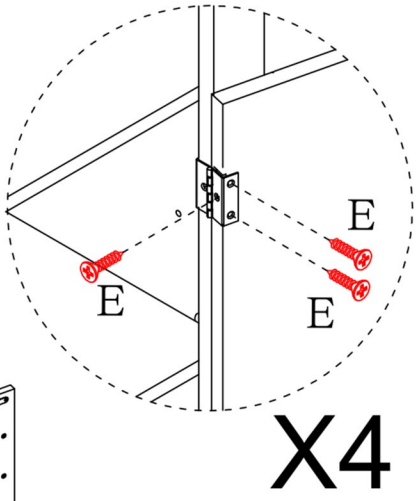

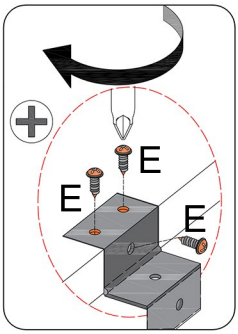



step 23 ---Install the Backplate buckle (G)

Use screw (F) to attach Backplate buckle (G) to Back panel (13&14&15) as shown,tighten it with screwdriver.

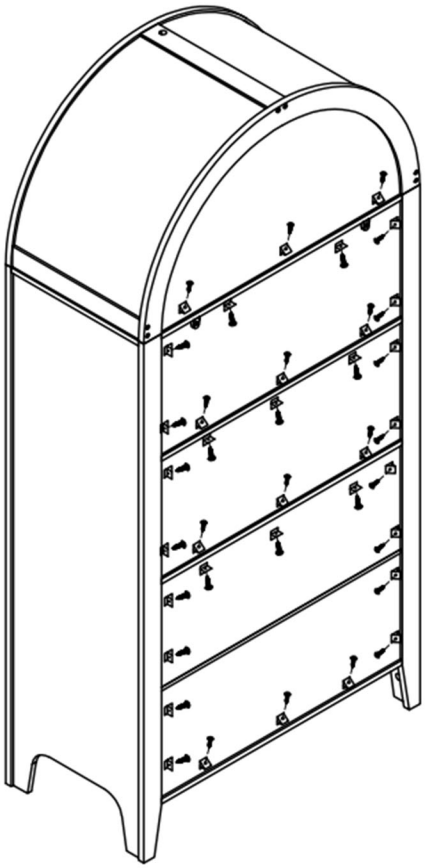

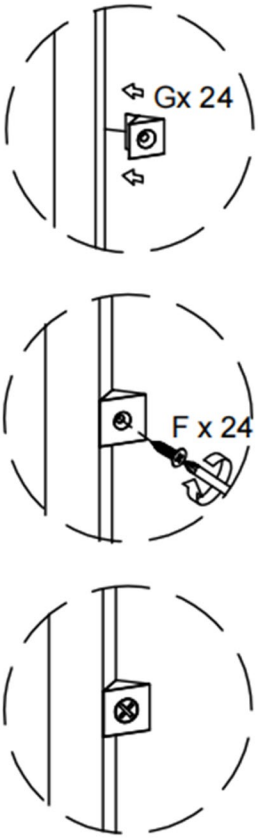



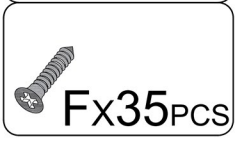

step 24 ---Install the Anti-falling hardware

In order to fix the cabinet to the wall.
First move the cabinet against the wall, then hold the Iron Plates (J1) near the back-top edge of the cabinet to determine position, and mark the positions on the wall with a pencil.Use a drill or powertool to make holes at the marked spots (For at least 30 mm depth).Hammer the Wall Plugs (J4) into the drilled holes until flush.Insert the screw (J2) through Iron Plate (J1) and tighten into the Wall Plugs (J4).

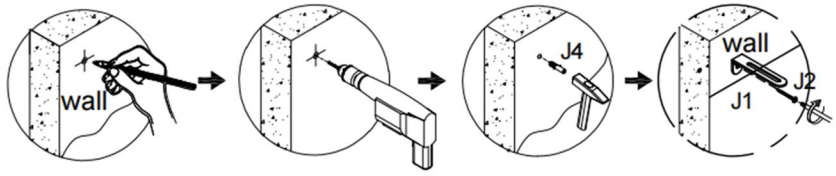

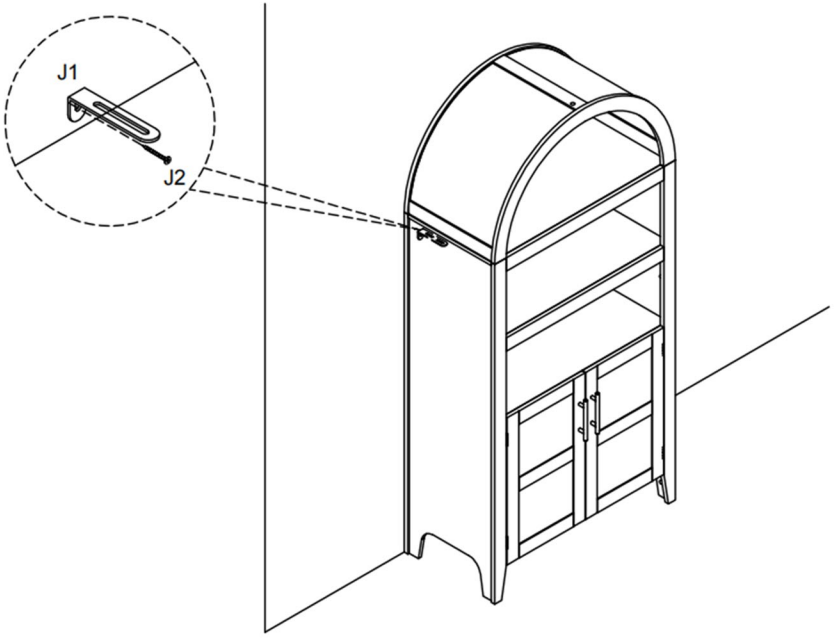

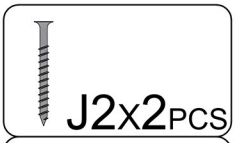



step 25 ---Assembly complete

Congratulations! You have finished the assembly, thank you again for choosing our product! Please enjoy!

