User Manual

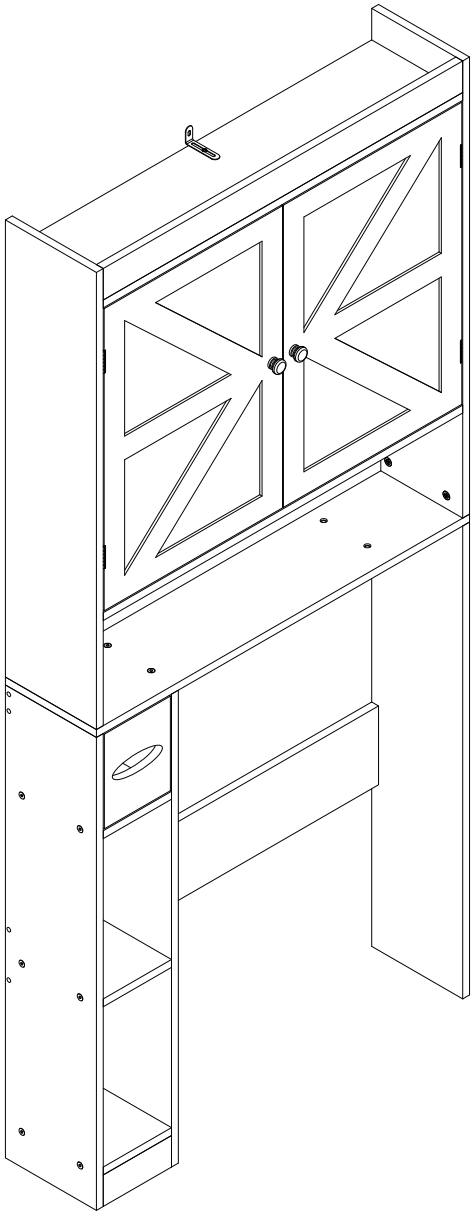

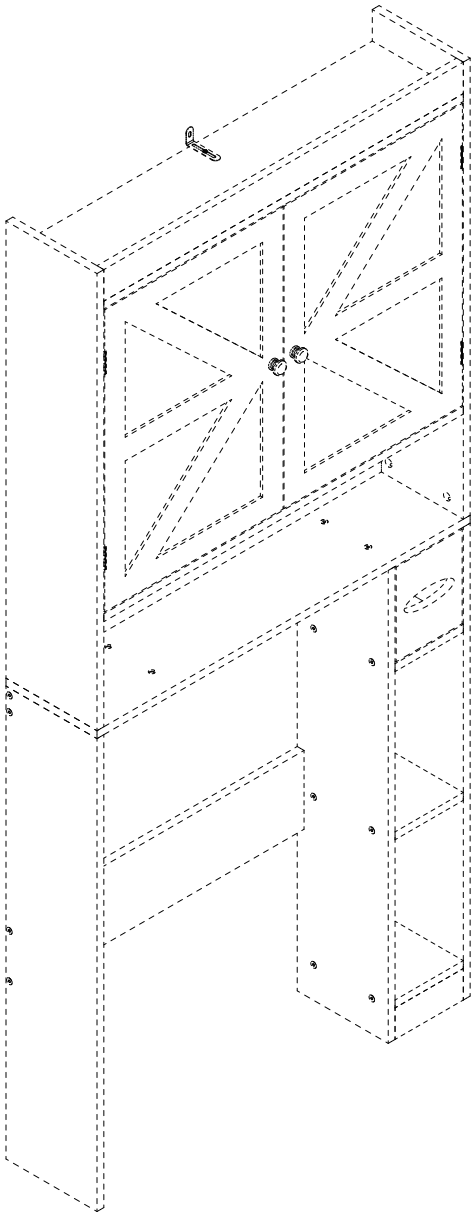

2 PERS.

45 MIN

€ $ £

① x1 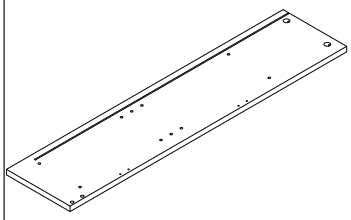 870x200x15mm	② x1 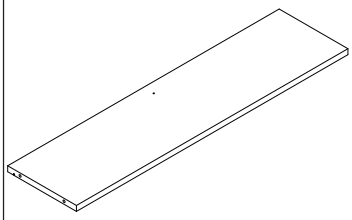 790x200x15mm	③ x1 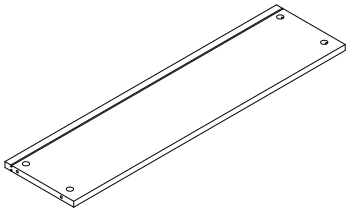 790x200x15mm	④ x1 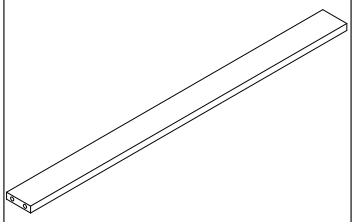 790x60x15mm
⑤ x1 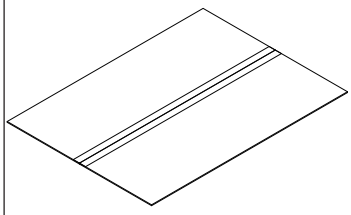 798x588x3mm	⑥ x1 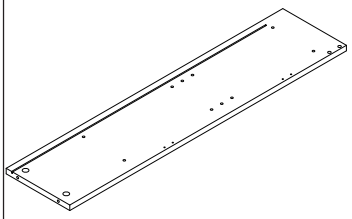 870x200x15mm	⑦ x1 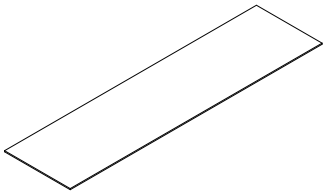 798x208x3mm	⑧ x1 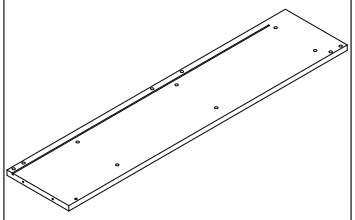 900x200x15mm
⑨ x1 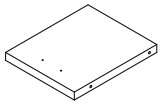 180x150x15mm	⑩ x1 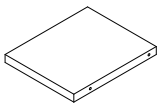 180x150x15mm	⑪ x1 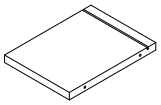 200x150x15mm	⑫ x1 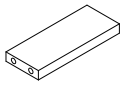 150x60x15mm
⑬ x1 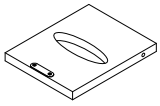 180x145x15mm	⑭ x1 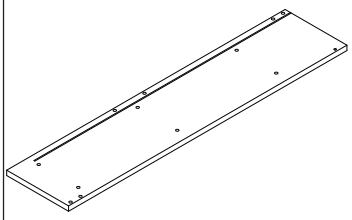 900x200x15mm	⑮ x1 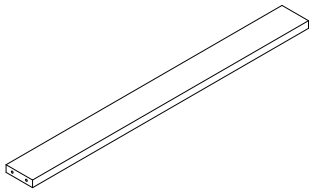 625x60x15mm	⑯ x1 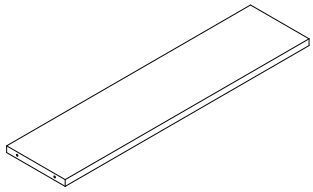 625x150x15mm
⑰ x1 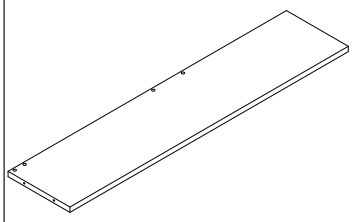 900x200x15mm	⑱ x1 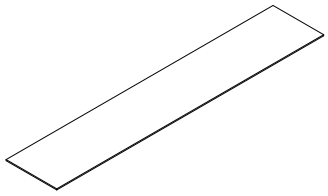 833x158x3mm	⑲ x1 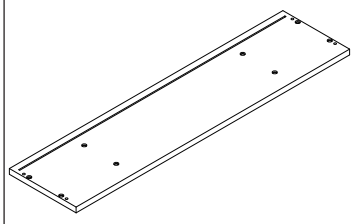 820x200x15mm	⑳ x1 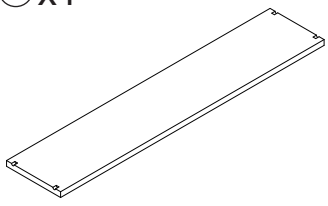 787x162x15mm
㉑ x1 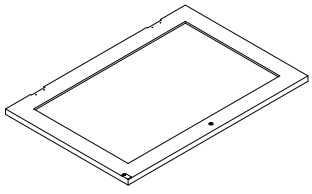 575x392x15mm	㉒ x1 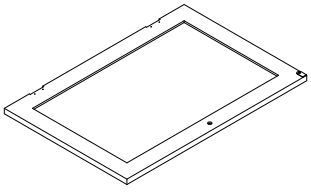 575x392x15mm		

PART LIST

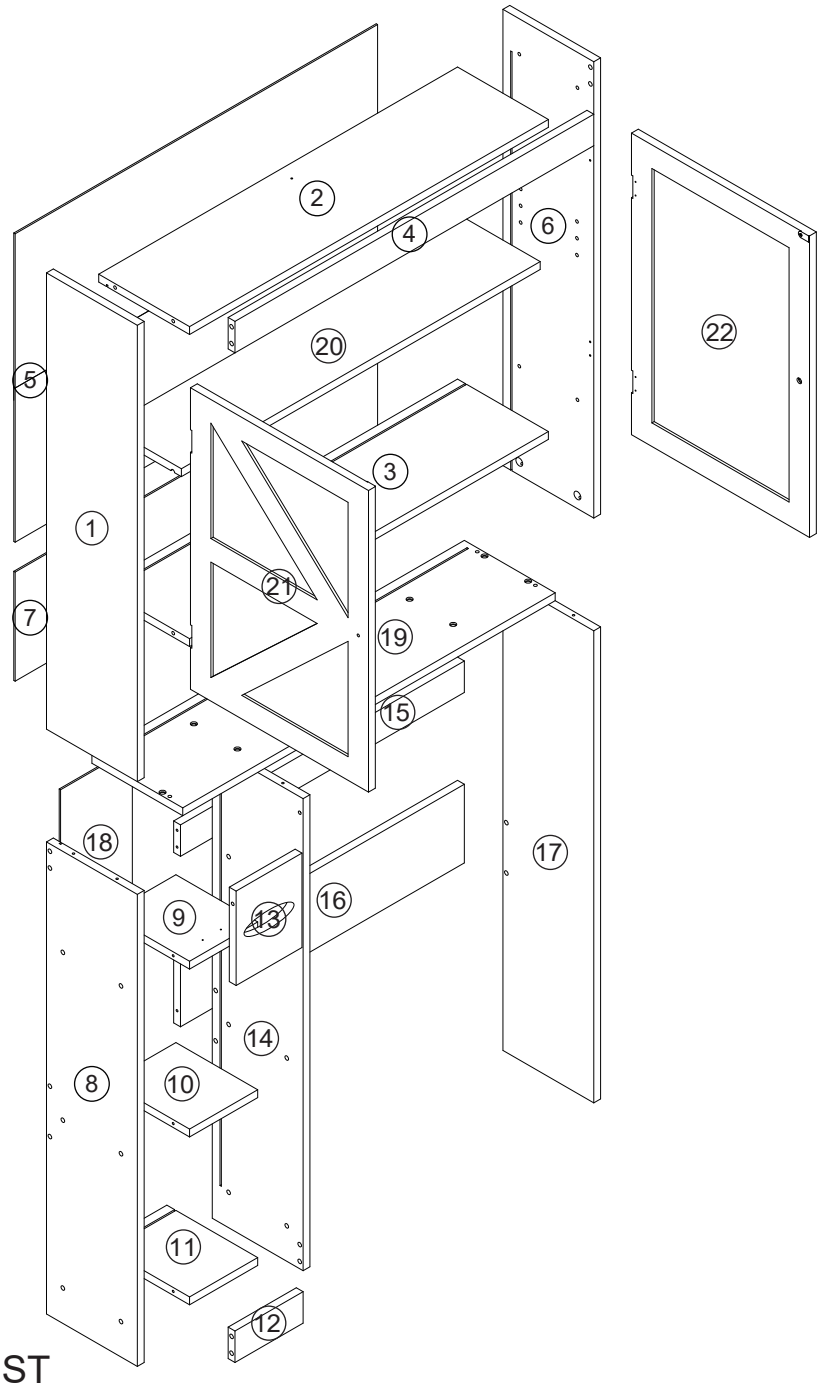

HARDWARE LIST

Ax8 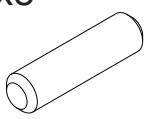	Bx12 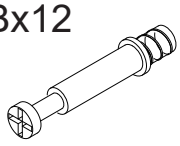	Cx12 	Dx2 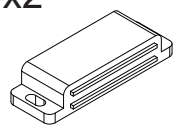	Ex4  M3x14mm	Fx26 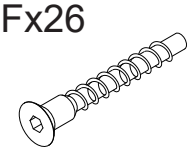
Gx1 	Hx6 	Ix4 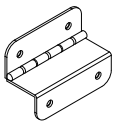	Jx16  M3x12mm	Kx2 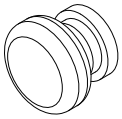	Lx2 
Mx1 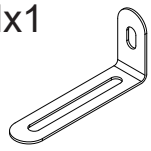	Nx1  M3x12mm	Ox1 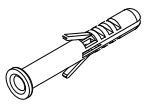	Px1 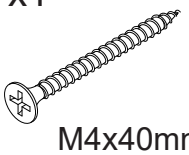 M4x40mm		

STEP 1

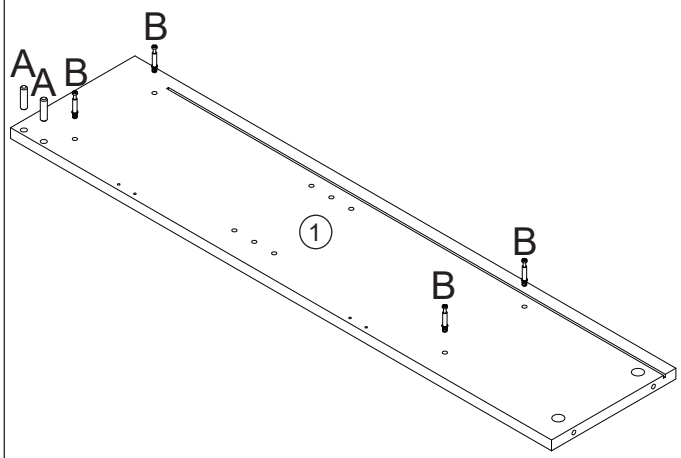

Ax2
Bx4

STEP 2

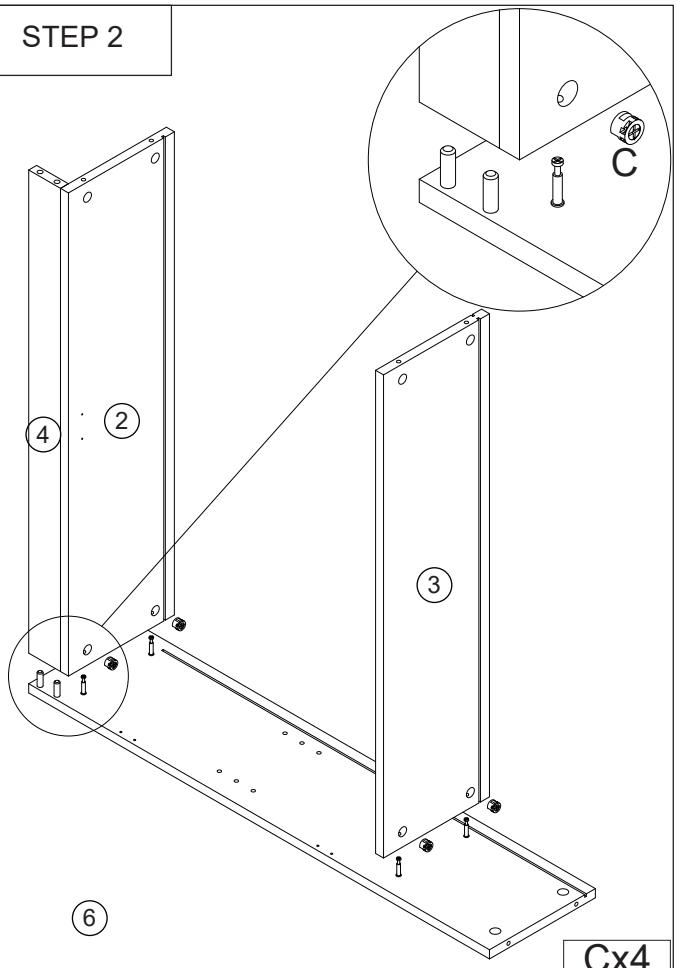

Cx4

STEP 3

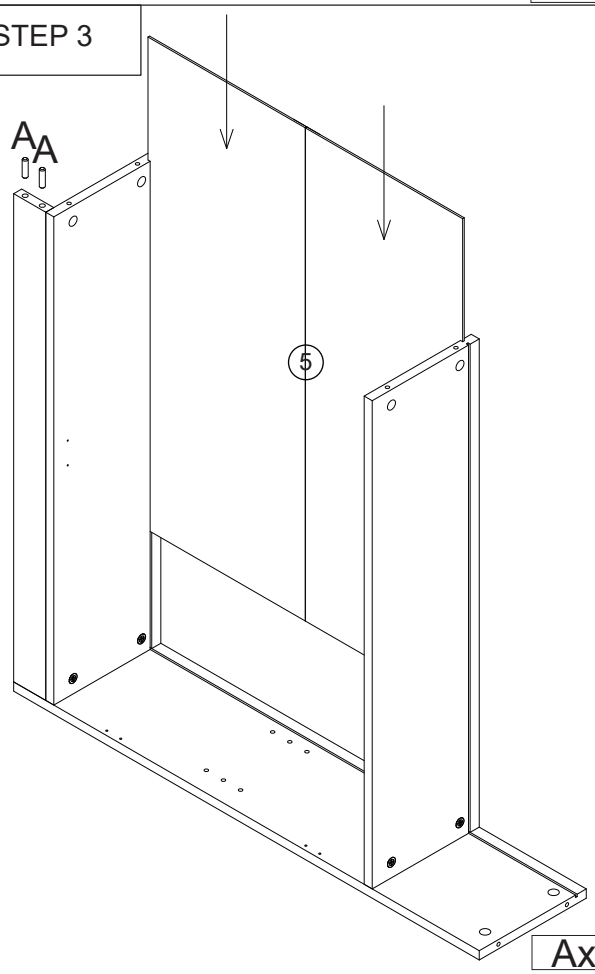

Ax2

STEP 4

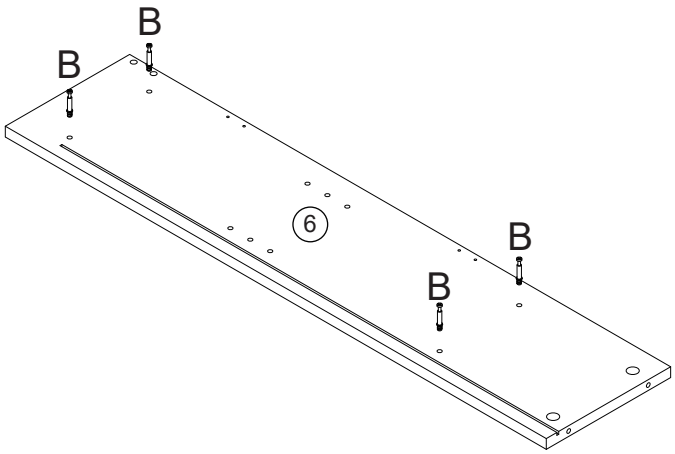

Bx4

STEP 5

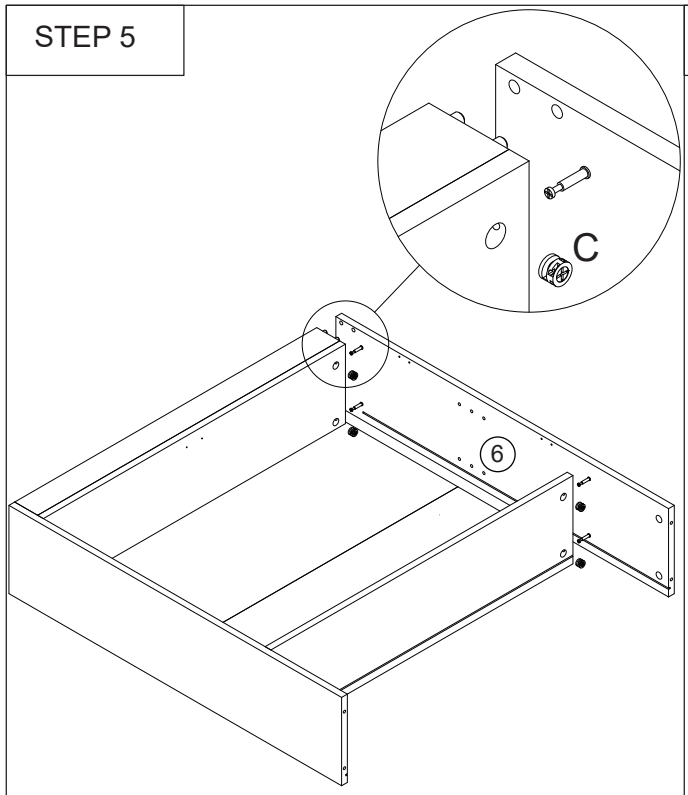

Cx4

STEP 6

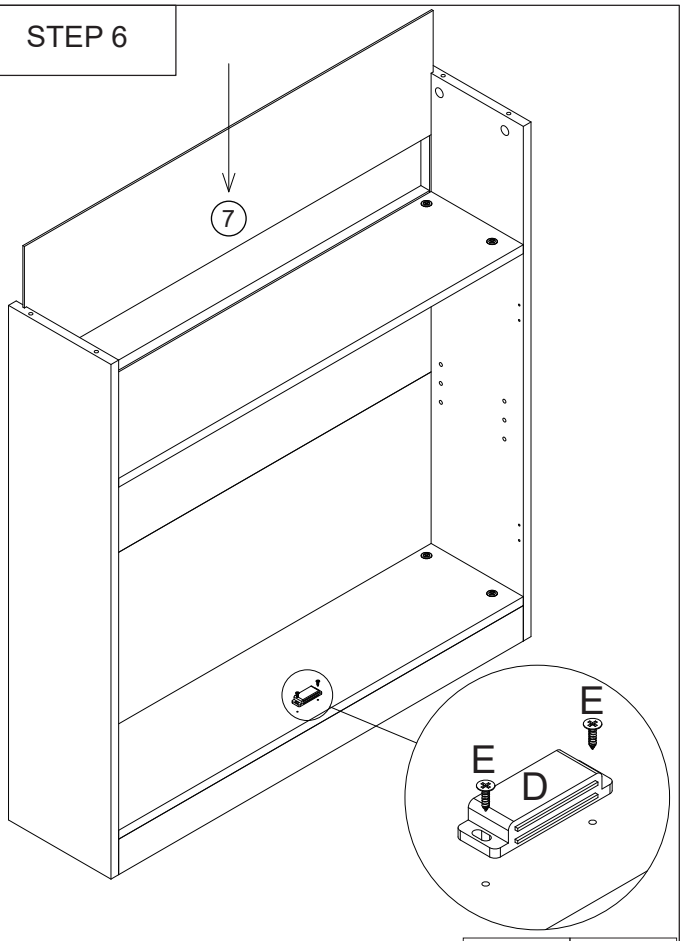

Dx1	Ex2

STEP 7

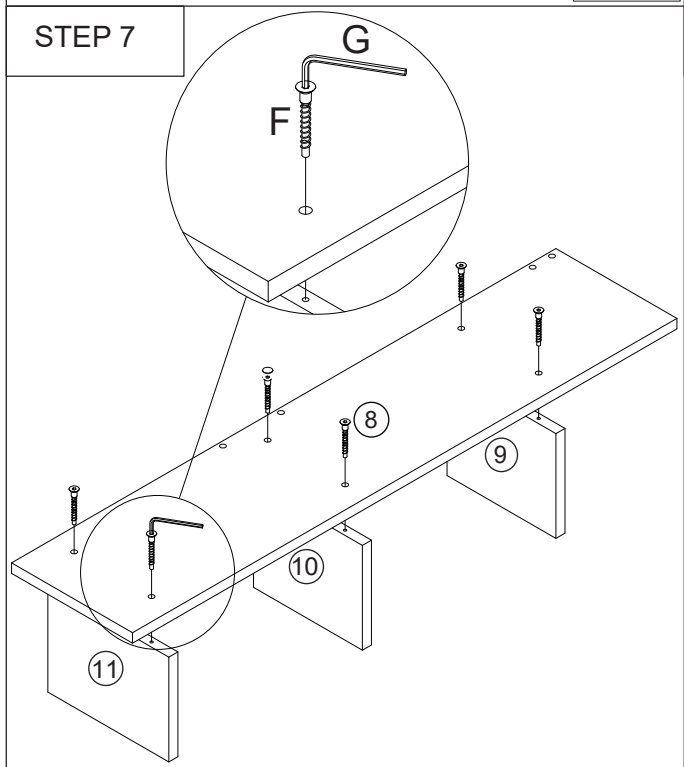

Fx6
Gx1

STEP 8

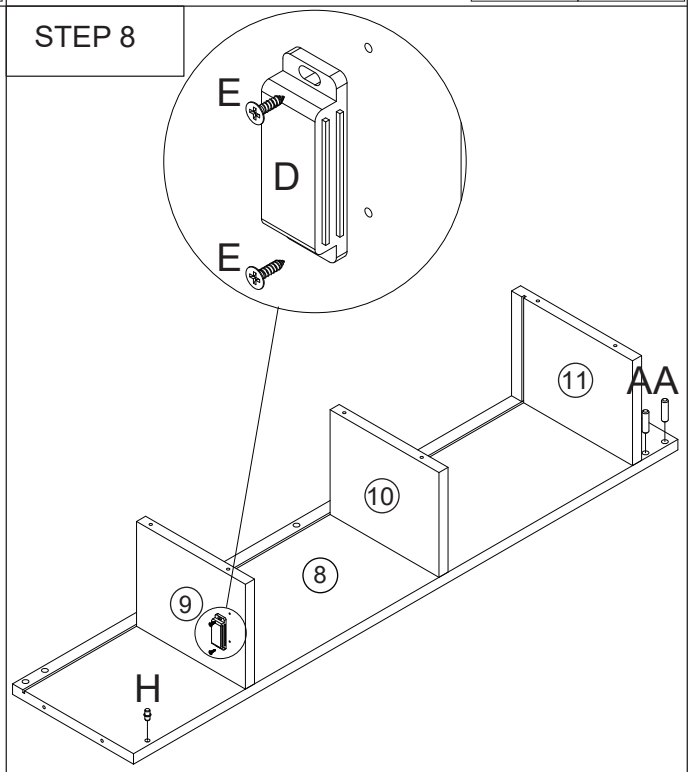

Ax2	Dx1
Ex2	Hx1

STEP 9

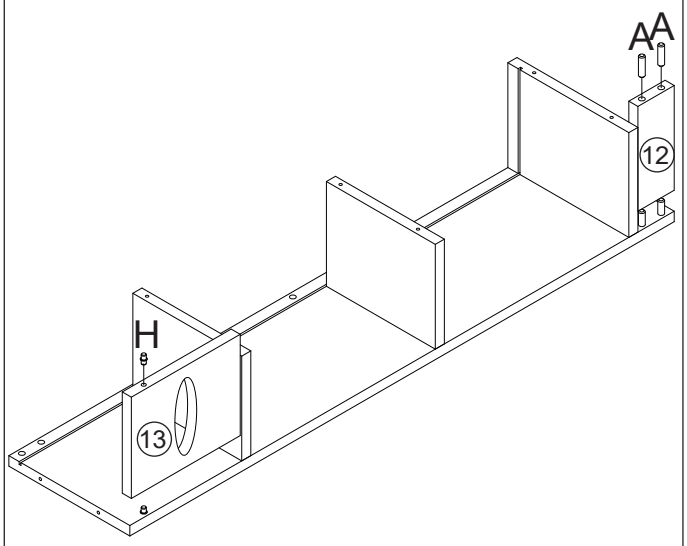

Ax2
Hx1

STEP 10

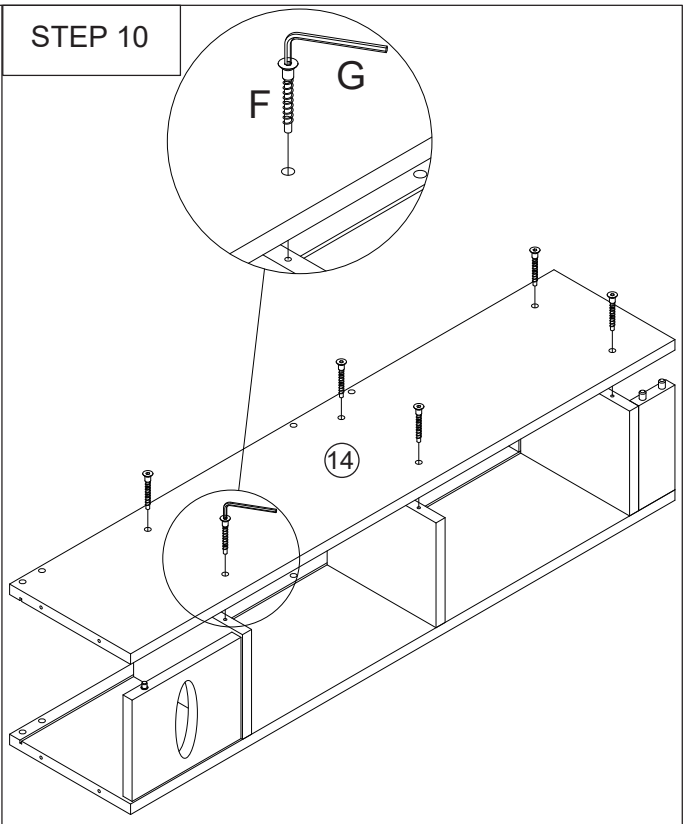

Fx6
Gx1

STEP 11

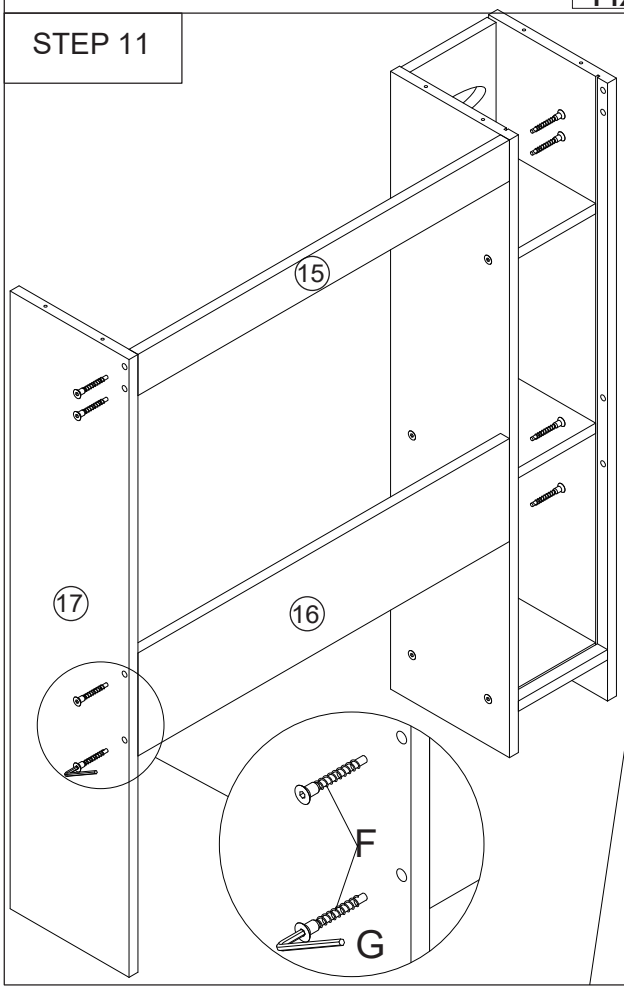

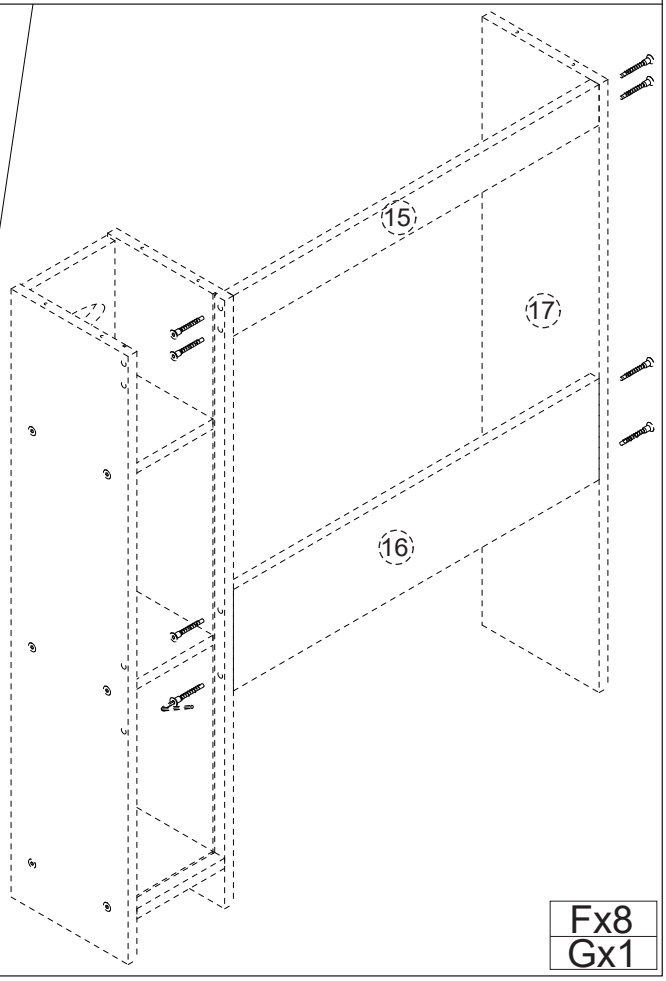

Fx8
Gx1

STEP 12

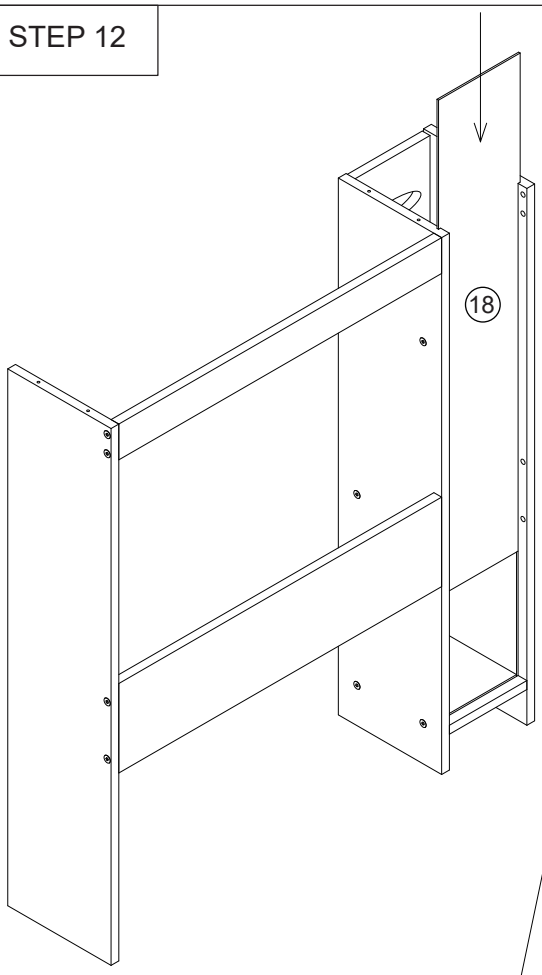

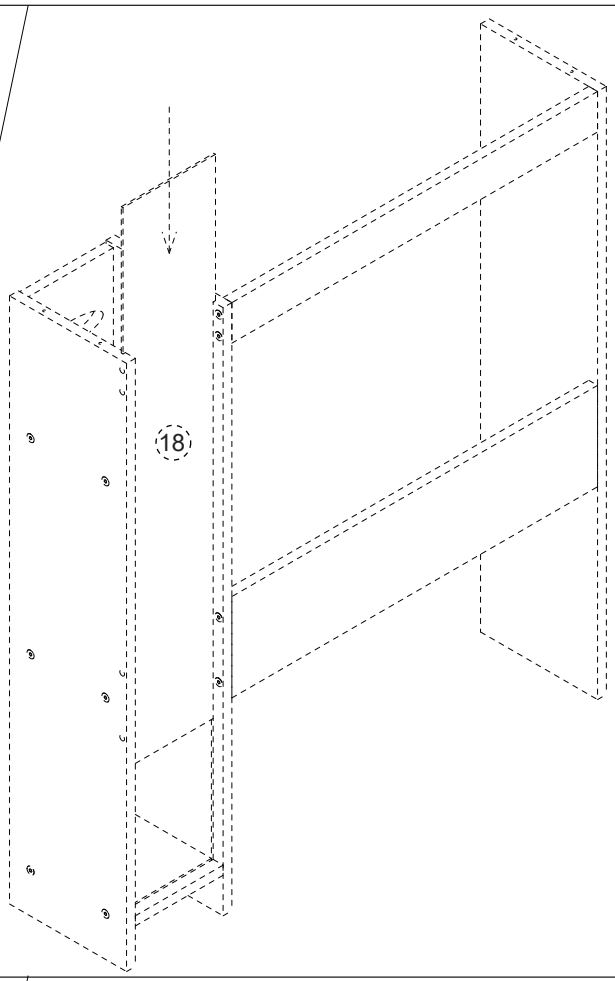

STEP 13

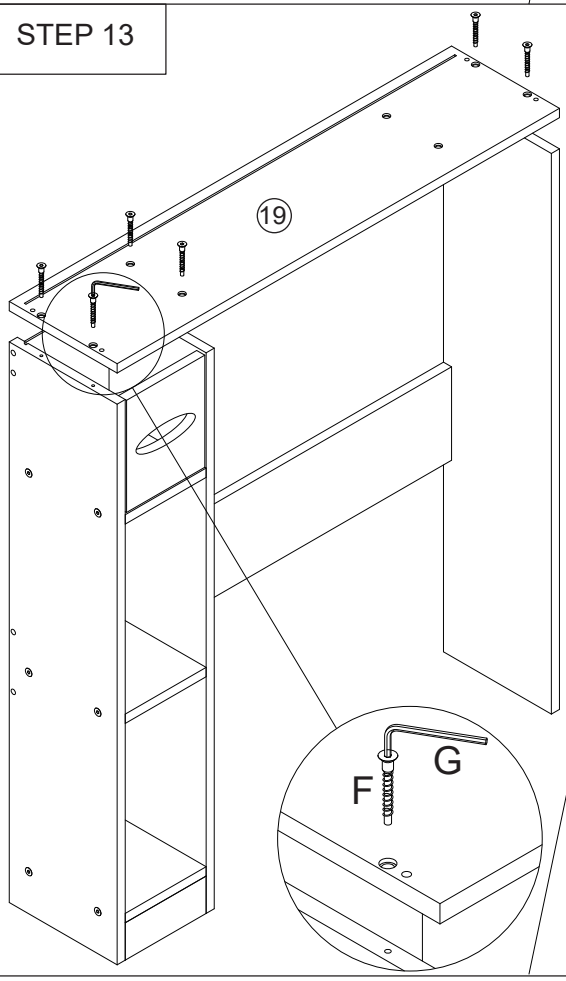

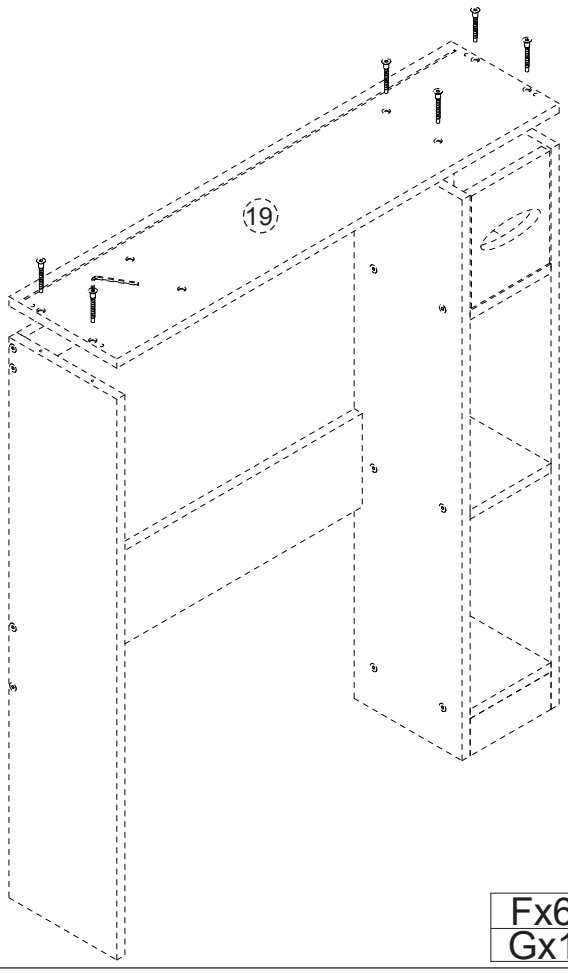

Fx6
Gx1

STEP 14

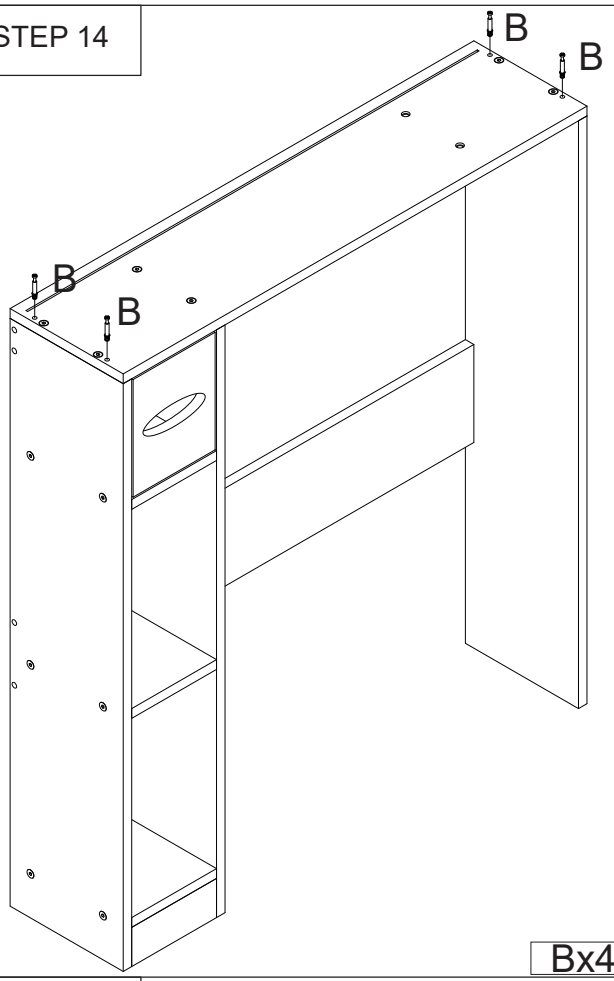

Bx4

STEP 15

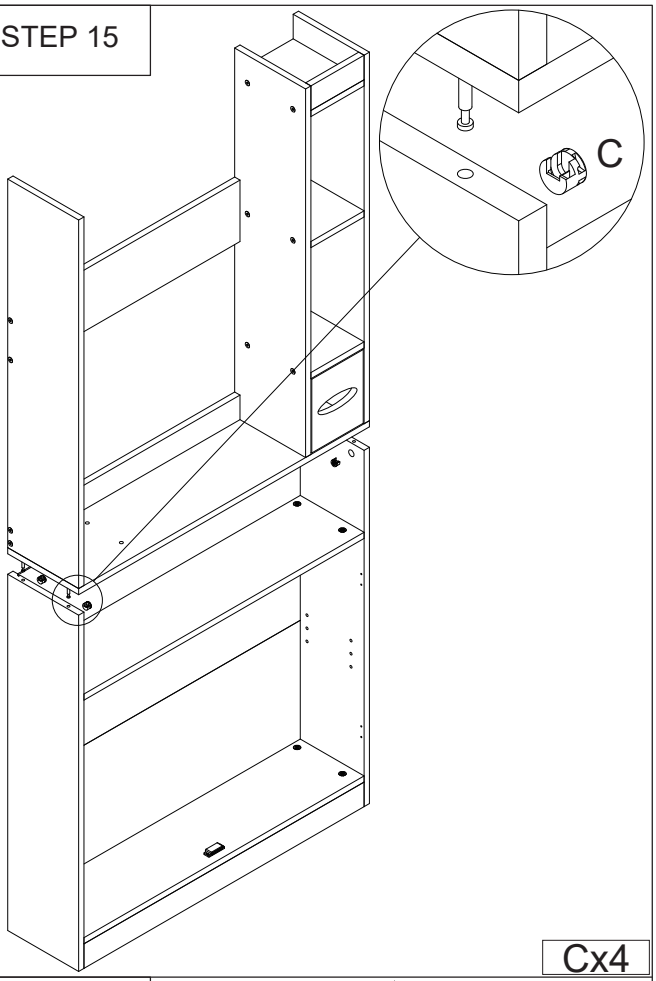

Cx4

STEP 16

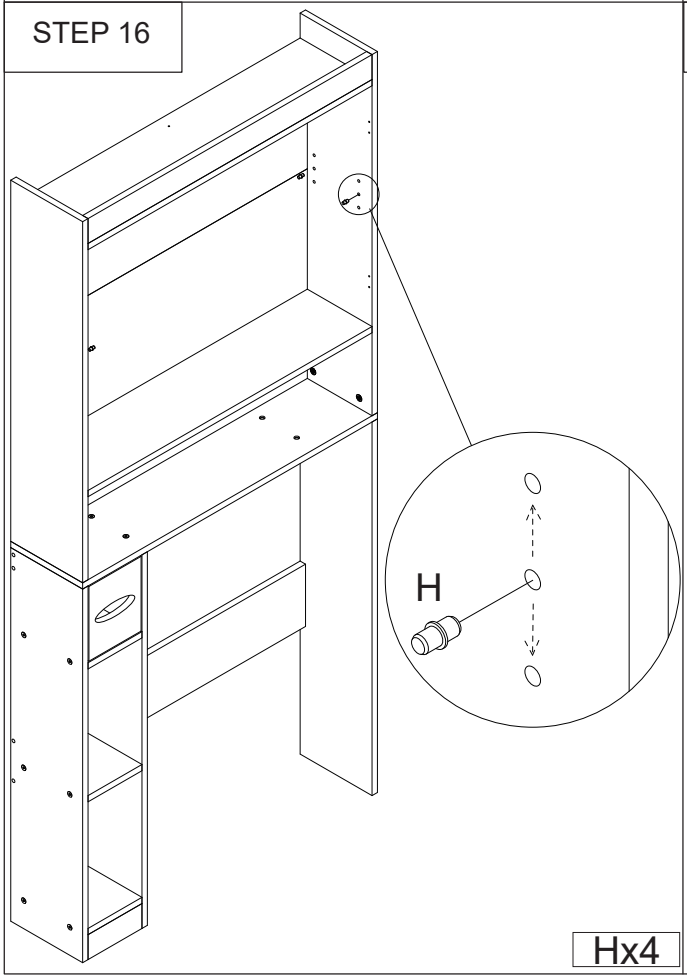

Hx4

STEP 17

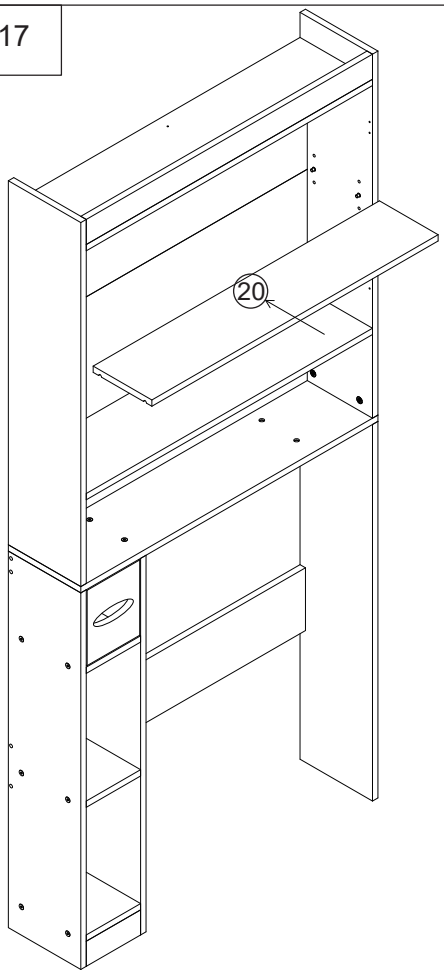

STEP 18

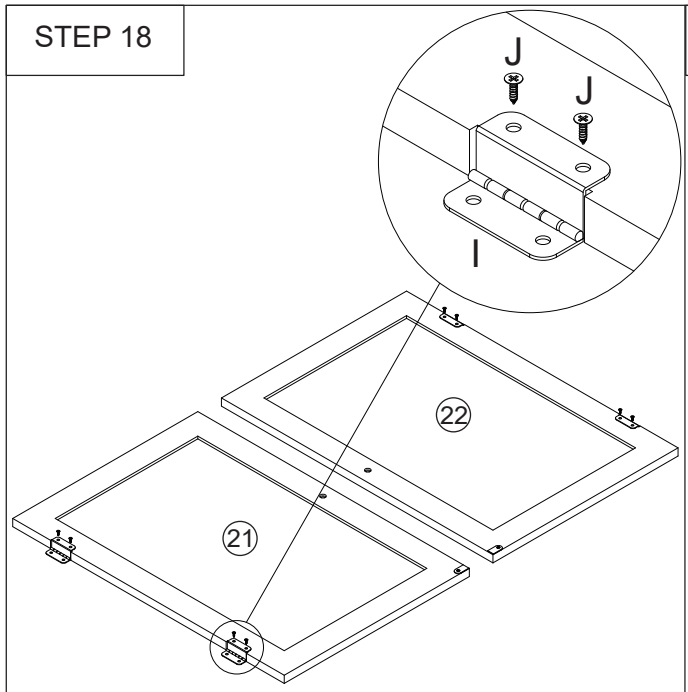

Ix4
Jx8

STEP 19

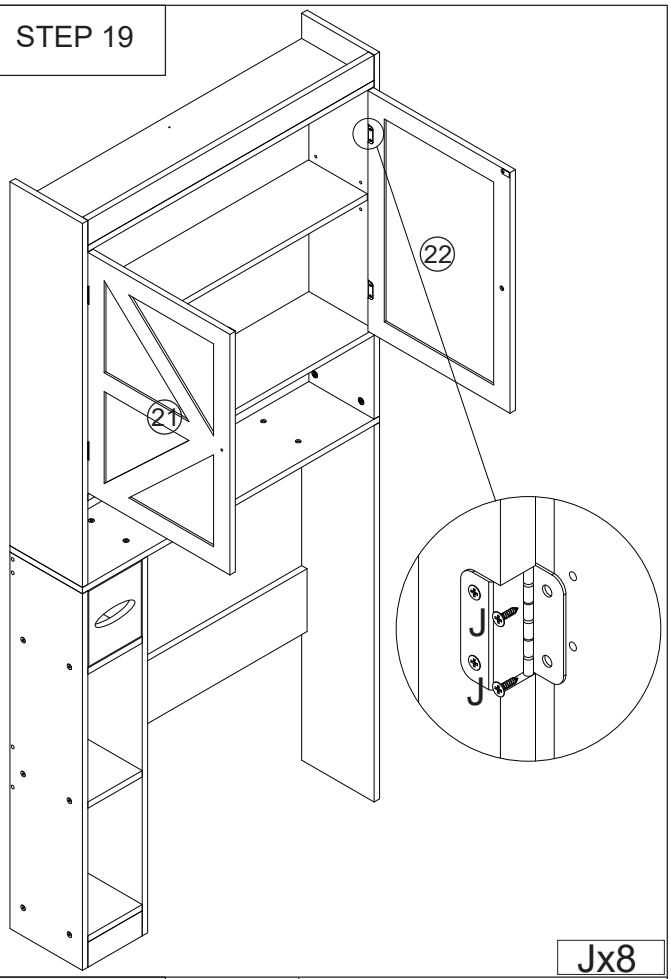

Jx8

STEP 20

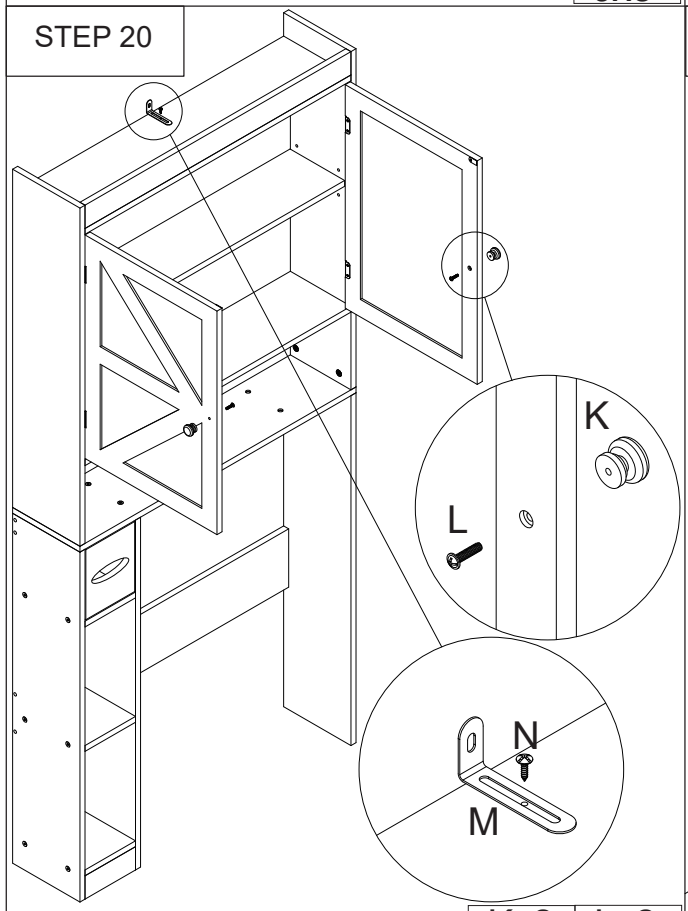

Kx2	Lx2
Mx1	Nx1

STEP 21

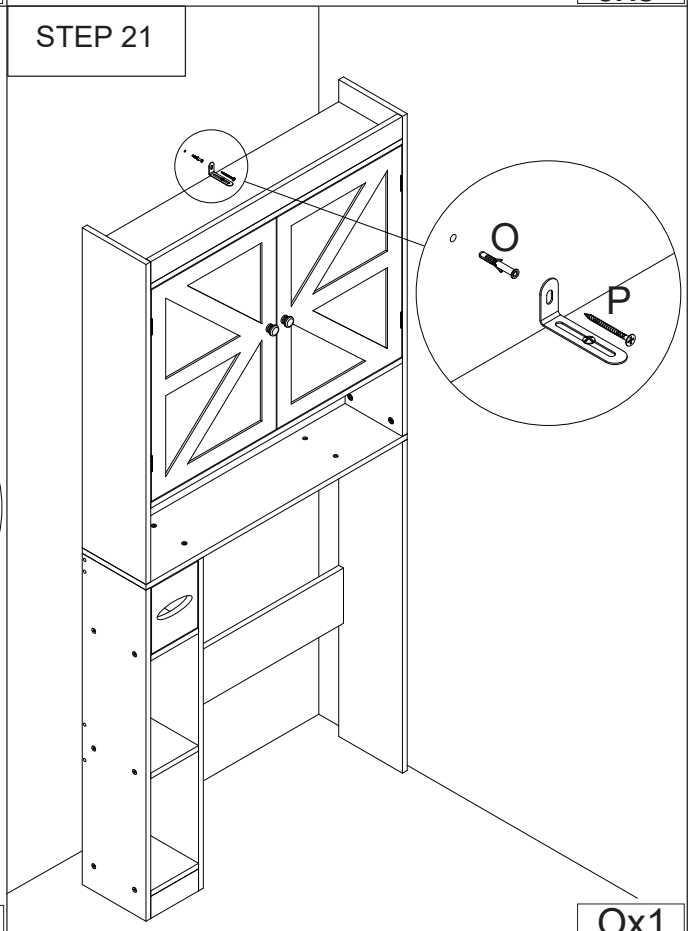

Ox1
Px1

Maintenance Tips !

1. Cleaning: Use a soft, damp cloth to clean your cabinet. Avoid abrasive cleaners or cloths to prevent scratching
2. Avoid Direct Sunlight: Prolonged exposure to sunlight can fade the finish. Position away from windows or use curtains/blinds.
3. Temperature and Humidity: Maintain a stable environment; extreme changes can cause warping or cracking.
4. Weight Limits: Adhere to specified weight limits to avoid bowing or breaking shelves
5. Regular Checks: Periodically tighten loose screws or fittings to ensure stability.
6. Spill Management: Clean spils immediately to prevent stains or damage. Use a dry cloth, then wipe with a damp one if needed.
7. Movement: Empty the cabinet before moving to avoid damage. Lift and carry it rather than dragging

Warnings

1.Assembly:Assemble according to instructions to avoid instability and injury.
2.Securing: Secure tall or top-heavy cabinet to the wall to prevent tipping.
3. Children: Do not allow children to climb or hang on the cabinet to avoid tipping and injury.
4. Ventilation: Ensure adequate ventilation to prevent moisture buildup, mould, or mildew.
5. Heavy Items: Place heavier items on lower shelves for stability.
6. Flammable Materials: Keep away from open flames or heat sources to prevent fire hazards.
7. Maintenance: Regularly follow maintenance tips to ensure longevity and safe use.